YASKAWA

YASKAWA AC Drive
High Performance Vector Control
A1000

200 V CLASS, 0.4 to 110 kW
400 V CLASS, 0.4 to 630 kW

The Answer

Certified for
ISO9001 and
ISO14001

JQA-0422 JQA-EM0498

The Birth of Yaskawa's Ace Drive

Offering limitless possibilities....

A top quality drive: silent, beautiful, and incredibly powerful. Perfectly designed functions open a new field with A1000. A product only possible from Yaskawa, knowing everything there is to know about the world of drive technology to create the most efficient operation possible with an inverter drive. You just have to try it to know how easy it is to use. High level, Yaskawa quality. Integrating the latest vector control technology in a general-purpose drive with the performance of a higher order demanded by the drives industry. A1000 is the answer to user needs, carrying on the Yaskawa traditions of absolute quality in this next generation product line.

The Answer is

A1000

Contents

Features	4
Features for Every Application	10
Product Lineup	14
Model Selection	15
Software Functions	16
Parameter List	18
Basic Instructions	24
Standard Specifications	26
Standard Connection Diagram	28
Dimensions	30
Fully-Enclosed Design	32
Peripheral Devices and Options	34
Application Notes	56
YASKAWA AC Drive Series	62
Global Service Network	63

The Drive for
a Greener World

Motor Drive Performance
Leading the Pack

Transforming the Application Installation
with Unparalleled Performance

CE c UL us LISTED RoHS compliant

A Motor Drive Performance Leading the Pack

The Most Advanced Drive Technology

Capable of driving any kind of motor.

A1000 runs not only induction motors, but also synchronous motors like IPM and SPM motors with high performance vector control.

Minimize equipment needed for your business by using the same drive to run induction and synchronous motors.

Switch easily between motor types with a single parameter setting.

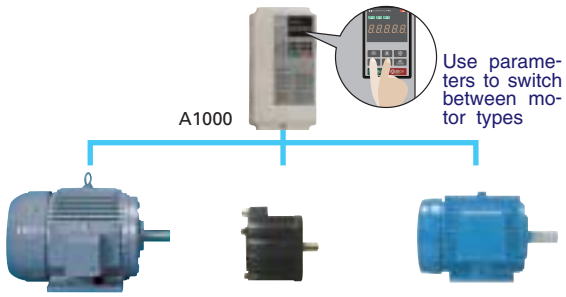

	Synchronous motor (SPM) SMRA Series	Synchronous motor (IPM) Super Energy-Saving Motor
Features	• Ultra-compact, ultra-light • Energy saving, high efficiency • Fully-enclosed fan-less design (no problems with cooling)	• Compact, light • Energy saving, high efficiency • High starting torque without sensors • Positioning capability without sensors
Capacities	200 V: 0.4 to 3.7 kW	200 V: 0.4 to 75 kW 400 V: 0.4 to 300* kW

* 160 kW without PG

Positioning Capability without External Devices Available soon

Use an IPM motor to perform position control—without motor feedback.

Electrical saliency in IPM motors makes it possible to detect speed, direction, and rotor position without the use of extraneous sensors.

Precision positioning functionality without an upper controller.

Visual programming in DriveWorksEZ lets the user easily create a customized position control sequence, without the use of sensors or motor feedback.

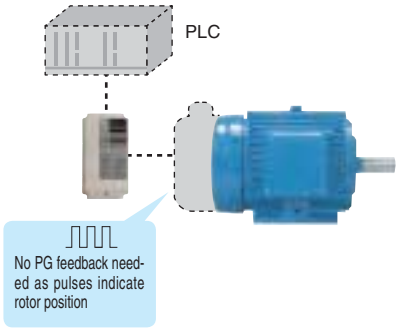

Cutting-Edge Torque Characteristics

Powerful torque at 0 Hz, without the use of sensors or feedback devices

Once out of reach for AC drives, Yaskawa now offers sensorless control with synchronous motors. Achieve even more powerful starting torque at zero speed with an IPM motor.

Synchronous Motor * Proper output torque depends on matching drive and motor capacity.

- Advanced Open Loop Vector for PM motors
  200% rated torque at 0 r/min*, speed range of 1:100
- Closed Loop Vector Control for PM motors
  200% rated torque at 0 r/min*, speed range of 1:1500

Torque characteristics

[Advanced Open Loop Vector Control for PM with an IPM motor]

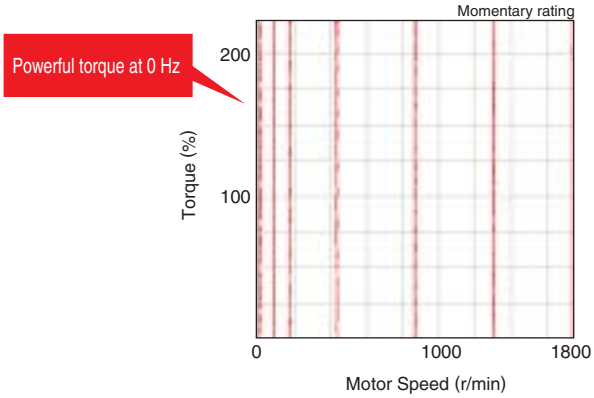

Comparing the speed control range

[Advanced Open Loop Vector Control for PM with an IPM motor]

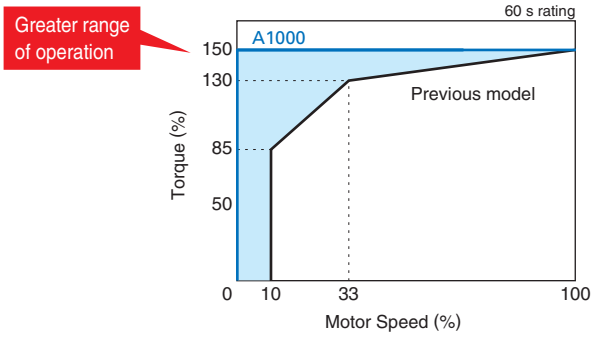

High-performance current vector control achieves powerful starting torque with an induction motor.

Induction Motor * Proper output torque depends on matching drive and motor capacity.

- Open Loop Vector Control
  200% rated torque at 0.3 Hz*, speed range of 1:200
- Closed Loop Vector Control
  200% rated torque at 0 r/min*, speed range of 1:1500

Loaded with Auto-Tuning Features

- Auto-Tuning features optimize drive parameters for operation with induction motors as well as synchronous motors to achieve the highest performance levels possible.

- Perfects not only the drive and motor performance, but also automatically adjusts settings relative to the connected machinery.

  - A variety of ways to automatically optimize drive settings and performance

Tuning the Motor	
Rotational Auto-Tuning	Applications requiring high starting torque, high speed, and high accuracy.
Stationary Auto-Tuning	Applications where the motor must remain connected to the load during the tuning process.
Line-to-Line Resistance Auto-Tuning	For re-tuning after the cable length between the motor and drive has changed, or when motor and drive capacity ratings differ.
Energy-Saving Auto-Tuning	For running the motor at top efficiency all the time.

Tuning the Load	
Inertia Tuning	Optimizes the drive's ability to decelerate the load. Useful for applications using KEB and Feed Forward functions.
ASR Gain Auto-Tuning ✻ Automatic Speed Regulator	Automatically adjusts ASR gain to better match the frequency reference.

- Brand-new Auto-Tuning methods.
  A1000 continuously analyzes changes in motor characteristics during run for highly precise speed control.

Smooth Operation

- Smooth low speed operation thanks to even better torque ripple suppression.

  - Comparing torque ripple at zero speed (Closed Loop Vector)

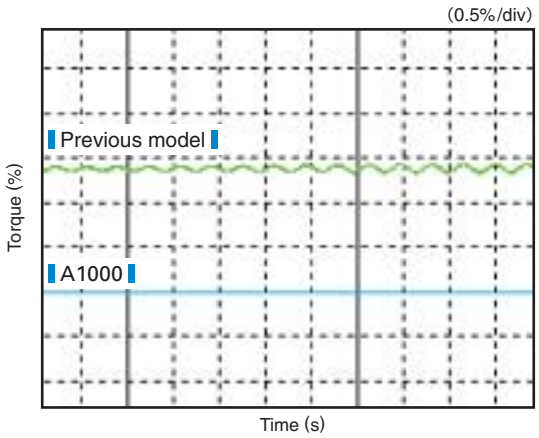

Tackling Power Loss and Recovery

- A1000 offers two ways to handle momentary power loss.

- A1000 is capable of handling momentary power loss with sensorless control for induction motors as well as synchronous motors.

  - Speed Search

    Easily find the speed of a coasting motor for a smooth restart.

    Applications

    Perfect for fans, blowers, and other rotating, fluid-type applications.

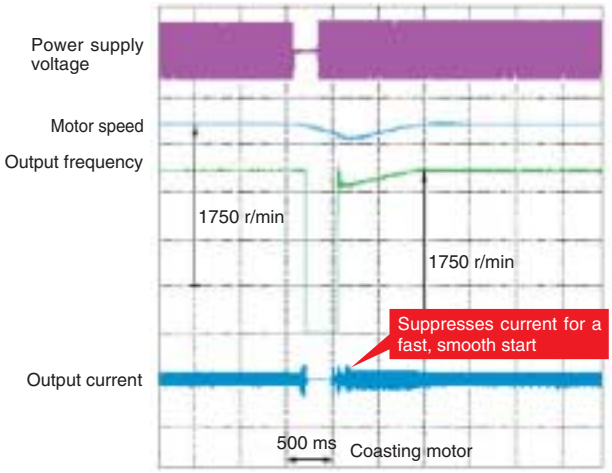

  - KEB Ride-Thru

    Keep the motor running without allowing it to coast.

    Applications

    Highly recommended for film lines and other applications requiring continuous operation.

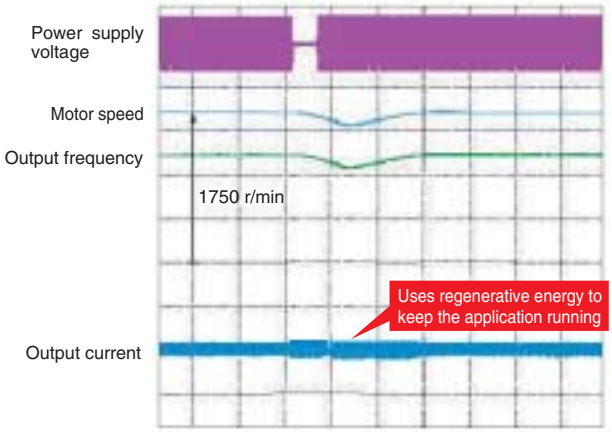

Note: Requires a separate sensor to detect power loss. The drive may trip depending on load conditions, and the motor coast to stop.

- Ride through power loss for up to 2 seconds.
  - Crucial for semi-conductor manufacturers
  - No need to purchase a back-up power supply
  - Detects, outputs an undervoltage signal during power loss

✻ The Momentary Power Loss Recovery Unit option may be required depending on the capacity of the drive.

A The Drive for a Greener World

Energy Saving

Next-Generation Energy Saving

- Loaded with the most advanced energy-saving control technology
  Energy Saving control makes highly efficient operation possible with an induction motor.

- Amazing energy saving with a synchronous motor
  Combining the high efficiency of a synchronous motor along with A1000's Energy Saving control capabilities allows for unparalleled energy saving.

● Efficiency using a motor drive

Example shows a 200 V 3.7 kW drive in a fan or pump application.

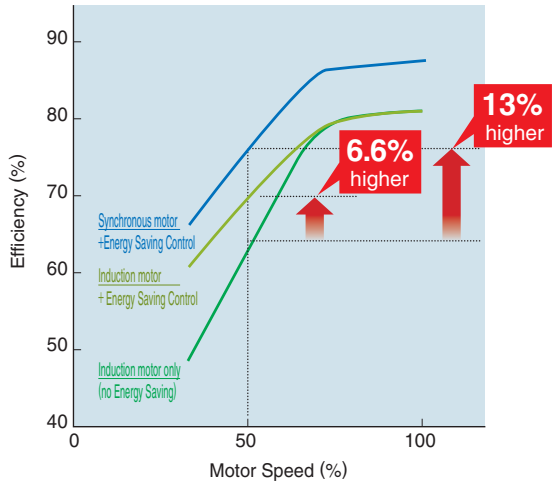

● Examples of energy saving with drives

Conditions

A : Induction motor + A1000

B : IPM motor + A1000

Annual energy savings for an HVAC fan application running 100 3.7 kW motors. Electric costs of 15 cents/kWH, operating 365 days/year

Annual Energy Savings

A : Induction motor + A1000
Power consumption: 1,903,100 kWH
Electrical costs: **$285,500**

B : IPM motor + A1000
Power consumption: 1,754,600 kWH
Electrical costs: **$263,200**

Total Energy Savings **$22,300**

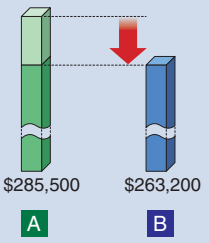

Annual savings on energy costs: (A) vs. (B)
Energy saved: 148,500 kWH
Electrical costs: **$22,300**

Annual reduction in CO_2
148,500 kWH×0.555÷1,000 = **82.4 tons!**
Assumes 1 kWH of power consumed creates 0.555 kg/kWH of CO_2

Environmental Features

Protective Design

- A variety of protective designs are available to reinforce the drive against moisture, dust, oil mist, vibration, corrosive sulfur gas, conductive particles, and other harsh environments.

- IP54 drip-proof and dustproof options are also offered.*

* Available soon

RoHS

- All standard products are fully compliant with the EU's RoHS directive.

RoHS compliant

Noise Reduction

- A1000 uses Yaskawa's Swing PWM function to suppress electromagnetic and audible motor noise, creating a more peaceful environment.

● Comparing our former product line with our new Swing PWM feature

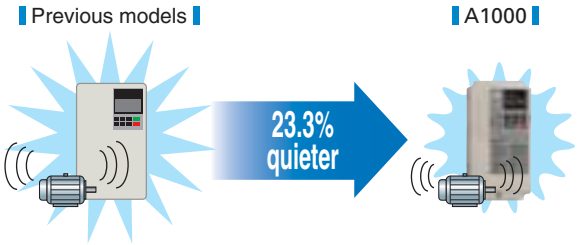

Note: Calculated by comparing peak values during noise generation

Suppressing Power Supply Harmonics

- A DC reactor minimizes harmonic distortion, standard on drives 22 kW and above.

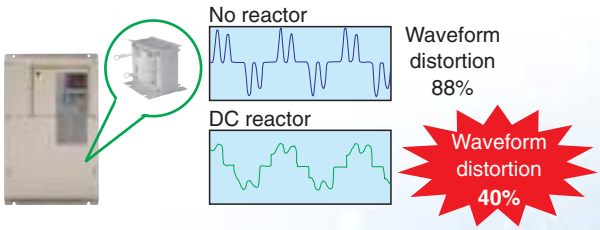

- Yaskawa also offers 12-pulse and 18-pulse rectifier options*, as well as filters to minimize harmonic distortion.

* Available soon. Requires a separate 3-winding or 4-winding transformer.

The Answer is A1000

Safety

Safety Regulations

- All models have a Safe Disable function to stop the motor in accordance with EN954-1 safety category 3, IEC/EN61508 SIL2 requirements.
- An External Device Monitor (EDM) function has also been added to monitor the safety status of the drive.

Safe Disable wiring example

A1000 is equipped with 2 input terminals and a single output terminal for connecting a safe disable device.
Input: Triggered when either terminal H1 or H2 opens.
Output: EDM output monitors the safety status of the drive.

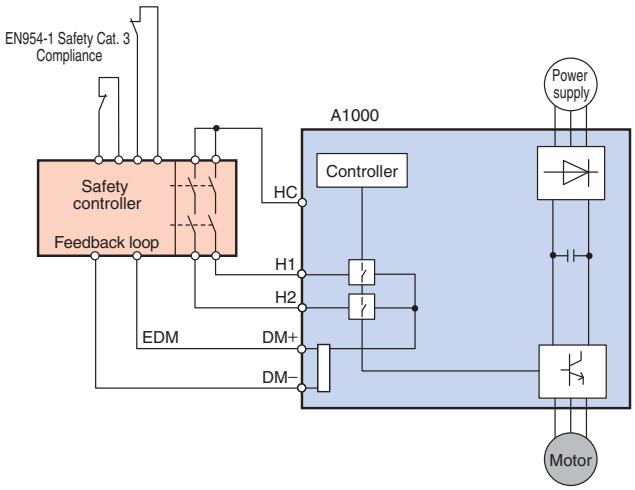

Controlled Stop Despite Power Loss

- Should a power outage occur, A1000 can bring the application to controlled stop quickly and safely using the KEB function.

Quickly ramp to stop with KEB function

Applications

Perfect for spindle drive application and film production lines where stopping methods are crucial to the application to reduce production cost.

Previous model

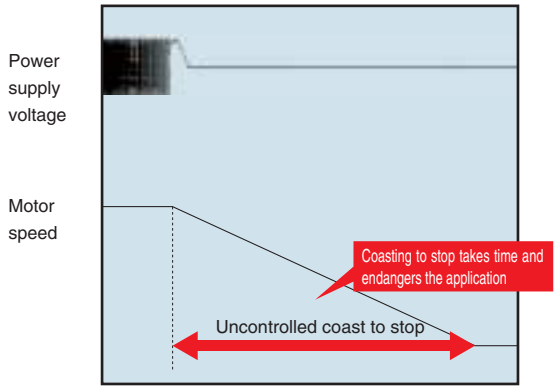

A1000

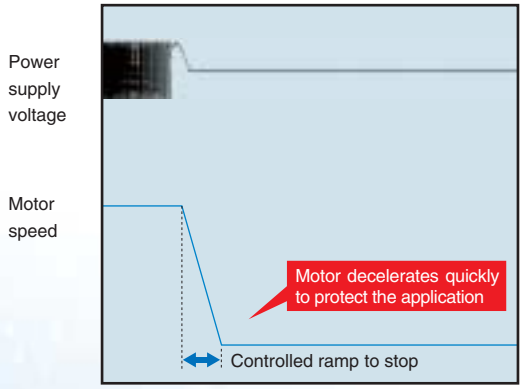

A Transforming the Application Installation with Unparalleled Performance

Even More and More Compact

Yaskawa continues to make applications even smaller by combining the world's smallest drive in its class with the light, efficient design of a synchronous motor.

Comparing drive dimensions

Example: 400 V Class 75 kW

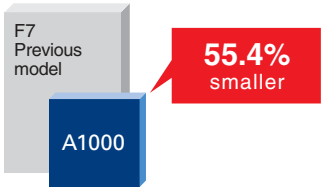

Comparing motor dimensions

Example shows a 200 V 3.7 kW motor

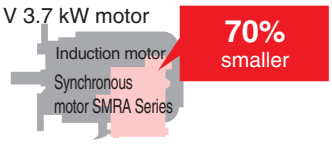

Use Side-by-Side installation* for an even more compact setup.

* For models up to 18.5 kW.

Finless models* also available.

* For release soon

Customize Your Drive

DriveWorksEZ visual programming tool with all models

Simply drag and drop icons to completely customize your drive. Create special sequences and detection functions, then load them onto the drive.

Program a customized sequence

Example: Sensorless positioning control function (Available soon)

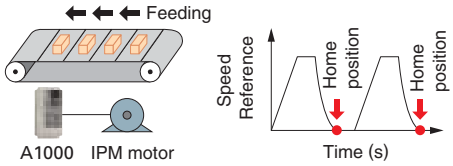

Create customized detection features

Example: Machine weakening analysis using torque pulse detection

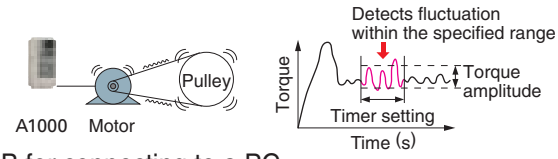

USB for connecting to a PC

USB port lets the drive connect to a PC

Note: Drives are also equipped with an RJ-45 comm. port that takes the existing WV103 cable used in Yaskawa's previous models. Simply remove the operator keypad for to the RJ-45 connector.

Dual Rating allows for an even more compact setup

Each drive lets the user choose between Normal Duty or Heavy Duty operation. Depending on the application, A1000 can run a motor an entire frame size larger than our previous model.

Select the drive rating that best fits the application needs

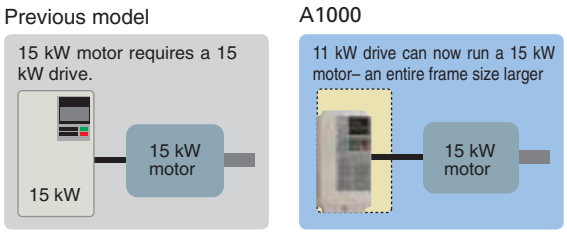

Dual Ratings in A1000

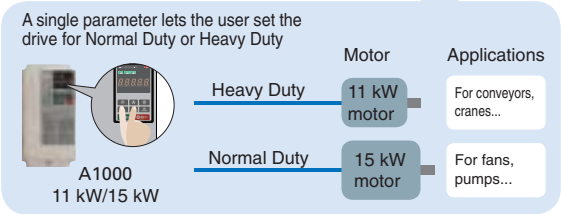

Note: Always select a drive with a current rating greater than the motor rated current.

Breeze-Easy Setup

Immediate setup with Application Presets

A1000 automatically sets parameters needed for most major applications. Simply selecting the appropriate application instantly optimizes the drive for top performance, saving enormous time setting up for a trial run.

Example using Application Presets

Selecting "Conveyor" optimizes five parameter settings so the drive is ready to start running your conveyor application immediately.

Setting	Application
00	General-purpose
01	Water Supply Pump
02	Conveyor
03	Exhaust Fan
04	HVAC Fan
05	Air Compressor
06	Crane (Hoist)
07	Crane (Traverse)

Parameters are programmed automatically	
A1-02	Control mode selection
C1-01	Accel Time 1
C1-02	Decel Time 1
C6-01	ND/HD Selection

Variety of Braking Functions

- Overexcitation deceleration capabilities bring the motor to an immediate stop without the use of a braking resistor.
- All models up to 30 kW are equipped with a braking transistor for even more powerful braking options by just adding a braking resistor.

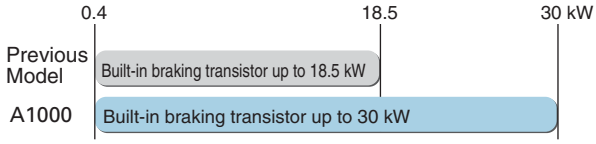

All Major Serial Network Protocols

- RS-422/485 (MEMOBUS/Modbus at 115.2 kbps) standard on all models.
- Option cards available for all major serial networks used across the globe: PROFIBUS-DP*, DeviceNet*, CC-Link*, CANopen*, LONWORKS*, Mechatrolink-Ⅱ*, among others.

  * Registered trademarks of those companies. LONWORKS and Mechatrolink-Ⅱ for release soon
- Less wiring and space-saving features make for easy installation and maintenance.

Long Performance Life

Ten Years of Durable Performance

- Cooling fan, capacitors, relays, and IGBTs have been carefully selected and designed for a life expectancy up to ten years.*

  * Assumes the drive is running continuously for 24 hours a day at 80% load with an ambient temperature of 40˚C.

Motor Life

- Thanks to relatively low copper loss in the rotor and a cool shaft during operation, synchronous motors have a bearing life twice that of induction motors.

Performance Life Monitors

- Yaskawa's latest drive series is equipped with performance life monitors that notify the user of part wear and maintenance periods to prevent problems before they occur.

  - Drive outputs a signal to the control device indicating components may need to be replaced

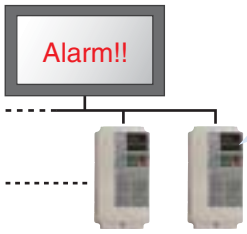

Operator Display	Corresponding Component
LT-1	Cooling fan
LT-2	Capacitors
LT-3	Inrush prevention relay
LT-4	IGBTs

Easy Maintenance

The First Terminal Board with a Parameter Backup Function

- The terminal block's ability to save parameter setting data makes it a breeze to get the application back online in the event of a failure requiring drive replacement.

  - A1000 Terminal Block

Parameter

Name	Number	Setting
ND/HD Selection	C6-01	1
Control Mode Selection	A1-02	0
Frequency Reference Selection 1	b1-01	1
Run Command Selection 1	b1-02	1
⋮	⋮	⋮

Engineering Tool DriveWizard Plus

- Manage the unique settings for all your drives right on your PC.
- An indispensable tool for drive setup and maintenance. Edit parameters, access all monitors, create customized operation sequences, and observe drive performance with the oscilloscope function.
- The Drive Replacement feature in DriveWizard Plus saves valuable time during equipment replacement and application upgrades by converting previous Yaskawa product parameter values to the new A1000 parameters automatically.

  - Drive Replacement Function

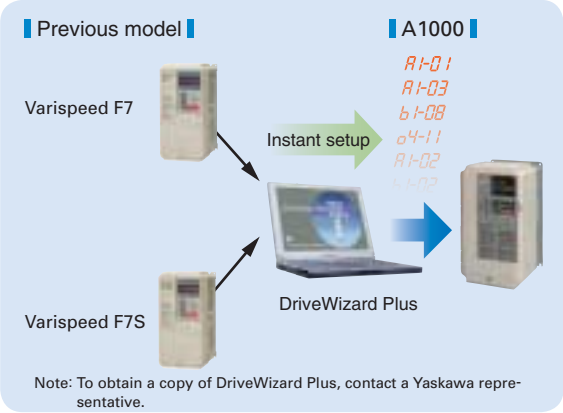

Parameter Copy Function

- All standard models are equipped with a Parameter Copy function using the keypad that allows parameter settings to be easily copied from the drive or uploaded for quick setup.
- A USB Copy Unit is also available as an even faster, more convenient way to back up settings and instantly program the drive.

Features for Every Application

A1000 is loaded with functions to match
the particular needs of every application.

Cranes

Advantages

1 Application Presets
Selecting "Crane" from A1000's Application Presets automatically programs A1000 for optimal performance with crane application. Save valuable setup time and start running immediately.

2 Switch Between Motors
Use the same drive to control one motor for hoisting, another motor for traverse operation. Terminal inputs let the user set up relay to switch back and forth between motors.

3 Powerful Starting Torque
Powerful torque at low speeds ensures the power needed for the application and prevents problems with slipping.

4 Safety Functions
The Safe Disable function comes standard for compliance with various safety regulations.

5 Visual Programming with DriveWorksEZ
Easily customize the drive using a PC.

6 Performance Life Diagnostic Features
A1000 notifies the user or controller when maintenance may be required for certain components such as fan or capacitors.

7 Terminal Block with Parameter Backup Function
The terminal block can be transferred to a new drive keeping all terminal wiring intact, and built-in memory backs up all parameter settings. An incredible time saver when replacing a drive.

Functions

- NEW Application Presets
- Motor 2 Switch
- NEW IM/PM Switch
- Torque Limit
- NEW Overexcitation Braking
- NEW Drive WorksEZ
- Current Vector Control
- Speed Search Function
- Zero Servo Function
- NEW Maintenance Monitors
- Accel/Decel Time Switch
- Torque Detection
- KEB Function

NEW Functions Indicates a new function in A1000

Applications

Hoist, Crane

Shutter Door

Fans and Pumps

Advantages

1 Application Presets

Selecting "Fan" or "Pump" from A1000's Application Presets automatically programs A1000 for optimal performance specific for those applications. Save valuable setup time and start running immediately.

2 Compact Design

Yaskawa offers a compact solution for both drive and motor.

- Dual ratings
  Selecting Normal Duty makes it possible to use a smaller drive.
- Combine with a synchronous motor
  Run a synchronous motor instead of an induction motor for an even more compact installation.

3 Astounding Efficiency

Combine A1000 with a synchronous motor and save on energy costs.

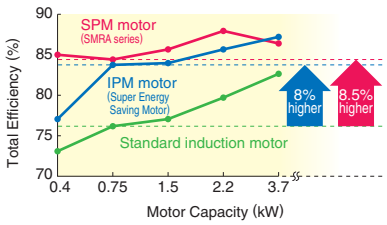

4 Output Power Pulse Monitor

Pulse output feature can send a signal to the PLC to keep track of kilowatt hours. No extra power meter needed.

Note: Cannot legally be used as proof of power consumption.

5 Speed Search

Yaskawa's unique speed search functions easily carry the motor through momentary power loss. No back-up power supply needed to keep the entire application running smoothly.

6 24 V Control Power Supply Option

Lets the user monitor drive data from a PLC even when the power goes out.

7 Terminal Block with Parameter Backup Function

The terminal block can be transferred to a new drive keeping all terminal wiring intact, and built-in memory backs up all parameter settings. An incredible time saver when replacing a drive.

8 Performance Life Diagnostic Features

A1000 notifies the user or controller when maintenance may be required for certain components such as fan or capacitors.

9 Low Harmonic Distortion

DC reactor comes standard on all model above 22 kW to minimize harmonic distortion. This built-in feature saves space and wiring.

Functions

- NEW Application Presets
- NEW IM/PM Switch
- Momentary Power Loss Ride-Thru
- NEW Overexcitation Braking
- NEW Watt-Hour Pulse Monitor
- Frequency Reference Loss
- Accel/Decel Time Switch
- Energy Saving
- Fault Restart
- Speed Search
- NEW Drive WorksEZ
- Overvoltage Suppression
- Frequency Jump
- PID Control
- NEW Overload Fault Prevention
- Frequency Reference Hold
- Torque Detection
- NEW Maintenance Monitors

NEW Functions Indicates a new function in A1000

Applications

HVAC Fan Pump

Features for Every Application

A1000 is loaded with functions to match the particular needs of every application.

Metal Working

Advantages

1 KEB Function
The KEB function can quickly decelerate the motor to stop in case of a power outage, rather than putting equipment at risk by simply allowing the motor to coast. Easy to program to match application needs.

2 Overvoltage Suppression
Particularly beneficial for die cushion and other press-type machinery, overvoltage suppression prevents faults and keeps the application running.

3 Visual Programming with DriveWorksEZ
Easily customize the drive using a PC.

4 Safety Functions
Safe Disable feature comes standard for compliance with various safety regulations.

5 Current Vector Control
Protect connected machinery by controlling torque directly through torque detection and torque limits offered by current vector control.

6 Performance Life Diagnostic Features
A1000 notifies the user or controller when maintenance may be required for certain components such as fan or capacitors.

7 Terminal Block with Parameter Backup Function
The terminal block can be transferred to a new drive keeping all terminal wiring intact, and built-in memory backs up all parameter settings. An incredible time saver when replacing a drive.

Functions

- KEB Function
- NEW Overexcitation Braking
- Pulse Train Input
- Fault Restart
- Speed Search
- Pulse Train Output
- Overvoltage Suppression
- Dwell Function
- Torque Detection
- NEW Overload Fault Prevention
- Current Vector Control
- Torque Limit
- NEW Maintenance Monitors
- NEW Drive WorksEZ
- Zero Servo Function

NEW Functions Indicates a new function in A1000

Applications

Press

Machine Tool

Conveyor Systems

Advantages

1 Application Presets
Selecting "Conveyor" from A1000's Application Presets presets automatically programs A1000 for optimal performance specific for those applications. Save valuable setup time and start running immediately.

2 Safety Functions
Safe Disable feature comes standard for compliance with various safety regulations.

3 Astounding Efficiency
Combine A1000 with a synchronous motor and save on energy costs.

4 Overexcitation Braking
Bring the motor to an immediate stop without the use of a braking resistor (IM motors only).

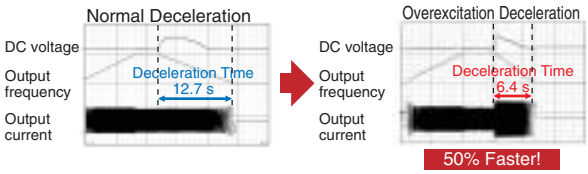

Note: Varies in accordance with motor specifications and load.

5 Visual Programming with DriveWorksEZ
Easily customize the drive using a PC.

6 24 V Control Power Supply Option
Lets the user monitor drive data from a PLC even when the main power is removed.

7 Verify Menu
Quickly reference any settings that have been changed from their original default values.

Changed Value

Name	Parameter	Default	Set Value
Frequency Ref. Selection1	b1-01	1	0
Acceleration Time1	C1-01	10.00 s	15.00 s
Deceleration Time1	C1-02	10.00 s	15.00 s
⋮	⋮	⋮	⋮

8 Performance Life Diagnostic Features
A1000 notifies the user or controller when maintenance may be required for certain components such as fan or capacitors.

9 Low Harmonic Distortion
DC reactor comes standard on all model above 22 kW to minimize harmonic distortion. This built-in feature saves space and wiring.

Functions

- NEW Application Presets
- NEW Drive WorksEZ
- Current Vector Control
- NEW Overexcitation Braking
- PID Control
- NEW Torque Limit
- Droop Control
- Pulse Train Input
- Zero Servo Function
- NEW IM/PM Switch
- Pulse Train Output
- Fault Restart
- NEW Online Tuning
- Torque Detection
- NEW Maintenance Monitors

NEW Functions Indicates a new function in A1000

Applications

Conveyor

Product Lineup

Motor Capacity (kW)	Three-Phase 200 V				Three-Phase 400 V			
	Normal Duty		Heavy Duty		Normal Duty		Heavy Duty	
	Model	Rated Output	Model	Rated Output	Model	Rated Output	Model	Rated Output
0.4			CIMR-AA2A0004	3.2 A			CIMR-AA4A0002	1.8 A
0.75	CIMR-AA2A0004	3.5 A	CIMR-AA2A0006	5 A	CIMR-AA4A0002	2.1 A	CIMR-AA4A0004	3.4 A
1.1	CIMR-AA2A0006	6 A	CIMR-AA2A0008	6.9 A				
1.5	CIMR-AA2A0008	8 A	CIMR-AA2A0010	8 A	CIMR-AA4A0004	4.1 A	CIMR-AA4A0005	4.8 A
2.2	CIMR-AA2A0010	9.6 A	CIMR-AA2A0012	11 A	CIMR-AA4A0005	5.4 A	CIMR-AA4A0007	5.5 A
3.0	CIMR-AA2A0012	12 A	CIMR-AA2A0018	14 A	CIMR-AA4A0007	6.9 A	CIMR-AA4A0009	7.2 A
3.7	CIMR-AA2A0018	17.5 A	CIMR-AA2A0021	17.5 A	CIMR-AA4A0009	8.8 A	CIMR-AA4A0011	9.2 A
5.5	CIMR-AA2A0021	21 A	CIMR-AA2A0030	25 A	CIMR-AA4A0011	11.1 A	CIMR-AA4A0018	14.8 A
7.5	CIMR-AA2A0030	30 A	CIMR-AA2A0040	33 A	CIMR-AA4A0018	17.5 A	CIMR-AA4A0023	18 A
11	CIMR-AA2A0040	40 A	CIMR-AA2A0056	47 A	CIMR-AA4A0023	23 A	CIMR-AA4A0031	24 A
15	CIMR-AA2A0056	56 A	CIMR-AA2A0069	60 A	CIMR-AA4A0031	31 A	CIMR-AA4A0038	31 A
18.5	CIMR-AA2A0069	69 A	CIMR-AA2A0081	75 A	CIMR-AA4A0038	38 A	CIMR-AA4A0044	39 A
22	CIMR-AA2A0081	81 A	CIMR-AA2A0110	85 A	CIMR-AA4A0044	44 A	CIMR-AA4A0058	45 A
30	CIMR-AA2A0110	110 A	CIMR-AA2A0138	115 A	CIMR-AA4A0058	58 A	CIMR-AA4A0072	60 A
37	CIMR-AA2A0138	138 A	CIMR-AA2A0169	145 A	CIMR-AA4A0072	72 A	CIMR-AA4A0088	75 A
45	CIMR-AA2A0169	169 A	CIMR-AA2A0211	180 A	CIMR-AA4A0088	88 A	CIMR-AA4A0103	91 A
55	CIMR-AA2A0211	211 A	CIMR-AA2A0250	215 A	CIMR-AA4A0103	103 A	CIMR-AA4A0139	112 A
75	CIMR-AA2A0250	250 A	CIMR-AA2A0312	283 A	CIMR-AA4A0139	139 A	CIMR-AA4A0165	150 A
90	CIMR-AA2A0312	312 A	CIMR-AA2A0360	346 A	CIMR-AA4A0165	165 A	CIMR-AA4A0208	180 A
110	CIMR-AA2A0360	360 A	CIMR-AA2A0415	415 A	CIMR-AA4A0208	208 A	CIMR-AA4A0250	216 A
	CIMR-AA2A0415	415 A						
132					CIMR-AA4A0250	250 A	CIMR-AA4A0296	260 A
160					CIMR-AA4A0296	296 A	CIMR-AA4A0362	304 A
185					CIMR-AA4A0362	362 A	CIMR-AA4A0414	370 A
220					CIMR-AA4A0414	414 A	CIMR-AA4A0515	450 A
250					CIMR-AA4A0515	515 A		
315							CIMR-AA4A0675	605 A
355					CIMR-AA4A0675	675 A		
450							CIMR-AA4A0930	810 A
500					CIMR-AA4A0930	930 A		
630					CIMR-AA4A1200	1200 A	CIMR-AA4A1200	1090 A

⬚: Available soon

Model Number Key

CIMR- A A 2 A 0004 F A A

AC Drive A1000 Series

Design Revision Order

No.	Region Code
T	Asia
A	Japan

No.	Voltage Class
2	3-phase, 200-240 Vac
4	3-phase, 380-480 Vac

No.	Customized Specifications
A	Standard model

No.	Output Current A
Note: See chart above.	

No.	Enclosure Type
A	IP00
F	NEMA Type1

No.	Environmental Specification
A	Standard
M	Humidity, dust
N	Oil

No.	Environmental Specification
S	Shock, vibration
K	Gas

Note: Contact Yaskawa for more information on environmental tolerance specifications.

Optimizing Control for Each Application

A1000 offers two separate performance ratings: Normal Duty and Heavy Duty.
Heavy Duty is capable of creating more powerful torque, while Normal Duty allows the drive to operate a larger motor.

Difference between load ratings:

	Normal Duty Rating	Heavy Duty Rating
Parameter settings	C6-01=1	C6-01=0 (default)
Overload tolerance	120% for 60 s	150% for 60 s
Carrier frequency	Low carrier frequency (Swing PWM)*	Low carrier frequency

* Use Swing PWM to quiet undesirable motor noise generated when operating with a low carrier frequency.

Normal Duty Applications

●Applications

●Selecting a Drive

For a fan application using a 11 kW motor, select CIMR-AA2A0040 and set it for Normal Duty performance (C6-01 = 1).

Model: CIMR-AA2A0040

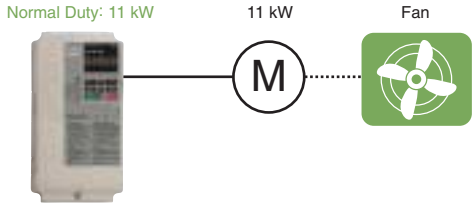

Heavy Duty Applications

●Applications

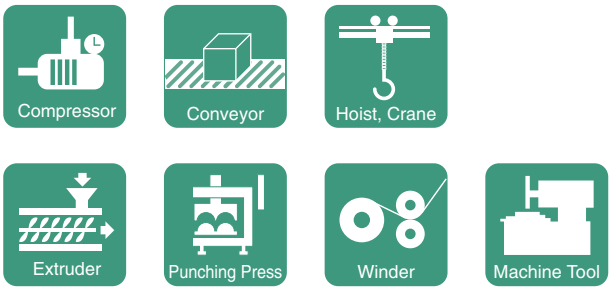

●Selecting a Drive

For a conveyor application using an 11 kW motor, select CIMR-AA2A0056 and set it for Heavy Duty performance (default).

Model: CIMR-AA2A0056

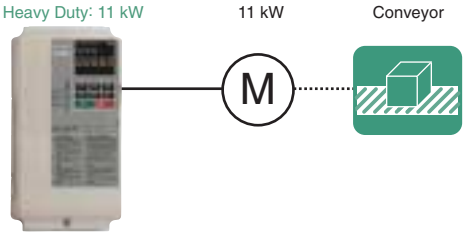

Use the table below to transition from Varispeed F7 and Varispeed F7S to the A1000 series.

Power Supply		200 V			400 V		
Model		Varispeed F7 CIMR-F7A2□□□□	Varispeed F7S CIMR-F7S2□□□□	A1000 CIMR-AA2A□□□□	Varispeed F7 CIMR-F7A4□□□□	Varispeed F7S CIMR-F7S4□□□□	A1000 CIMR-AA4A□□□□
Applicable Motor		Induction Motor	Synchronous Motor	Induction Motor Synchronous Motor	Induction Motor	Synchronous Motor	Induction Motor Synchronous Motor
Max. Applicable Motor Capacity (kW)	0.4	0P4	0P4	0004	0P4	0P4	0002
	0.75	0P7	0P7	0006	0P7	0P7	0004
	1.5	1P5	1P5	0010	1P5	1P5	0005
	2.2	2P2	2P2	0012	2P2	2P2	0007
	3.7	3P7	3P7	0021	3P7	3P7	0011
	5.5	5P5	5P5	0030	5P5	5P5	0018
	7.5	7P5	7P5	0040	7P5	7P5	0023
	11	011	011	0056	011	011	0031
	15	015	015	0069	015	015	0038
	18.5	018	018	0081	018	018	0044
	22	022	022	0110	022	022	0058
	30	030	030	0138	030	030	0072
	37	037	037	0169	037	037	0088
	45	045	045	0211	045	045	0103
	55	–	–	–	055	055	0139
	75	–	–	–	075	075	0165

Software Functions

Loaded with software functions just right for your application.

NEW New Functions — New software available to upgrade from F7 to A1000, automatically matching function and sequence settings.

Note: Major functions listed below.

NEW Application Presets

No need to struggle with difficult parameters and complex calculations.
Parameters are set instantly simply by selecting the appropriate Application Preset.

Functions at Start and Stop

NEW Optimal Deceleration

Optimal deceleration without needing to set the deceleration time.
Drive slows the application smoothly controlling DC bus voltage.

NEW Overexcitation Braking

Perfect for applications with high load inertia that rarely need to be stopped.
Stop quickly: 50% faster without the use of a braking resistor.

Note: Stopping times may vary based on motor characteristics.

Speed Search

Start a coasting motor.
Automatically brings a coasting motor back to the target frequency without the need for extra speed sensors.

Dwell Function

Accelerate and decelerate smoothly with large inertia loads.
Drive prevents speed loss by holding the output frequency at a constant level during acceleration and deceleration.

Accel/Decel Time Switch

Switch easily between accel/decel times.
Switch acceleration and deceleration rates when running two motors from the same drive, or change accel/decel times when operating at high speed.

Reference Functions

Frequency Reference Upper/Lower Limits

Limit motor speed.
Set speed limits and eliminate the need for extra peripheral devices and extraneous hardware.

Frequency Jump

Skip over troublesome resonant frequencies.
Drive can be programmed to avoid machine resonance problems by avoiding constant speed operation at certain speeds.

Frequency Reference Hold

Improved operability.
Momentarily hold the operating frequency during acceleration or deceleration as the load is lowered or raised.

Droop Control

Balances the load automatically between motors.
Calculates the ratio of the load torque and adjusts motor speed accordingly.

Functions for Top Performance

NEW IM/PM Switch

Run both IM and PM motors with a single drive.
The most advanced motor drive technology can run both IM and PM motors, allowing for even greater energy savings and a more compact setup.

NEW Watt-Hour Pulse Monitor

No extra watt hour meter needed.
A pulse output lets the user monitor power consumption.*

* Cannot legally be used as proof of power consumption.

Energy Saving

Automatically runs at top efficiency.
The drive supplies voltage to the motor relative to the speed and load so that the application is for operating at the most efficient level.

NEW Online Tuning

Enables high-precision operation.
Automatically adjusts resistance between motor conductors during operation, thus improving speed accuracy when there are motor temperature fluctuations. This function is active only for Open Loop Vector Control.

Current Vector Control

Achieve high levels of performance.
The drive comes with current vector control capabilities for high performance applications.

NEW Drive WorksEZ

Customize the perfect drive to fit your needs.
Upper controller circuitry and drive I/O terminals can be programmed so that extra hardware is no longer needed. Drag-and-drop. Visual programming makes customization a breeze.

PID Control

Automatic PID control.
The internal PID controller fine-tunes the output frequency for precise control of pressure, flow, or other variables.

Motor 2 Switch

One drive runs two motors.
Use a single drive to operate two different motors. Only one PM motor may be used.

Pulse Train Input

Improved operability.
Use the Pulse Train Input to control not only the frequency reference, but also PID feedback and PID input.

Pulse Train Output

Improved monitor functions.
Pulse output lets the user observe everything from the frequency reference and output frequency to motor speed, softstart output frequency, PID feedback, and PID input.

Torque Detection

Protects the load and helps ensure continuous operation.
An output terminal is triggered when motor torque rises above or falls below a specified level. Useful as an interlock signal for protecting equipment when blade problems arise in a machine tool application or for detecting a broken belt.

Torque Limit

Better reliability: Keep the application running while protecting the load.
A1000 helps protect your application by restricting the amount of torque the motor can create.

Torque Control

Freely adjust torque levels with an external reference signal.
Perfect for tension control in winders and assisting torque followers.

Feed Forward Control

Optimizes speed changes when working with high-inertia loads.
Estimates the acceleration/deceleration torque required for the change in speed, and then recalculates the torque reference.

NEW **Inertia Tuning**

Automatically optimize ASR settings for superior responsiveness.
Optimizes the drive's ability to decelerate the load. Useful for applications using KEB and Feed Forward functions.

Speed Search Function

Automatically switches to line power.
Switches operation between line power and inverter drive operation without stopping the motor.

Timer Function

No need for extra hardware.
Control timing by opening and closing the output signal relative to the input signal.

Zero Servo Control

Locks the motor at zero speed.
Holds the motor solidly at 0 Hz, regardless of external influences on the load.

NEW **Carrier Frequency**

Set the carrier frequency to best match application needs.
Reduces noise and resonance in the both the motor as well as the mechanical system.The Swing PWM feature can be used to minimize audible motor noise.

Continuous Run during Reference Loss

Keeps the application running.
Maintains continuous operation even if the controller fails or frequency reference is lost. An indispensable feature for large HVAC applications.

Fault Restart

Keep running when a fault occurs.
A1000 has full self-diagnostic features and can restart the application in the event of a fault. Up to 10 restarts possible.

Protective Functions

Momentary Power Loss Ride-Thru

Keep running even during a momentary loss in power.
A1000 automatically restarts the motor and keeps the application going in the event of a power loss.

Overvoltage Suppression

Avoid overvoltage trip.
Effective for punching presses and crank shafts where repetitive motion creates large amounts of regenerative energy. The drive increases or decreases the frequency in correspondence with regen levels to prevent overvoltage from occurring.

NEW **Overload Fault Prevention**

Prevents overload faults to keep the application running at all times.
Ensures continuous operation during sudden changes in the load that may briefly rise above overload levels and would otherwise shut the application down.

Load Speed Display

Monitor actual speed of the motor and load.
Monitors let the user keep track of motor rotations and line speed.

Copy Function

Save parameter setting to the digital operator.
Copy all parameter settings to the operator keypad, and then transfer those settings to another drive. Saves valuable setup and maintenance time.

NEW **Maintenance Monitors**

Notifies the user when maintenance may be required.
An output signal is triggered when certain components such as the cooling fan or capacitors are nearing their expected performance life.

KEB Function

Decelerate to stop when the power goes out.
A1000 uses regenerative energy from the motor to bring the application to a stop, rather than simply letting it coast.

A Parameter List

Refer to the A1000 Technical Manual for details.

Function	No.	Name	Range	Default	Changes during Run
Initialization Parameters	A1-00	Language Selection	0 to 7	1*1	○
	A1-01	Access Level Selection	0 to 2	2*2	○
	A1-02	Control Method Selection	0,1,2,3,5,6,7	2*1	×
	A1-03	Initialize Parameters	0 to 5550	0	×
	A1-04	Password	0 to 9999	0	×
	A1-05	Password Setting	0 to 9999	0	×
	A1-06	Application Preset	0 to 7	0	×
	A1-07	DWEZ Function Selection	0 to 2	0	×
User Parameters	A2-01 to A2-32	User Parameters, 1 to 32	b1-01 to o2-08	*2	×
	A2-33	User Parameter Automatic Selection	0, 1	1*2	×
Operation Mode Selection	b1-01	Frequency Reference Selection 1	0 to 4	1	×
	b1-02	Run Command Selection 1	0 to 3	1	×
	b1-03	Stopping Method Selection	0 to 3*3	0	×
	b1-04	Reverse Operation Selection	0, 1	0	×
	b1-05	Action Selection below Minimum Output Frequency	0 to 3	0	×
	b1-06	Digital Input Reading	0, 1	1	×
	b1-07	LOCAL/REMOTE Run Selection	0, 1	0	×
	b1-08	Run Command Selection while in Programming Mode	0 to 2	0	×
	b1-14	Phase Order Selection	0, 1	0	×
	b1-15	Frequency Reference Selection 2	0 to 4	0	×
	b1-16	Run Command Selection 2	0 to 3	0	×
	b1-17	Run Command at Power Up	0, 1	0	×
DC Injection Braking and Short Circuit Braking	b2-01	DC Injection Braking Start Frequency	0.0 to 10.0	*3	×
	b2-02	DC Injection Braking Current	0 to 100	50%	×
	b2-03	DC Injection Braking Time at Start	0.00 to 10.00	0.00 s	×
	b2-04	DC Injection Braking Time at Stop	0.00 to 10.00	*3	×
	b2-08	Magnetic Flux Compensation Capacity	0 to 1000	0%	×
	b2-12	Short Circuit Brake Time at Start	0.00 to 25.50	0.00 s	×
	b2-13	Short Circuit Brake Time at Stop	0.00 to 25.50	0.50 s	×
	b2-18	Short Circuit Braking Current	0.0 to 200.0	100.0%	×
Speed Search	b3-01	Speed Search Selection at Start	0, 1	*3	×
	b3-02	Speed Search Deactivation Current	0 to 200	*3	×
	b3-03	Speed Search Deceleration Time	0.1 to 10.0	2.0 s	×
	b3-04	V/f Gain during Speed Search	10 to 100	*4	×
	b3-05	Speed Search Delay Time	0.0 to 100.0	0.2 s	×
	b3-06	Output Current 1 during Speed Search	0.0 to 2.0	*4	×
	b3-10	Speed Search Detection Compensation Gain	1.00 to 1.20	1.05	×
	b3-14	Bi-Directional Speed Search Selection	0, 1	*3	×
	b3-17	Speed Search Restart Current Level	0 to 200	150%	×
	b3-18	Speed Search Restart Detection Time	0.00 to 1.00	0.10 s	×
	b3-19	Number of Speed Search Restarts	0 to 10	3	×
	b3-24	Speed Search Method Selection	0, 1	0	×
	b3-25	Speed Search Wait Time	0.0 to 30.0	0.5 s	×
Delay Timer	b4-01	Timer Function On-Delay Time	0.0 to 3000.0	0.0 s	×
	b4-02	Timer Function Off-Delay Time	0.0 to 3000.0	0.0 s	×
PID Control	b5-01	PID Function Setting	0 to 4	0	×
	b5-02	Proportional Gain Setting (P)	0.00 to 25.00	1.00	○
	b5-03	Integral Time Setting (I)	0.0 to 360.0	1.0 s	○
	b5-04	Integral Limit Setting	0.0 to 100.0	100.0%	○
	b5-05	Derivative Time (D)	0.00 to 10.00	0.00 s	○
	b5-06	PID Output Limit	0.0 to 100.0	100.0%	○
	b5-07	PID Offset Adjustment	−100.0 to 100.0	0.0%	○
	b5-08	PID Primary Delay Time Constant	0.00 to 10.00	0.00 s	○
	b5-09	PID Output Level Selection	0, 1	0	×
	b5-10	PID Output Gain Setting	0.00 to 25.00	1.00	×
	b5-11	PID Output Reverse Selection	0, 1	0	×
	b5-12	PID Feedback Loss Detection Selection	0 to 5	0	×
	b5-13	PID Feedback Low Detection Level	0 to 100	0%	×
	b5-14	PID Feedback Low Detection Time	0.0 to 25.5	1.0 s	×
	b5-15	PID Sleep Function Start Level	0.0 to 400.0	0.0 Hz	×
PID Control	b5-16	PID Sleep Delay Time	0.0 to 25.5	0.0 s	×
	b5-17	PID Accel/Decel Time	0 to 6000.0	0.0 s	×
	b5-18	PID Setpoint Selection	0, 1	0	×
	b5-19	PID Setpoint Value	0.00 to 100.00	0.00%	×
	b5-20	PID Setpoint Scaling	0 to 3	1	×
	b5-34	PID Output Lower Limit	−100.0 to 100.0	0.0%	○
	b5-35	PID Input Limit	0.0 to 1000.0	1000.0%	○
	b5-36	PID Feedback High Detection Level	0 to 100	100%	×
	b5-37	PID Feedback High Detection Time	0.0 to 25.5	1.0 s	×
	b5-38	PID Setpoint User Display	1 to 60000	dep. on b5-20	×
	b5-39	PID Setpoint Display Digits	0 to 3		×
	b5-40	Frequency Reference Monitor Content during PID	0, 1	0	×
Dwell Function	b6-01	Dwell Reference at Start	0.0 to 400.0	0.0 Hz	×
	b6-02	Dwell Time at Start	0.0 to 10.0	0.0 s	×
	b6-03	Dwell Frequency at Stop	0.0 to 400.0	0.0 Hz	×
	b6-04	Dwell Time at Stop	0.0 to 10.0	0.0 s	×
Droop Control	b7-01	Droop Control Gain	0.0 to 100.0	0.0%	○
	b7-02	Droop Control Delay Time	0.03 to 2.00	0.05 s	○
Energy Saving	b8-01	Energy Saving Control Selection	0, 1	*3	×
	b8-02	Energy Saving Gain	0.0 to 10.0	*3	○
	b8-03	Energy Saving Control Filter Time Constant	0.00 to 10.00	*3 *4	○
	b8-04	Energy Saving Coefficient Value	0.00 to 655.00	*4 dep. on E2-11	×
	b8-05	Power Detection Filter Time	0 to 2000	20 ms	×
	b8-06	Search Operation Voltage Limit	0 to 100	0%	×
Zero Servo	b9-01	Zero Servo Gain	0 to 100	5	×
	b9-02	Zero Servo Completion Width	0 to 16383	10	×
Acceleration and Deceleration Times	C1-01	Acceleration Time 1	0.0 to 6000.0*2	10.0 s	○
	C1-02	Deceleration Time 1	0.0 to 6000.0*2	10.0 s	○
	C1-03	Acceleration Time 2	0.0 to 6000.0*2	10.0 s	○
	C1-04	Deceleration Time 2	0.0 to 6000.0*2	10.0 s	○
	C1-05	Acceleration Time 3 (Motor 2 Accel Time 1)	0.0 to 6000.0*2	10.0 s	○
	C1-06	Deceleration Time 3 (Motor 2 Decel Time 1)	0.0 to 6000.0*2	10.0 s	○
	C1-07	Acceleration Time 4 (Motor 2 Accel Time 2)	0.0 to 6000.0*2	10.0 s	○
	C1-08	Deceleration Time 4 (Motor 2 Decel Time 2)	0.0 to 6000.0*2	10.0 s	○
	C1-09	Fast Stop Time	0.0 to 6000.0*2	10.0 s	×
	C1-10	Accel/Decel Time Setting Units	0, 1	1	×
	C1-11	Accel/Decel Time Switching Frequency	0.0 to 400.0	0.0 Hz	×
S-Curve Characteristics	C2-01	S-Curve Characteristic at Accel Start	0.00 to 10.00	0.20 s*3	×
	C2-02	S-Curve Characteristic at Accel End	0.00 to 10.00	0.20 s	×
	C2-03	S-Curve Characteristic at Decel Start	0.00 to 10.00	0.20 s	×
	C2-04	S-Curve Characteristic at Decel End	0.00 to 10.00	0.00 s	×
Slip Compensation	C3-01	Slip Compensation Gain	0.0 to 2.5	*3	○
	C3-02	Slip Compensation Primary Delay Time	0 to 10000	*3	○
	C3-03	Slip Compensation Limit	0 to 250	200%	×
	C3-04	Slip Compensation Selection during Regeneration	0 to 2	0	×
	C3-05	Output Voltage Limit Operation Selection	0, 1	0	×
	C3-21	Motor 2 Slip Compensation Gain	0.00 to 2.50	dep. on E3-01	○
	C3-22	Motor 2 Slip Compensation Primary Delay Time	0 to 10000	*3	○
	C3-23	Motor 2 Slip Compensation Limit	0 to 250	200%	×
	C3-24	Motor 2 Slip Compensation Selection during Regeneration	0 to 2	0	×
Torque Compensation	C4-01	Torque Compensation Gain	0.00 to 2.50	*3	○ (PM motor ×)
	C4-02	Torque Compensation Primary Delay Time	0 to 60000	*3 *4	○
	C4-03	Torque Compensation at Forward Start	0.0 to 200.0	0.0%	×
	C4-04	Torque Compensation at Reverse Start	−200.0 to 0.0	0.0%	×
	C4-05	Torque Compensation Time Constant	0 to 200	10 ms	×
	C4-06	Torque Compensation Primary Delay Time 2	0 to 10000	150 ms	×
	C4-07	Motor 2 Torque Compensation Gain	0.00 to 2.50	1.00	○

*1: Parameter is not reset to the default value when the drive is initialized (A1-03).
*2: Default value depends on other related parameter settings. Refer to A1000 Technical Manual for details.
*3: Default setting depends on the control mode (A1-02). Refer to A1000 Technical Manual for details.
*4: Default setting depends on drive capacity (o2-04). Refer to A1000 Technical Manual for details.

Function	No.	Name	Range	Default	Changes during Run
Automatic Speed Regulator (ASR)	C5-01	ASR Proportional Gain 1	0.00 to 300.00*1	*1	○
	C5-02	ASR Integral Time 1	0.000 to 10.000	*1	○
	C5-03	ASR Proportional Gain 2	0.00 to 300.00*1	*1	○
	C5-04	ASR Integral Time 2	0.000 to 10.000	*1	○
	C5-05	ASR Limit	0.0 to 20.0	5.0%	×
	C5-06	ASR Primary Delay Time Constant	0.000 to 0.500	*1	×
	C5-07	ASR Gain Switching Frequency	0.0 to 400.0	0.0 Hz	×
	C5-08	ASR Integral Limit	0 to 400	400%	×
	C5-12	Integral Value during Accel/Decel	0, 1	0	×
	C5-17	Motor Inertia	0.0001 to 600.00	*2 *4 dep. on E5-01	×
	C5-18	Load Inertia Ratio	0.0 to 6000.0	1.0	×
	C5-21	Motor 2 ASR Proportional Gain 1	0.00 to 300.00*1	dep. on E3-01	○
	C5-22	Motor 2 ASR Integral Time 1	0.000 to 10.000	dep. on E3-01	○
	C5-23	Motor 2 ASR Proportional Gain 2	0.00 to 300.00*1	dep. on E3-01	○
	C5-24	Motor 2 ASR Integral Time 2	0.000 to 10.000	dep. on E3-01*1	○
	C5-25	Motor 2 ASR Limit	0.0 to 20.0	5.0%	×
	C5-26	Motor 2 ASR Primary Delay Time Constant	0.000 to 0.500	0.004 s	×
	C5-27	Motor 2 ASR Gain Switching Frequency	0.0 to 400.0	0.0 Hz	×
	C5-28	Motor 2 ASR Integral Limit	0 to 400	400%	×
	C5-32	Integral Operation during Accel/Decel for Motor 2	0, 1	0	×
	C5-37	Motor 2 Inertia	0.0001 to 600.00	*2 *4	×
	C5-38	Motor 2 Load Inertia Ratio	0.0 to 6000.0	1.0	×
Carrier Frequency	C6-01	Drive Duty Selection	0, 1	0	×
	C6-02	Carrier Frequency Selection	1 to F	*1 *2 *4	×
	C6-03	Carrier Frequency Upper Limit	1.0 to 15.0	*4	×
	C6-04	Carrier Frequency Lower Limit	1.0 to 15.0	*4	×
	C6-05	Carrier Frequency Proportional Gain	0 to 99	*4	×
	C6-09	Carrier Frequency during Rotational Auto-Tuning	0, 1	0	×
Frequency Reference	d1-01	Frequency Reference 1	0.00 to 400.00*1*4	0.00 Hz	○
	d1-02	Frequency Reference 2			○
	d1-03	Frequency Reference 3			○
	d1-04	Frequency Reference 4			○
	d1-05	Frequency Reference 5			○
	d1-06	Frequency Reference 6			○
	d1-07	Frequency Reference 7			○
	d1-08	Frequency Reference 8			○
	d1-09	Frequency Reference 9			○
	d1-10	Frequency Reference 10			○
	d1-11	Frequency Reference 11			○
	d1-12	Frequency Reference 12			○
	d1-13	Frequency Reference 13			○
	d1-14	Frequency Reference 14			○
	d1-15	Frequency Reference 15			○
	d1-16	Frequency Reference 16			○
	d1-17	Jog Frequency Reference	0.00 to 400.00*1*4	6.00 Hz	○
Frequency Upper/Lower Limits	d2-01	Frequency Reference Upper Limit	0.0 to 110.0	100.0%	×
	d2-02	Frequency Reference Lower Limit	0.0 to 110.0	0.0%	×
	d2-03	Master Speed Reference Lower Limit	0.0 to 110.0	0.0%	×

Function	No.	Name	Range	Default	Changes during Run
Jump Frequency	d3-01	Jump Frequency 1	0.0 to 400.0	0.0 Hz	×
	d3-02	Jump Frequency 2			×
	d3-03	Jump Frequency 3			×
	d3-04	Jump Frequency Width	0.0 to 20.0	1.0 Hz	×
Frequency Reference Hold and Up/Down 2 Function	d4-01	Freq. Ref. Hold Function Selection	0, 1	0	×
	d4-03	Freq. Ref. Bias Step (Up/Down 2)	0.00 to 99.99	0.00 Hz	○
	d4-04	Freq. Ref. Bias Accel/Decel (Up/Down 2)	0, 1	0	○
	d4-05	Freq. Ref. Bias Operation Mode Selection (Up/Down 2)	0, 1	0	○
	d4-06	Freq. Ref. Bias (Up/Down 2)	−99.9 to 100.0	0.0%	×
	d4-07	Analog Freq. Ref. Fluctuation Limit (Up/Down 2)	0.1 to 100.0	1.0%	○
	d4-08	Freq. Ref. Bias Upper Limit (Up/Down 2)	0.0 to 100.0	0.0%	○
	d4-09	Freq. Ref. Bias Lower Limit (Up/Down 2)	−99.9 to 0.0	0.0%	○
	d4-10	Up/Down Freq. Ref. Limit Selection	0, 1	0	×
Torque Control	d5-01	Torque Control Selection	0, 1	0	×
	d5-02	Torque Reference Delay Time	0 to 1000	0 ms	×
	d5-03	Speed Limit Selection	1, 2	1	×
	d5-04	Speed Limit	−120 to 120	0%	×
	d5-05	Speed Limit Bias	0 to 120	10%	×
	d5-06	Speed/Torque Control Switchover Time	0 to 1000	0 ms	×
	d5-08	Unidirectional Speed Limit Bias	0, 1	1	×
Field Weakening and Field Forcing	d6-01	Field Weakening Level	0 to 100	80%	×
	d6-02	Field Weakening Frequency Limit	0.0 to 400.0	0.0 Hz	×
	d6-03	Field Forcing Selection	0, 1	0	×
	d6-06	Field Forcing Limit	100 to 400	400%	×
Offset Frequency	d7-01	Offset Frequency 1	−100.0 to 100.0	0.0%	○
	d7-02	Offset Frequency 2			○
	d7-03	Offset Frequency 3			○
V/f Pattern for motor 1	E1-01	Input Voltage Setting	155 to 255	200 V *5	×
	E1-03	V/f Pattern Selection	0 to F*1	F*3	×
	E1-04	Maximum Output Frequency	40.0 to 400.0*1	*1 dep. on E5-01 for PM motor	×
	E1-05	Maximum Voltage	0.0 to 255.0*5	*1 dep. on E5-01 for PM motor	×
	E1-06	Base Frequency	0.0 to E1-04*1	*1 dep. on E5-01 for PM motor	×
	E1-07	Middle Output Frequency	0.0 to E1-04	*1	×
	E1-08	Middle Output Frequency Voltage	0.0 to 255.0*5	*1 *5	×
	E1-09	Minimum Output Frequency	0.0 to E1-04*1	*1 dep. on E5-01 for PM motor	×
	E1-10	Minimum Output Frequency Voltage	0.0 to 255.0*5	*1 *5	×
	E1-11	Middle Output Frequency 2	0.0 to E1-04*1*4	0.0 Hz	×
	E1-12	Middle Output Frequency Voltage 2	0.0 to 255.0*4*5	0.0 V	×
	E1-13	Base Voltage	0.0 to 255.0*5	0.0 V*4	×

*1: Default setting depends on the control mode (A1-02). Refer to the A1000 Technical Manual for details.
*2: Default setting depends on drive capacity (o2-04). Refer to the A1000 Technical Manual for details.
*3: Parameter is not reset to the default value when the drive is initialized (A1-03).
*4: Default value depends on other related parameter settings. Refer to the A1000 Technical Manual for details.
*5: Values shown here are for 200 V class drives. Double the value when using a 400 V class drive.

Parameter List (continued)

Function	No.	Name	Range	Default	Changes during Run
Motor 1 Parameters	E2-01	Motor Rated Current	10% to 200% of the drive rated current*1	*1	×
	E2-02	Motor Rated Slip	0.00 to 20.00	*1	×
	E2-03	Motor No-Load Current	0 to E2-01*1	*1	×
	E2-04	Number of Motor Poles	2 to 48	4	×
	E2-05	Motor Line-to-Line Resistance	0.000 to 65.000	*1	×
	E2-06	Motor Leakage Inductance	0.0 to 40.0	*1	×
	E2-07	Motor Iron-Core Saturation Coefficient 1	E2-07 to 0.50	0.50	×
	E2-08	Motor Iron-Core Saturation Coefficient 2	E2-07 to 0.75	0.75	×
	E2-09	Motor Mechanical Loss	0.0 to 10.0	0.0%	×
	E2-10	Motor Iron Loss for Torque Compensation	0 to 65535	*1	×
	E2-11	Motor Rated Power	0.00 to 650.00*2	*1	×
V/f Pattern for Motor 2	E3-01	Motor 2 Control Mode Selection	0 to 3	0	×
	E3-04	Motor 2 Max. Output Frequency	40.0 to 400.0	dep. on E3-01	×
	E3-05	Motor 2 Max. Voltage	0.0 to 255.0*3	dep. on E3-01	×
	E3-06	Motor 2 Base Frequency	0.0 to E3-04	dep. on E3-01	×
	E3-07	Motor 2 Mid Output Freq.	0.0 to E3-04	dep. on E3-01	×
	E3-08	Motor 2 Mid Output Freq. Voltage	0.0 to 255.0*3	*3 dep. on E3-01	×
	E3-09	Motor 2 Min. Output Freq.	0.0 to E3-04	dep. on E3-01	×
	E3-10	Motor 2 Min. Output Freq. Voltage	0.0 to 255.0*3	*3 dep. on E3-01	×
	E3-11	Motor 2 Mid Output Frequency 2	0.0 to E3-04*4	0.0*5	×
	E3-12	Motor 2 Mid Output Frequency Voltage 2	0.0 to 255.0*3	0.0*5	×
	E3-13	Motor 2 Base Voltage	0.0 to 255.0*3	0.0*5	×
Motor 2 Parameters	E4-01	Motor 2 Rated Current	10% to 200% of the drive rated current*1	*1	×
	E4-02	Motor 2 Rated Slip	0.00 to 20.00*1	*1	×
	E4-03	Motor 2 Rated No-Load Current	0 to E4-01*1	*1	×
	E4-04	Motor 2 Motor Poles	2 to 48	4	×
	E4-05	Motor 2 Line-to-Line Resistance	0.000 to 65.000	*1	×
	E4-06	Motor 2 Leakage Inductance	0.0 to 40.0	*1	×
	E4-07	Motor 2 Motor Iron-Core Saturation Coefficient 1	0.00 to 0.50	0.50	×
	E4-08	Motor 2 Motor Iron-Core Saturation Coefficient 2	E4-07 to 0.75	0.75	×
	E4-09	Motor 2 Mechanical Loss	0.0 to 10.0	0.0%	×
	E4-10	Motor 2 Iron Loss	0 to 65535	*1	×
	E4-11	Motor 2 Rated Capacity	0.00 to 650.00*2	*1	×
PM Motor Settings	E5-01	Motor Code Selection	0000 to FFFF	*1 *4 *6	×
	E5-02	Motor Rated Capacity	0.10 to 650.00*2	*6 dep. on E5-01	×
	E5-03	Motor Rated Current	10% to 200% of the drive rated current*1	*6 dep. on E5-01	×
	E5-04	Number of Motor Poles	2 to 48	*6 dep. on E5-01	×
PM Motor Settings	E5-05	Motor Stator Resistance	0.000 to 65.000	*6 dep. on E5-01	×
	E5-06	Motor d-Axis Inductance	0.00 to 300.00	*6 dep. on E5-01	×
	E5-07	Motor q-Axis Inductance	0.00 to 600.00	*6 dep. on E5-01	×
	E5-09	Motor Induction Voltage Constant 1	0.0 to 2000.0	*6 dep. on E5-01	×
	E5-11	Encoder Z Pulse Offset	−180.0 to 180.0	0.0 deg	×
	E5-24	Motor Induction Voltage Constant 2	0.0 to 2000.0	*6 dep. on E5-01	×
PG Speed Control Card (PG-B3/PG-X3)	F1-01	PG 1 Pulses Per Revolution	0 to 60000	600 ppr	×
	F1-02	Operation Selection at PG Open Circuit (PGo)	0 to 3	1	×
	F1-03	Operation Selection at Overspeed (oS)	0 to 3	1	×
	F1-04	Operation Selection at Deviation	0 to 3	3	×
	F1-05	PG 1 Rotation Selection	0, 1	0	×
	F1-06	PG 1 Division Rate for PG Pulse Monitor	1 to 132	1	×
	F1-08	Overspeed Detection Level	0 to 120	115%	×
	F1-09	Overspeed Detection Delay Time	0.0 to 2.0	*4	×
	F1-10	Excessive Speed Deviation Detection Level	0 to 50	10%	×
	F1-11	Excessive Speed Deviation Detection Delay Time	0.0 to 10.0	0.5 s	×
	F1-12	PG 1 Gear Teeth 1	0 to 1000	0	×
	F1-13	PG 1 Gear Teeth 2	0 to 1000	0	×
	F1-14	PG Open-Circuit Detection Time	0.0 to 10.0	2.0 s	×
	F1-18	dv3 Detection Selection	0 to 10	10	×
	F1-19	dv4 Detection Selection	0 to 5000	128	×
	F1-20	PG Option Card Disconnect Detection 1	0, 1	1	×
	F1-21	PG 1 Signal Selection	0, 1	0	×
	F1-30	PG Card Option Port for Motor 2 Selection	0, 1	1	×
	F1-31	PG 2 Pulses Per Revolution	0 to 60000	1024 ppr	×
	F1-32	PG 2 Rotation Selection	0, 1	0	×
	F1-33	PG 2 Gear Teeth 1	0 to 1000	0	×
	F1-34	PG 2 Gear Teeth 2	0 to 1000	0	×
	F1-35	PG 2 Division Rate for PG Pulse Monitor	1 to 132	1	×
	F1-36	PG Option Card Disconnect Detection 2	0, 1	1	×
	F1-37	PG 2 Signal Selection	0, 1	0	×
Analog Input Card (AI-A3)	F2-01	Analog Input Option Card Operation Selection	0, 1	0	×
	F2-02	Analog Input Option Card Gain	−999.9 to 999.9	100.0%	○
	F2-03	Analog Input Option Card Bias	−999.9 to 999.9	0.0%	○
Digital Input Card (DI-A3)	F3-01	Digital Input Option Card Input Selection	0 to 7	0	×
	F3-03	Digital Input Option DI-A3 Data Length Selection	0 to 2	2	×
Analog Monitor Card (AO-A3)	F4-01	Terminal V1 Monitor Selection	000 to 999	102	×
	F4-02	Terminal V1 Monitor Gain	−999.9 to 999.9	100.0%	○
	F4-03	Terminal V2 Monitor Selection	000 to 999	103	×
	F4-04	Terminal V2 Monitor Gain	−999.9 to 999.9	50.0%	○
	F4-05	Terminal V1 Monitor Bias	−999.9 to 999.9	0.0%	○
	F4-06	Terminal V2 Monitor Bias	−999.9 to 999.9	0.0%	○
	F4-07	Terminal V1 Signal Level	0, 1	0	×
	F4-08	Terminal V2 Signal Level	0, 1	0	×
Digital Output Card (DO-A3)	F5-01	Terminal M1-M2 Output Selection	0 to 192	0	×
	F5-02	Terminal M3-M4 Output Selection	0 to 192	1	×
	F5-03	Terminal P1-PC Output Selection	0 to 192	2	×
	F5-04	Terminal P2-PC Output Selection	0 to 192	4	×
	F5-05	Terminal P3-PC Output Selection	0 to 192	6	×
	F5-06	Terminal P4-PC Output Selection	0 to 192	37	×
	F5-07	Terminal P5-PC Output Selection	0 to 192	F	×
	F5-08	Terminal P6-PC Output Selection	0 to 192	F	×
	F5-09	DO-A3 Output Mode Selection	0 to 2	0	×

*1: Default setting depends on drive capacity (o2-04). Refer to the A1000 Technical Manual for details.
*2: The setting value has two decimal places for drives up to 300 kW, and one decimal place for larger drives.
*3: Values shown here are for 200 V class drives. Double the value when using a 400 V class drive.
*4: Default setting depends on the control mode (A1-02). Refer to the A1000 Technical Manual for details.
*5: Default value depends on other related parameter settings. Refer to the A1000 Technical Manual for details.
*6: Parameter is not reset to the default value when the drive is initialized (A1-03).

Function	No.	Name	Range	Default	Changes during Run
Communication Option Card	F6-01	Communications Error Operation Selection	0 to 3	1	×
	F6-02	External Fault from Comm. Option Detection Selection	0, 1	0	×
	F6-03	External Fault from Comm. Option Operation Selection	0 to 3	1	×
	F6-04	bUS Error Detection Time	0.0 to 5.0	2.0 s	×
	F6-06	Torque Reference/Torque Limit Selection from Communications Option	0, 1	0	×
	F6-07	NetRef/ComRef Function Selection	0,1	0	×
	F6-08	Reset Communication Parameters	0,1	0*1	×
	F6-10	CC-Link Node Address	0 to 64	0	×
	F6-11	Communication Speed	0 to 4	0	×
	F6-14	CC-Link bUS Error Auto Reset	0, 1	0	×
	F6-30	PROFIBUS-DP Node Address	0 to 125	0	×
	F6-31	PROFIBUS-DP Clear Mode Selection	0, 1	0	×
	F6-32	PROFIBUS-DP Data Format Selection	0, 1	0	×
	F6-35	CANopen Node ID Selection	0 to 127	0	×
	F6-36	CANopen Communication Speed	0 to 8	6	×
	F6-50 to F6-63	DeviceNet Parameters	–	–	×
	F6-64 to F6-71	Reserved	–	–	×
Multi-Function Digital Inputs	H1-01	Multi-Function Digital Input Terminal S1 Function Selection	1 to 9F	40 (F)*2	×
	H1-02	Multi-Function Digital Input Terminal S2 Function Selection	1 to 9F	41 (F)*2	×
	H1-03	Multi-Function Digital Input Terminal S3 Function Selection	1 to 9F	24	×
	H1-04	Multi-Function Digital Input Terminal S4 Function Selection	1 to 9F	14	×
	H1-05	Multi-Function Digital Input Terminal S5 Function Selection	1 to 9F	3 (0)*2	×
	H1-06	Multi-Function Digital Input Terminal S6 Function Selection	1 to 9F	4 (3)*2	×
	H1-07	Multi-Function Digital Input Terminal S7 Function Selection	1 to 9F	6 (4)*2	×
	H1-08	Multi-Function Digital Input Terminal S8 Function Selection	1 to 9F	8	×
Multi-Function Digital Outputs	H2-01	Terminals M1-M2 Function Selection (relays)	0 to 192	0	×
	H2-02	Terminal P1-PC Function Selection (photocoupler)	0 to 192	1	×
	H2-03	Terminal P2-PC Function Selection (photocoupler)	0 to 192	2	×
	H2-06	Watt Hour Output Unit Selection	0 to 4	0	×
Multi-Function Analog Inputs	H3-01	Terminal A1 Signal Level Selection	0, 1	0	×
	H3-02	Terminal A1 Function Selection	0 to 31	0	×
	H3-03	Terminal A1 Gain Setting	−999.9 to 999.9	100.0%	○
	H3-04	Terminal A1 Bias Setting	−999.9 to 999.9	0.0%	○
	H3-05	Terminal A3 Signal Level Selection	0, 1	0	×
	H3-06	Terminal A3 Function Selection	0 to 31	2	×
	H3-07	Terminal A3 Gain Setting	−999.9 to 999.9	100.0%	○
	H3-08	Terminal A3 Bias Setting	−999.9 to 999.9	0.0%	○

Function	No.	Name	Range	Default	Changes during Run
Multi-Function Analog Inputs	H3-09	Terminal A2 Signal Level Selection	0 to 3	2	×
	H3-10	Terminal A2 Function Selection	0 to 31	0	×
	H3-11	Terminal A2 Gain Setting	−999.9 to 999.9	100.0%	○
	H3-12	Terminal A2 Bias Setting	−999.9 to 999.9	0.0%	○
	H3-13	Analog Input Filter Time Constant	0.00 to 2.00	0.03 s	×
	H3-14	Analog Input Terminal Enable Selection	1 to 7	7	×
Multifunction Analog Outputs	H4-01	Multi-Function Analog Output Terminal FM Monitor Selection	000 to 999	102	×
	H4-02	Multi-Function Analog Output Terminal FM Gain	−999.9 to 999.9	100.0%	○
	H4-03	Multi-Function Analog Output Terminal FM Bias	−999.9 to 999.9	0.0%	○
	H4-04	Multi-Function Analog Output Terminal AM Monitor Selection	000 to 999	103	×
	H4-05	Multi-Function Analog Output Terminal AM Gain	−999.9 to 999.9	50.0%	○
	H4-06	Multi-Function Analog Output Terminal AM Bias	−999.9 to 999.9	0.0%	○
	H4-07	Multi-Function Analog Output Terminal FM Signal Level Selection	0, 1	0	×
	H4-08	Multi-Function Analog Output Terminal AM Signal Level Selection	0, 1	0	×
MEMOBUS/Modbus Serial Communication	H5-01	Drive Node Address	0 to FFH	1F	×
	H5-02	Communication Speed Selection	0 to 8	3	×
	H5-03	Communication Parity Selection	0 to 2	0	×
	H5-04	Stopping Method After Communication Error (CE)	0 to 3	0	×
	H5-05	Communication Fault Detection Selection	0, 1	0	×
	H5-06	Drive Transmit Wait Time	5 to 65	5 ms	×
	H5-07	RTS Control Selection	0, 1	1	×
	H5-09	CE Detection Time	0.0 to 10.0	2.0 s	×
	H5-10	Unit Selection for MEMOBUS/Modbus Register 0025H	0, 1	0	×
	H5-11	Communications ENTER Function Selection	0, 1	1	×
	H5-12	Run Command Method Selection	0, 1	0	×
Pulse Train Input/Output	H6-01	Pulse Train Input Terminal RP Function Selection	0 to 3	0	×
	H6-02	Pulse Train Input Scaling	1000 to 32000	1440 Hz	○
	H6-03	Pulse Train Input Gain	0.0 to 1000.0	100.0%	○
	H6-04	Pulse Train Input Bias	−100.0 to 100.0	0.0%	○
	H6-05	Pulse Train Input Filter Time	0.00 to 2.00	0.10 s	○
	H6-06	Pulse Train Monitor Selection	000 to 502	102	○
	H6-07	Pulse Train Monitor Scaling	0 to 32000	1440 Hz	○
	H6-08	Pulse Train Input Minimum Frequency	0.1 to 1000.0	0.5 Hz	×
Motor Protection	L1-01	Motor Overload Protection Selection	0 to 5	*4	×
	L1-02	Motor Overload Protection Time	0.1 to 5.0	1.0 min.	×
	L1-03	Motor Overheat Alarm Operation Selection (PTC input)	0 to 3	3	×
	L1-04	Motor Overheat Fault Operation Selection (PTC input)	0 to 2	1	×
	L1-05	Motor Temperature Input Filter Time (PTC input)	0.00 to 10.00	0.20 s	×
	L1-13	Continuous Electrothermal Operation Selection	0, 1	1	×

*1: Parameter is not reset to the default value when the drive is initialized (A1-03).
*2: Value in parenthesis is the default setting for a 3-wire sequence.
*3: Default value depends on other related parameter settings. Refer to the A1000 Technical Manual for details.
*4: Default setting depends on the control mode (A1-02). Refer to the A1000 Technical Manual for details.

Function	No.	Name	Range	Default	Online Changing
Momentary Power Loss Ride-Thru	L2-01	Momentary Power Loss Operation Selection	0 to 5	0	×
	L2-02	Momentary Power Loss Ride-Thru Time	0.0 to 25.5	∗1	×
	L2-03	Momentary Power Loss Minimum Baseblock Time	0.1 to 5.0	∗1	×
	L2-04	Momentary Power Loss Voltage Recovery Ramp Time	0.0 to 5.0	∗1	×
	L2-05	Undervoltage Detection Level (Uv1)	150 to 210∗2	∗1∗4 dep. on E1-01	×
	L2-06	KEB Deceleration Time	0.00 to 6000.00∗3	0.00 s	×
	L2-07	KEB Acceleration Time	0.00 to 6000.00∗3	0.00 s	×
	L2-08	Frequency Gain at KEB Start	0 to 300	100%	×
	L2-10	KEB Detection Time	0 to 2000	52 ms	×
	L2-11	DC Bus Voltage Setpoint during KEB	150 to 400∗2	∗2 reset by E1-01, E-01 × 1.22	×
	L2-29	KEB Method Selection	0 to 3	0	×
Stall Prevention	L3-01	Stall Prevention Selection during Acceleration	0 to 2	1	×
	L3-02	Stall Prevention Level during Acceleration	0 to 150∗3	∗3	×
	L3-03	Stall Prevention Limit during Acceleration	0 to 100	50%	×
	L3-04	Stall Prevention Selection during Deceleration	0 to 5∗4	1	×
	L3-05	Stall Prevention Selection during Run	0 to 2	1	×
	L3-06	Stall Prevention Level during Run	30 to 150∗3	∗3	×
	L3-11	Overvoltage Suppression Function Selection	0, 1	0	×
	L3-17	Target DC Bus Voltage for Overvoltage Suppression and Stall Prevention	150 to 400∗2 dep. on E1-01, reset by E1-01	370 Vdc dep. on E1-01	×
	L3-20	DC Bus Voltage Adjustment Gain	0.00 to 5.00	∗4	×
	L3-21	Accel/Decel Rate Calculation Gain	0.10 to 200.0	∗4	×
	L3-22	Deceleration Time at Stall Prevention during Acceleration	0.0 to 6000.0	0.0 s	×
	L3-23	Automatic Reduction Selection for Stall Prevention during Run	0, 1	0	×
	L3-24	Motor Acceleration Time for Inertia Calculations	0.001 to 10.000	∗1 dep. on E2-11 dep. on E5-01	×
	L3-25	Load Inertia Ratio	0.0 to 1000.0	1.0	×
	L3-26	Additional DC Bus Capacitors	0 to 65000	0 μF	×
	L3-27	Stall Prevention Detection Time	0 to 5000	50 ms	×
Speed Detection	L4-01	Speed Agreement Detection Level	0.0 to 400.0	0.0 Hz	×
	L4-02	Speed Agreement Detection Width	0.0 to 20.0	2.0 Hz	×
	L4-03	Speed Agreement Detection Level (+/-)	−400.0 to 400.0	0.0 Hz	×
	L4-04	Speed Agreement Detection Width (+/-)	0.0 to 20.0	2.0 Hz	×
	L4-05	Frequency Reference Loss Detection Selection	0, 1	0	×
	L4-06	Frequency Reference at Reference Loss	0.0 to 100.0	80.0%	×
	L4-07	Speed Agreement Detection Selection	0, 1	0	×
Fault Reset	L5-01	Number of Auto Restart Attempts	0 to 10	0	×
	L5-02	Auto Restart Fault Output Operation Selection	0, 1	0	×
	L5-04	Fault Reset Interval Time	0.5 to 600.0	10.0 s	×
	L5-05	Fault Reset Operation Selection	0, 1	0	×

Function	No.	Name	Range	Default	Online Changing
Torque Detection	L6-01	Torque Detection Selection 1	0 to 8	0	×
	L6-02	Torque Detection Level 1	0 to 300	150%	×
	L6-03	Torque Detection Time 1	0.0 to 10.0	0.1 s	×
	L6-04	Torque Detection Selection 2	0 to 8	0	×
	L6-05	Torque Detection Level 2	0 to 300	150%	×
	L6-06	Torque Detection Time 2	0.0 to 10.0	0.1 s	×
	L6-08	Mechanical Weakening Detection Operation	0 to 8	0	×
	L6-09	Mechanical Weakening Detection Speed Level	−110.0 to 110.0	110.0%	×
	L6-10	Mechanical Weakening Detection Time	0.0 to 10.0	0.1 s	×
	L6-11	Mechanical Weakening Detection Start Time	0 to 65535	0	×
Torque Limit	L7-01	Forward Torque Limit	0 to 300	200%	×
	L7-02	Reverse Torque Limit	0 to 300	200%	×
	L7-03	Forward Regenerative Torque Limit	0 to 300	200%	×
	L7-04	Reverse Regenerative Torque Limit	0 to 300	200%	×
	L7-06	Torque Limit Integral Time Constant	5 to 10000	200 ms	×
	L7-07	Torque Limit Control Method Selection during Accel/Decel	0, 1	0	×
Drive Protection	L8-01	Internal Dynamic Braking Resistor Protection Selection (ERF type)	0, 1	∗1	×
	L8-02	Overheat Alarm Level	50 to 130	∗1	×
	L8-03	Overheat Pre-Alarm Operation Selection	0 to 4	3	×
	L8-05	Input Phase Loss Protection Selection	0, 1	0	×
	L8-07	Output Phase Loss Protection	0 to 2	0	×
	L8-09	Output Ground Fault Detection Selection	0, 1	∗1	×
	L8-10	Heatsink Cooling Fan Operation Selection	0, 1	0	×
	L8-11	Heatsink Cooling Fan Off Delay Time	0 to 300	60 s	×
	L8-12	Ambient Temperature Setting	−10 to 50	40˚C	×
	L8-15	oL2 Characteristics Selection at Low Speeds	0, 1	1	×
	L8-18	Software Current Limit Selection	0, 1	0	×
	L8-19	Frequency Reduction Rate during oH Pre-Alarm	0.1 to 0.9	0.8	×
	L8-27	Overcurrent Detection Gain	0.0 to 300.0	300.0%	×
	L8-29	Current Unbalance Detection (LF2)	0, 1	1	×
	L8-35	Installation Method Selection	0 to 3	∗1 ∗5	×
	L8-38	Carrier Frequency Reduction Selection	0 to 2	∗1∗4	×
	L8-40	Carrier Frequency Reduction Off DelayTime	0.00 to 2.00	0.50 s	×
	L8-41	High Current Alarm Selection	0, 1	0	×
	L8-55	Internal Braking Transistor Protection	0,1	1	×
Hunting Prevention	n1-01	Hunting Prevention Selection	0, 1	1	×
	n1-02	Hunting Prevention Gain Setting	0.00 to 2.50	1.00	×
	n1-03	Hunting Prevention Time Constant	0 to 500	∗1	×
	n1-05	Hunting Prevention Gain while in Reverse	0.00 to 2.50	0.00	
Speed Feedback Detection Control (ASR) Tuning	n2-01	Speed Feedback Detection Control (AFR) Gain	0.00 to 10.00	1.00	×
	n2-02	Speed Feedback Detection Control (AFR) Time Constant 1	0 to 2000	50 ms	×
	n2-03	Speed Feedback Detection Control (AFR) Time Constant 2	0 to 2000	750 ms	×
High Slip Braking and Overexcitation Braking	n3-01	High-Slip Braking Deceleration Frequency Width	1 to 20	5%	×
	n3-02	High-Slip Braking Current Limit	100 to 200	∗3	×
	n3-03	High-Slip Braking Dwell Time at Stop	0.0 to 10.0	1.0 s	×
	n3-04	High-Slip Braking Overload Time	30 to 1200	40 s	×
	n3-13	Overexcitation Deceleration Gain	1.00 to 1.40	1.10	×
	n3-14	High Frequency Injection during Overexcitation Deceleration	0, 1	0	×
	n3-21	High-Slip Suppression Current Level	0 to 150	100%	×
	n3-23	Overexcitation Operation Selection	0 to 2	0	×
Feed Forward Control	n5-01	Feed Forward Control Selection	0, 1	0	×
	n5-02	Motor Acceleration Time	0.001 to 10.000	∗1 dep. on E5-01	×
	n5-03	Feed Forward Control Gain	0.00 to 100.00	1.00	×

∗1: Default setting depends on drive capacity (o2-04). Refer to the A1000 Technical Manual for details.
∗2: Values shown here are for 200 V class drives. Double the value when using a 400 V class drive.
∗3: Default value depends on other related parameter settings. Refer to the A1000 Technical Manual for details.
∗4: Default setting depends on the control mode (A1-02). Refer to the A1000 Technical Manual for details.
∗5: Parameter is not reset to the default value when the drive is initialized (A1-03).

Function	No.	Name	Range	Default	Online Changing
Online Tuning	n6-01	Online Tuning Selection	0 to 2	2	×
	n6-05	Online Tuning Gain	0.10 to 5.00	1.00	×
PM Motor Control Tuning	n8-01	Initial Rotor Position Estimation Current	0 to 100	50%	×
	n8-02	Pole Attraction Current	0 to 150	80%	×
	n8-35	Initial Rotor Position Detection Selection	0 to 2	1	×
	n8-45	Speed Feedback Detection Control Gain	0.00 to 10.00	0.80	×
	n8-47	Pull-In Current Compensation Time Constant	0.0 to 100.0	5.0 s	×
	n8-48	Pull-In Current	20 to 200	30%	×
	n8-49	d-Axis Current for High Efficiency Control	−200.0 to 0.0	dep. on E5-01	×
	n8-51	Acceleration/Deceleration Pull-In Current	0 to 200	50%	×
	n8-54	Voltage Error Compensation Time Constant	0.00 to 10.00	1.00 s	×
	n8-55	Load Inertia	0 to 3	0	×
	n8-57	High Frequency Injection	0, 1	0	×
	n8-62	Output Voltage Limit	0.0 to 230.0*1	200.0 Vac	×
	n8-65	Speed Feedback Detection Control Gain during ov Suppression	0.00 to 10.00	1.50	×
Digital Operator Display Selection	o1-01	Drive Mode Unit Monitor Selection	104 to 809	106	○
	o1-02	User Monitor Selection After Power Up	1 to 5	1	○
	o1-03	Digital Operator Display Selection	0 to 3	0	×
	o1-04	V/f Pattern Display Unit	0, 1	0	×
	o1-10	User-Set Display Units Maximum Value	1 to 60000	*2	×
	o1-11	User-Set Display Units Decimal Display	0 to 3	*2	×
Digital Operator Keypad Functions	o2-01	LO/RE Key Function Selection	0, 1	1	×
	o2-02	STOP Key Function Selection	0, 1	1	×
	o2-03	User Parameter Default Value	0 to 2	0	×
	o2-04	Drive Model Selection	–	dep. on drive capacity	×
	o2-05	Frequency Reference Setting Method Selection	0, 1	0	×
	o2-06	Operation Selection when Digital Operator is Disconnected	0, 1	0	×
	o2-07	Motor Direction at Power Up when Using Operator	0, 1	0	×
	o2-09	Reserved	–	–	×
Copy Function	o3-01	Copy Function Selection	0 to 3	0	×
	o3-02	Copy Allowed Selection	0, 1	0	×
Maintenance Monitor Settings	o4-01	Cumulative Operation Time Setting	0 to 9999	0 H	×
	o4-02	Cumulative Operation Time Selection	0, 1	0	×
	o4-03	Cooling Fan Operation Time Setting	0 to 9999	0 H	×
	o4-05	Capacitor Maintenance Setting	0 to 150	0%	×
	o4-07	DC Bus Pre-charge Relay Maintenance Setting	0 to 150	0%	×
	o4-09	IGBT Maintenance Setting	0 to 150	0%	×
	o4-11	U2, U3 Initialize Selection	0, 1	0	×
	o4-12	kWh Monitor Initialization	0, 1	0	×
	o4-13	Number of Run Commands Counter Initialization	0, 1	0	×
DWEZ Parameters	q1-01 to q6-07	DWEZ Parameters	–	–	○

Function	No.	Name	Range	Default	Online Changing
DWEZ Connection Parameters	r1-01 to r1-40	DWEZ Connection Parameter 1 to 20 (upper/lower)	0 to FFFFH	0	×
Induction Motor Auto-Tuning	T1-00	Motor 1 / Motor 2 Selection	1, 2	1	×
	T1-01	Auto-Tuning Mode Selection	0 to 4,8,9*5	0	×
	T1-02	Motor Rated Power	0.00 to 650.00	*3	×
	T1-03	Motor Rated Voltage	0.0 to 255.0*1	200.0 Vac	×
	T1-04	Motor Rated Current	10% to 200% of the drive rated current	*3	×
	T1-05	Motor Base Frequency	0.0 to 400.0	60.0 Hz	×
	T1-06	Number of Motor Poles	2 to 48	4	×
	T1-07	Motor Base Speed	0 to 24000	1750 r/min	×
	T1-08	PG Number of Pulses Per Revolution	0 to 60000	600 ppr	×
	T1-09	Motor No-Load Current (Stationary Auto-Tuning)	0 to T1-04	–	–
	T1-10	Motor Rated Slip (Stationary Auto-Tuning)	0.00 to 20.00	–	–
	T1-11	Motor Iron Loss	0 to 65535	14 W*2	×
PM Motor Auto-Tuning	T2-01	PM Motor Auto-Tuning Mode Selection	0 to 3,8,9*5	0	×
	T2-02	PM Motor Code Selection	0000 to FFFF	*3 *5	×
	T2-03	PM Motor Type	0,1	1	×
	T2-04	PM Motor Rated Power	0.00 to 650.00	*3	×
	T2-05	PM Motor Rated Voltage	0.0 to 255.0	200.0 Vac	×
	T2-06	PM Motor Rated Current	10% to 200% of the drive rated current	*3	×
	T2-07	PM Motor Base Frequency	0.0 to 400.0	87.5 Hz	×
	T2-08	Number of PM Motor Poles	2 to 48	6	×
	T2-09	PM Motor Base Speed	0 to 24000	1750 r/min	×
	T2-10	PM Motor Stator Resistance	0.000 to 65.000	*6	×
	T2-11	PM Motor d-Axis Inductance	0.00 to 600.00	*6	×
	T2-12	PM Motor q-Axis Inductance	0.00 to 600.00	*6	×
	T2-13	Induced Voltage Constant Unit Selection	0,1	1	×
	T2-14	PM Motor Induced Voltage Constant	0.1 to 2000.0	*6	×
	T2-15	Pull-In Current Level for PM Motor Tuning	0 to 120	30%	–
	T2-16	PG Number of Pulses Per Revolution for PM Motor Tuning	0 to 60000	1024 ppr	–
	T2-17	Encoder Z Pulse Offset	−180.0 to 180.0	0.0°	×
ASR and Inertia Tuning	T3-01	Test Signal Frequency	0.1 to 20.0*2	3.0 Hz	×
	T3-02	Test Signal Amplitude	0.1 to 10.0*2	0.5 rad	×
	T3-03	Motor Inertia	0.0001 to 600.00*6	*3 dep. on E5-01	×
	T3-04	System Response Frequency	0.1 to 50.0*6	10.0 Hz	×

*1: Values shown here are for 200 V class drives. Double the value when using a 400 V class drive.
*2: Default value depends on other related parameter settings. Refer to the A1000 Technical Manual for details.
*3: Default setting depends on drive capacity (o2-04). Refer to the A1000 Technical Manual for details.
*4: Parameter is not reset to the default value when the drive is initialized (A1-03).
*5: Default setting depends on the control mode (A1-02). Refer to the A1000 Technical Manual for details.
*6: Default setting is determined by the drive capacity and the motor code selected in T2-02.

Outstanding operability and quick setup

Operator Names and Functions

Up arrow key
Scrolls up through the display screen, and increases a selected value.

ESC key
Lets the user back up to the previous display screen.

Right arrow key
Scrolls the cursor to the right.

RESET key
Resets a fault.

Glossary
Used as a quick guide for the abbreviations used on the display screen. Details listed on the next page.

Down arrow key
Scrolls down through the display screen, and decreases a selected value.

RUN key
Issues a Run command.

LED panel
More information listed below.

Data display (5-digit)
Displays frequency, parameter number, and other data.

LO/RE light
Lights to indicate that the operator is set for LOCAL.

LO/RE key
Determines where the Run command and frequency reference come from: the keypad (LOCAL) or the control terminals (REMOTE).

ENTER key
Press to enter values, edit parameters, and set the control mode. Press this key to proceed to the next screen when scrolling through various menu displays.

STOP key
Issues a Stop command.

Com port
For connecting to a PC (DriveWizard or DriveWorksEZ), a USB copy unit or a LCD operator.

Lights during communications

LED Display Guide

LED	ON	Flashing	OFF
ALM	A fault has occurred.	• Alarm situation detected. • Operator error (OPE)	Normal operation
REV	Motor is rotating in reverse.	—	Motor is rotating forward.
DRV	In the "Drive Mode"	—	Programming Mode
FOUT	Output frequency	—	—
LO RE	Run command assigned to the operator (LOCAL)	—	Control assigned to remote location
RUN	During run	• During deceleration • Run command is present but the frequency reference is zero.	Drive is stopped.

How the RUN light works:

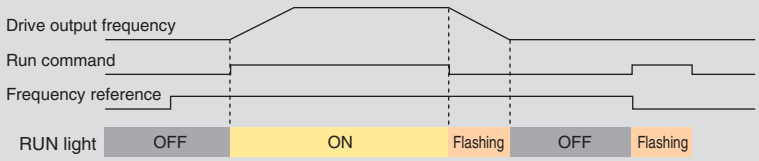

Operation Example

Using the LED Operator to Run the Drive

Steps	Key	Result/Display
1 Turn the power on.		F 0.00
2 Set the drive for LOCAL. The frequency reference is displayed.	LO/RE	LO/RE LO Should light; F 0.00
3 Displays the direction (forward/reverse).	∧	For
4 Displays the output frequency.	∧	0.00
5 Displays the output current.	∧	0.00A
6 Displays the output voltage.	∧	0.0u
7 Displays the beginning of the Monitor Menu.	∧	flashing rMon
8 Displays the top of the Verify Menu.	∧	flashing urFy
9 Displays the top of the Setup Mode.	∧	flashing SrUP
10 Displays the top of the parameter settings menu.	∧	PAr
11 Displays the top of the Auto-Tuning Mode.	∧	ArUn
Returns back to the frequency reference display.	∧	

Value will flash when it is possible to change the setting.

Drive Mode: Run and Stop commands, displays operation status such as the frequency reference, output frequency, output current, output voltage, etc.

How to Monitor the Frequency Reference

Steps	Key	Result/Display
Use the arrow keys to select the digits to set.	ENTER, RESET, ∧ ∨	F00.00; F00.00; F06.00
Press enter to save the new value.	Increase or decrease the value displayed. ENTER	"End" appears while the drive saves the new data. F06.00; DRV DRV lights up.

Monitor Mode: Displays operation status and information on faults.

Steps	Key	Result/Display
Selecting a Monitor for Display. Displays U1-01, the frequency reference monitor.	ENTER, ENTER	U1-01; 6.00
Re-select the monitor display menu.	ESC, ∧ ⋮ ∧	U1-01; U1-02 ⋮ U1-26
Back up to the top of the Monitor Menu.	ESC Press once.	rMon

Verify Menu: Lists all parameters that have been changed from their original default settings, either by the user or from Auto-Tuning.

Steps	Key	Result/Display
Lists parameters that have been changed in order.	ENTER, ENTER	C1-01; 0003.0
Pressing Enter displays the parameter value. Parameters that have been changed from their default values are listed in order.	ESC, ∧ ENTER ⋮ ∧	C1-01; C1-02 ⋮ C6-02
Returns to the top of the Verify Menu	ESC Press once.	urF4

Press ESC to go back to the previous display screen

Setup Mode

The list of Applications Presets can be accessed in the Setup Mode. Each Application Preset automatically programs drive parameters to their optimal settings specific to the application selected. All parameters affected by the Application Preset are then listed as Preferred Parameters for quick access.

Selecting a Conveyor (A1-06=1)

Steps	Key	Result/Display
Application Selection	ENTER, ENTER, RESET	APPL; 00; 00
Select, "Conveyor".	∧	02
All parameters relating to the preset values for a Conveyor application are then listed as Preferred Parameters.	ENTER; ∧ Scroll to the Preferred Parameter using the up arrow key and see which parameters have been selected.	"End" appears while the drive saves the new data. APPL

Conveyor Application Presets

No.	Parameter Name	Optimum Setting
A1-02	Control Method Selection	0: V/f Control
C1-01	Acceleration Time 1	3.0 (s)
C1-02	Deceleration Time 1	3.0 (s)
C6-01	Duty Mode Selection	0: Heavy Duty (HD)
L3-04	Stall Prevention Selection during Deceleration	1: Enabled

Preferred Parameters

No.	Parameter Name	No.	Parameter Name
A1-02	Control Method Selection	C1-02	Deceleration Time 1
b1-01	Frequency Reference Selection 1	E2-01	Motor Rated Current
b1-02	Run Command Selection 1	L3-04	Stall Prevention Selection during Deceleration
C1-01	Acceleration Time 1	–	–

A Standard Specifications

Parameter C6-01 sets the drive for Normal Duty or Heavy Duty performance (default).

200 V Class

Model CIMR-AA2A□□□□			0004	0006	0008	0010	0012	0018	0021	0030	0040	0056	0069	0081	0110	0138	0169	0211
Max. Applicable Motor Capacity*1 kW		Normal Duty	0.75	1.1	1.5	2.2	3	3.7	5.5	7.5	11	15	18.5	22	30	37	45	55
		Heavy Duty	0.4	0.75	1.1	1.5	2.2	3	3.7	5.5	7.5	11	15	18.5	22	30	37	45
Input	Rated Input Current*2 A	Normal Duty	3.9	7.3	8.8	10.8	13.9	18.5	24	37	52	68	80	92	111	136	164	200
		Heavy Duty	2.9	5.8	7	7.5	11	15.6	18.9	28	37	52	68	80	82	111	136	164
Output	Rated Output Capacity*3 kVA	Normal Duty*4	1.3	2.3	3	3.7	4.6	6.7	8	11.4	15.2	21	26	31	42	53	64	80
		Heavy Duty	1.2*5	1.9*5	2.6*5	3*5	4.2*5	5.3*5	6.7*5	9.5*5	12.6*5	17.9*5	23*5	29*5	32*5	44*5	55*5	69*6
	Rated Output Current A	Normal Duty*4	3.5	6	8	9.6	12	17.5	21	30	40	56	69	81	110	138	169	211
		Heavy Duty	3.2*5	5*5	6.9*5	8*5	11*5	14*5	17.5*5	25*5	33*5	47*5	60*5	75*5	85*5	115*5	145*5	180*6
	Overload Tolerance		Normal Duty Rating: 120% of rated output current for 60 s Heavy Duty Rating: 150% of rated output current for 60 s. (Derating may be required for repetitive loads)															
	Carrier Frequency		2 to 15 kHz (user-set)															
	Max. Output Voltage		Three-phase 200 to 240 V (relative to input voltage)															
	Max. Output Frequency		400 Hz (user-set)															
Power	Rated Voltage/Rated Frequency		Three-phase 200 to 240 Vac 50/60 Hz 280 to 330 Vdc															
	Allowable Voltage Fluctuation		−15% to +10%															
	Allowable Frequency Fluctuation		±5%															
	Power Supply kVA	Normal Duty	2.2	3.1	4.1	5.8	7.8	9.5	14	18	27	36	44	52	51	62	75	91
		Heavy Duty	1.3	2.2	3.1	4.1	5.8	7.8	9.5	14	18	27	36	44	37	51	62	75
Harmonic Suppression	DC Reactor		Option												Built-in			
Braking Function	Braking Resistor		Built-in														Option	

*1: The motor capacity (kW) refers to a Yaskawa 4-pole, 60 Hz, 200 V motor. The rated output current of the drive output amps should be equal to or greater than the motor rated current.
*2: Value displayed is for when operating at the rated output current. This value may fluctuate based on the power supply side impedance, as well as the input current, power supply transformer, input side reactor, and wiring conditions.
*3: Rated output capacity is calculated with a rated output voltage of 220 V.
*4: This value assumes a carrier frequency of 2 kHz. Increasing the carrier frequency requires a reduction in current.
*5: This value assumes a carrier frequency of 8 kHz. Increasing the carrier frequency requires a reduction in current.
*6: This value assumes a carrier frequency of 5 kHz. Increasing the carrier frequency requires a reduction in current.

400 V Class

Model CIMR-AA4A□□□□			0002	0004	0005	0007	0009	0011	0018	0023	0031	0038	0044	0058	0072	0088	0103	0139	0165
Max. Applicable Motor Capacity*1 kW		Normal Duty	0.75	1.5	2.2	3	3.7	5.5	7.5	11	15	18.5	22	30	37	45	55	75	90
		Heavy Duty	0.4	0.75	1.5	2.2	3	3.7	5.5	7.5	11	15	18.5	22	30	37	45	55	75
Input	Rated Input Current*2 A	Normal Duty	2.1	4.3	5.9	8.1	9.4	14	20	24	38	44	52	58	71	86	105	142	170
		Heavy Duty	1.8	3.2	4.4	6	8.2	10.4	15	20	29	39	44	43	58	71	86	105	142
Output	Rated Output Capacity*3 kVA	Normal Duty*4	1.6	3.1	4.1	5.3	6.7	8.5	13.3	17.5	24	29	34	44	55	67	78	106	126
		Heavy Duty	1.4*5	2.6*5	3.7*5	4.2*5	5.5*5	7*5	11.3*5	13.7*5	18.3*5	24*5	30*5	34*5	46*5	57*5	69*5	85*5	114*6
	Rated Output Current A	Normal Duty*4	2.1	4.1	5.4	6.9	8.8	11.1	17.5	23	31	38	44	58	72	88	103	139	165
		Heavy Duty	1.8*5	3.4*5	4.8*5	5.5*5	7.2*5	9.2*5	14.8*5	18*5	24*5	31*5	39*5	45*5	60*5	75*5	91*5	112*5	150*6
	Overload Tolerance		Normal Duty Rating: 120% of rated output current for 60 s Heavy Duty Rating: 150% of rated output current for 60 s. (Derating may be required for repetitive loads)															
	Carrier Frequency		2 to 15 kHz (user-set)															
	Max. Output Voltage		Three-phase 380 to 480 V (relative to input voltage)															
	Max. Output Frequency		400 Hz (user-set)															
Power	Rated Voltage/Rated Frequency		Three-phase 380 to 480 Vac 50/60 Hz 560 to 660 Vdc															
	Allowable Voltage Fluctuation		−15% to +10%															
	Allowable Frequency Fluctuation		±5%															
	Power Supply kVA	Normal Duty	2.3	4.3	6.1	8.1	10	14.4	19.4	28.4	37.5	46.6	54.9	53	64.9	78.6	96	129.9	155.5
		Heavy Duty	1.4	2.3	4.3	6.1	8.1	10	14.6	19.2	28.4	37.5	46.6	39.3	53	64.9	78.6	96	129.9
Harmonic Suppression	DC Reactor		Option											Built-in					
Braking Function	Braking Resistor		Built-in													Option			

*1: The motor capacity (kW) refers to a Yaskawa 4-pole, 60 Hz, 400 V motor. The rated output current of the drive output amps should be equal to or greater than the motor rated current.
*2: Value displayed is for when operating at the rated output current. This value may fluctuate based on the power supply side impedance, as well as the input current, power supply transformer, input side reactor, and wiring conditions.
*3: Rated output capacity is calculated with a rated output voltage of 440 V.
*4: This value assumes a carrier frequency of 2 kHz. Increasing the carrier frequency requires a reduction in current.
*5: This value assumes a carrier frequency of 8 kHz. Increasing the carrier frequency requires a reduction in current.
*6: This value assumes a carrier frequency of 5 kHz. Increasing the carrier frequency requires a reduction in current.

Common Specifications

Item		Specifications
Control Characteristics	Control Method	V/f Control, V/f Control with PG, Open Loop Vector Control, Closed Loop Vector Control with PG, Open Loop Vector for PM, Advanced Open Loop Vector for PM, Closed Loop Vector for PM
	Frequency Control Range	0.01 to 400 Hz
	Frequency Accuracy (Temperature Fluctuation)	Digital reference: within ±0.01% of the max. output frequency (–10 to +40˚C) Analog reference: within ±0.1% of the max. output frequency (25˚C ±10˚C)
	Frequency Setting Resolution	Digital reference: 0.01 Hz Analog reference: 0.03 Hz / 60 Hz (11 bit)
	Output Frequency Resolution	0.001 Hz
	Frequency Setting Resolution	−10 to +10 V, 0 to +10 V, 4 to 20 mA, pulse train
	Starting Torque	150%/3 Hz (V/f Control and V/f Control with PG), 200%/0.3 Hz*1 (Open Loop Vector Control), 200%/0 r/min*1 (Closed Loop Vector Control, Closed Loop Vector Control for PM, and Advanced Open Loop Vector Control for PM), 100%/5% speed (Open Loop Vector Control for PM)
	Speed Control Range	1:1500 (Closed Loop Vector Control and Closed Loop Vector for PM) 1:200 (Open Loop Vector Control) 1:40 (V/f Control and V/f Control with PG) 1:20 (Open Loop Vector for PM) 1:100 (Advanced Open Loop Vector for PM)
	Speed Control Accuracy	±0.2% in Open Loop Vector Control (25˚C ±10˚C) *2, ±0.02% in Closed Loop Vector Control (25˚C±10˚C)
	Speed Response	10 Hz in Open Loop Vector (25˚C ±10˚C), 50 Hz in Closed Loop Vector Control (25˚C±10˚C) (excludes temperature fluctuation when performing Rotational Auto-Tuning)
	Torque Limit	All Vector Control allows separate settings in four quadrants
	Accel/Decel Time	0.00 to 6000.0 s (4 selectable combinations of independent acceleration and deceleration settings)
	Braking Torque	Drives of 200/400 V 30 kW or less have a built-in braking transistor. ①Short-time decel torque*3: over 100% for 0.4/ 0.75 kW motors, over 50% for 1.5 kW motors, and over 20% for 2.2 kW and above motors (Overexcitation Deceleration, High Slip Braking: approx. 40%) ②Continuous regen. torque: approx. 20% (approx. 125% with dynamic braking resistor option*4: 10% ED,10 s, internal braking transistor)
	V/f Characteristics	User-selected programs and V/f preset patterns possible
	Main Control Functions	Torque Control, Droop Control, Speed/Torque Control switch, Feed Forward Control, Zero Servo Control, Momentary Power Loss Ride-Thru, Speed Search, Overtorque detection, torque limit, 17 Step Speed (max.), accel/decel time switch, S-curve accel/decel, 3-wire sequence, Auto-Tuning (rotational, stationary), Online Tuning, Dwell, cooling fan on/off switch, slip compensation, torque compensation, Frequency Jump, Upper/lower limits for frequency reference, DC Injection Braking at start and stop, Overexcitation Deceleration, High Slip Braking, PID control (with Sleep function), Energy Saving Control, MEMOBUS comm. (RS-485/422, max. 115.2 kbps), Fault Restart, Application Presets, DriveWorksEZ (customized functions), Removable Terminal Block with Parameter Backup...
Protection Function	Motor Protection	Motor overheat protection based on output current
	Momentary Overcurrent Protection	Drive stops when output current exceeds 200% of Heavy Duty rating
	Overload Protection	Drive stops after 60 s at 150% of rated output current (Heavy Duty rating)*5
	Overvoltage Protection	200 V class: Stops when DC bus exceeds approx. 410 V, 400 V class: Stops when DC bus exceeds approx. 820 V
	Undervoltage Protection	200 V class: Stops when DC bus exceeds approx. 190 V, 400 V class: Stops when DC bus exceeds approx. 380 V
	Momentary Power Loss Ride-Thru	Stops immediately after 15 ms or longer power loss (default). Continuous operation during power up to 2 s (standard).*6
	Heatsink Overheat Protection	Thermistor
	Braking Resistance Overheat Protection	Overheat sensor for braking resistor (optional ERF-type, 3% ED)
	Stall Prevention	Stall prevention during acceleration/deceleration and constant speed operation
	Ground Fault Protection	Protection by electronic circuit *7
	Charge LED	Charge LED remains lit until DC bus has fallen below approx. 50 V
Environment	Area of Use	Indoors
	Ambient Temperature	–10 to +50˚C (open-chassis), –10 to +40˚C (NEMA Type 1)
	Humidity	95% RH or less (no condensation)
	Storage Temperature	–20 to +60˚C (short-term temperature during transportation)
	Altitude	Up to 1000 meters
	Shock	10 Hz to 20 Hz, 9.8 m/s 2 max. 20 Hz to 55 Hz, 5.9 m/s^2 (200 V: 45 kW or more, 400 V: 55 kW or more) or 2.0 m/s^2 max. (200 V: 55 kW or less, 400 V: 75 kW or less)
Safety Standards		UL508C, EN954-1 Cat. 3, IEC/EN61508 SIL2
Protection Design		IP00 open-chassis, NEMA Type 1 enclosure

*1: Requires a drive with recommended capacity.
*2: Speed control accuracy may vary slightly depending on installation conditions or motor used. Contact Yaskawa for details.
*3: Momentary average deceleration torque refers to the deceleration torque from 60 Hz down to 0 Hz. This may vary depending on the motor.
*4: If L3-04 is enabled when using a braking resistor or braking resistor unit, the motor may not stop within the specified deceleration time.
*5: Overload protection may be triggered when operating with 150% of the rated output current if the output frequency is less than 6 Hz.
*6: Varies in accordance with drive capacity and load. Drives with a capacity of smaller than 11 kW in the 200 V (model: CIMR- AA2A0056) or 400 V (model: CIMR-AA4A0031) require a separate Momentary Power Loss Recovery Unit to continue operating during a momentary power loss of 2 s or longer.
*7: Protection may not be provided under the following conditions as the motor windings are grounded internally during run:
・Low resistance to ground from the motor cable or terminal block. ・Drive already has a short-circuit when the power is turned on.

Standard Connection Diagram

Example: 200 V Class 3.7 kW

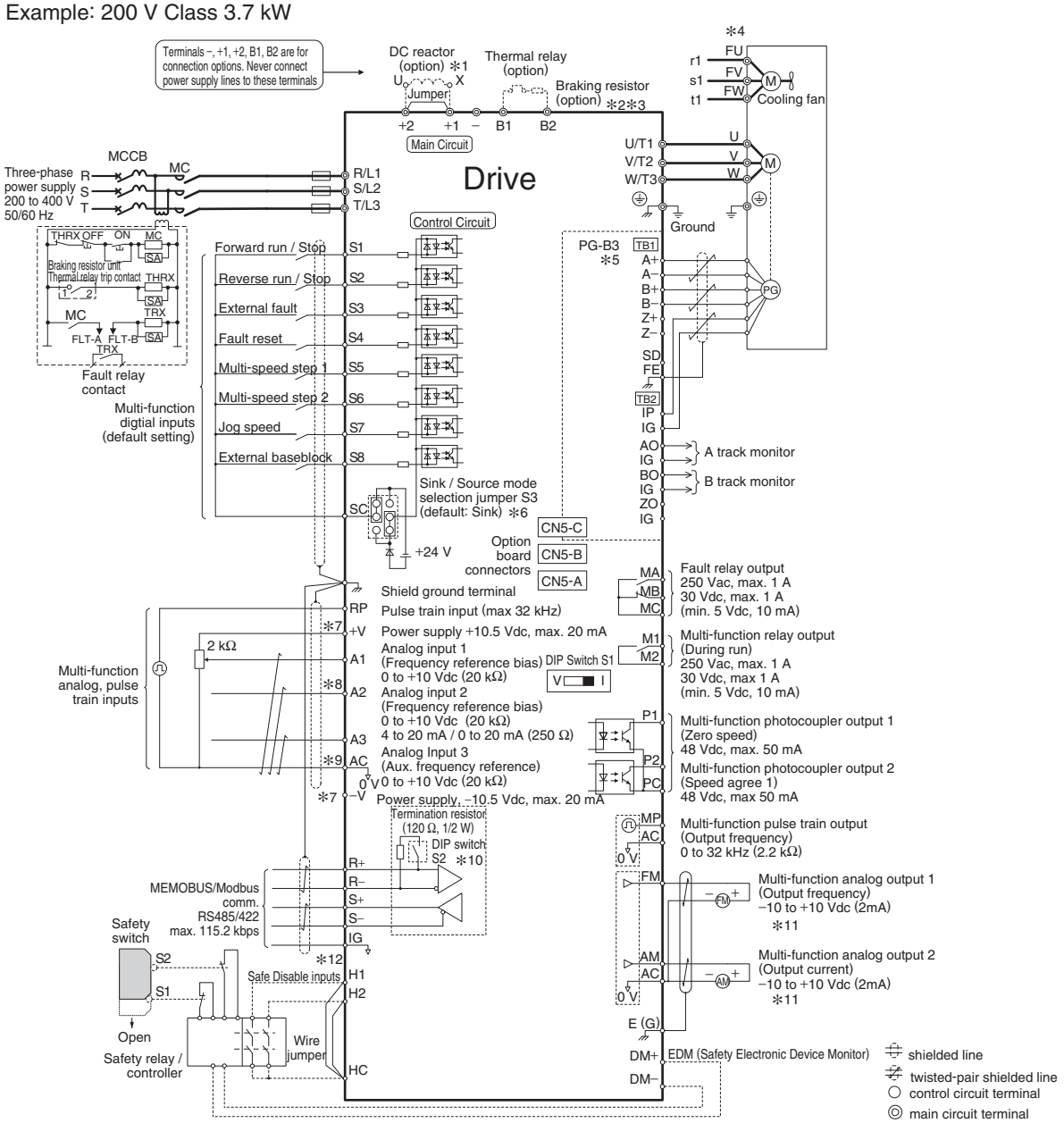

∗1: Remove the jumper when installing a DC reactor. Models 2A0110 through 0211 and 4A0058 through 0165 come with a built-in DC reactor.
∗2: Make sure Stall Prevention is disabled (L3-04 = 0) whenever using a braking resistor. If left enabled, the drive may not stop within the specified deceleration time.
∗3: Enable the drive's braking resistor overload protection by setting L8-01 = 1 when using ERF type braking resistors. Wire the thermal overload relay between the drive and the braking resistor and connect this signal to a drive digital input. Use this input to trigger a fault in the drive in case of a braking resistor overload.
∗4: Self-cooling motors do not require wiring that would be necessary with motors using a cooling fan.
∗5: For control modes that do not use a motor speed feedback signal, PG option card wiring is not necessary.
∗6: This figure shows an example of a sequence input to S1 through S8 using a non-powered relay or an NPN transistor (0 V common/sink mode: default). When sequence connections by PNP transistor (+24 V common/source mode) or preparing a external +24 V power supply, refer to A1000 Technical Manual for details.
∗7: The maximum output current capacity for the +V and –V terminals on the control circuit is 20 mA. Never short terminals +V, –V, and AC, as this can cause erroneous operation or damage the drive.
∗8: Set DIP switch S1 to select between a voltage or current input signal to terminal A2. The default setting is for voltage input.
∗9: Never connect to the AC terminal ground or chassis. This can result in erroneous operation or cause a fault.
∗10: Enable the termination resistor in the last drive in a MEMOBUS/Modbus network by setting DIP switch S2 to the ON position.
∗11: Monitor outputs work with devices such as analog frequency meters, ammeters, voltmeters, and wattmeters. Do not use these outputs in a feedback loop.
∗12: · Disconnect the wire jumper between HC - H1 and HC - H2 when utilizing the Safe Disable input.
· The sink/source setting for the Safe Disable input is the same as with the sequence input. Jumper S3 has the drive set for an external power supply. When not using the Safe Disable input feature, remove the jumper shorting the input and connect an external power supply.
· Time from input open to drive output stop is less than 1 ms. The wiring distance for the Safe Disable inputs should not exceed 30 m.
Note: When an Application Preset is selected, the drive I/O terminal functions change.

Control Circuit and Serial Communication Circuit Terminal Layout

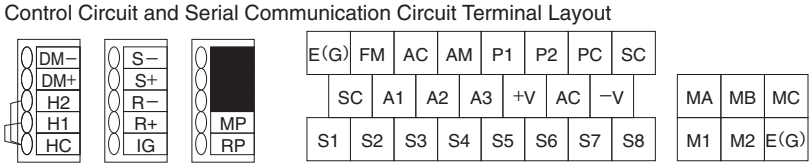

Terminal Functions

Main Circuit Terminals

Max. Applicable Motor Capacity indicates Heavy Duty

Voltage	200 V			400 V		
Model CIMR-AA□□□□	2A0004 to 2A0081	2A0110, 2A0138	2A0169, 2A0211	4A0002 to 4A0044	4A0058, 4A0072	4A0088 to 4A0165
Max. Applicable Motor Capacity kW	0.4 to 18.5	22, 30	37, 45	0.4, 18.5	22, 30	37 to 75
R/L1, S/L2, T/L3	Main circuit input power supply			Main circuit input power supply		
U/T1, V/T2, W/T3	Drive output			Drive output		
B1, B2	Braking resistor unit		–	Braking resistor unit		–
–	· DC reactor (+1, +2) · DC power supply (+1, –)*	DC power supply (+1, –)*	DC power supply (+1, –)* Braking unit (+3, –)	· DC reactor (+1, +2) · DC power supply (+1, –)*	DC power supply (+1, –)*	DC power supply (+1, –)* Braking unit (+3, –)
+1						
+2						
+3	–			–		
⏚	Ground terminal (100 Ω or less)			Ground terminal (10 Ω or less)		

* DC power supply input terminals (+1, –) are not UL/cUL and CE certified.

Control Circuit Input Terminals (200 V/400 V Class)

Terminal Type	Terminal	Signal Function	Description	Signal Level
Multi-Function Digital Input	S1	Multi-function input selection 1	Closed: Forward run (default) Open: Stop (default)	Photocoupler 24 Vdc, 8 mA
	S2	Multi-function input selection 2	Closed: Reverse run (default) Open: Stop (default)	
	S3	Multi-function input selection 3	External fault, N.O. (default)	
	S4	Multi-function input selection 4	Fault reset (default)	
	S5	Multi-function input selection 5	Multi-step speed reference 1 (default)	
	S6	Multi-function input selection 6	Multi-step speed reference 2 (default)	
	S7	Multi-function input selection 7	Jog frequency (default)	
	S8	Multi-function input selection 8	Closed: External baseblock	
	SC	Multi-function input selection common	Multi-function input selection common	
Main Frequency Reference Input	RP	Multi-function pulse train input	Frequency reference (default) (H6-01 = 0)	0 to 32 kHz (3 kΩ)
	+V	Setting power supply	+10.5 V power supply for analog reference (20 mA max.)	
	–V	Setting power supply	–10.5 V power supply for analog reference (20 mA max.)	
	A1	Multi-function analog input 1	–10 to +10 Vdc for –100 to 100%, 0 to +10 Vdc for 0 to 100% (impedance 20 kΩ), Frequency reference bias (default)	
	A2	Multi-function analog input 2	DIP switch S1 sets the terminal for a voltage or current input signal –10 to +10 Vdc for –100 to 100%, 0 to +10 Vdc for 0 to 100% (impedance 20 kΩ) 4 to 20 mA for 0 to 100%, 0 to 20 mA for 0 to 100% (impedance 250 Ω) Added to the reference value of the analog frequency for the main frequency reference (default)	
	A3	Multi-function analog input 3	–10 to +10 Vdc for –100 to 100%, 0 to +10 Vdc for 0 to 100% (impedance 20 kΩ) Auxiliary frequency reference (default)	
	AC	Frequency reference common	0 V	
	E(G)	Connection to wire shielding and option card ground wire	–	
Multi-Function Photocoupler Output	P1	Multi-function photocoupler output (1)	Zero speed (default)	48 Vdc, 2 to 50 mA Photocoupler output*1
	P2	Multi-function photocoupler output (2)	Speed agree (default)	
	PC	Photocoupler output common	–	
Fault Relay Output	MA	N.O. output	Closed: Fault	Relay output 250 Vac, 10 mA to 1 A, 30 V, 10 mA to 1 A Minimum load: 5 Vdc, 10 mA
	MB	N.O. output	Open: Fault	
	MC	Digital output common	–	
Multi-Function Digital Output*2	M1	Multi-function digital output	During run (default)	
	M2		Closed: During run	
Monitor Output	MP	Pulse train input	Output frequency (default) (H6-06 = 102)	0 to 32 kHz (2.2 kΩ)
	FM	Multi-function analog monitor (1)	Output frequency (default)	0 to +10 Vdc for 0 to 100% –10 to 10 Vdc for –100 to 100%
	AM	Multi-function analog monitor (2)	Output current (default)	
	AC	Analog common	0 V	
Safety Input	H1	Safety input 1	24 Vdc 8 mA. One or both open: Output disabled. Both closed: Normal operation. Internal impedance 3.3 kΩ, switching time at least 1 ms.	
	H2	Safety input 2		
	HC	Safety input common	Safety input common	
Safety Monitor Output	DM+	Safety monitor output	Outputs status of Safe Disable function. Closed when both Safe Disable channels are closed.	48 Vdc, 50 mA or less
	DM–	Safety monitor output common		

*1: Connect a flywheel diode as shown below when driving a reactive load such as a relay coil. Diode must be rated higher than the circuit voltage.
*2: Refrain from assigning functions to terminals M1 and M2 that involve frequent switching, as doing so may shorten relay performance life. Switching life is estimated at 200,000 times (assumes 1 A, resistive load).

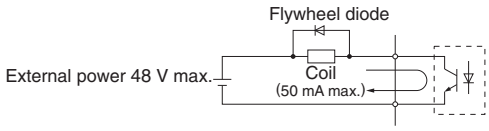

Serial Communication Terminals (200 V/400 V Class)

Classification	Terminal	Signal Function	Description	Signal Level
MEMOBUS/ Modbus Communications	R+	Communications input (+)	MEMOBUS/Modbus communications: Use a RS-485 or RS-422 cable to connect the drive.	RS-422/485 MEMOBUS/Modbus communications protocol 115.2 kbps (max.)
	R–	Communications input (–)		
	S+	Communications output (+)		
	S–	Communications output (–)		
	IG	Shield ground	0 V	

Enclosures

Enclosures of standard products vary depending on the model. Refer to the table below.

200 V Class

Model CIMR-AA2A□□□□		0004	0006	0008	0010	0012	0018	0021	0030	0040	0056	0069	0081	0110	0138	0169	0211
Max. Applicable Motor Capacity (kW)	Normal Duty	0.75	1.1	1.5	2.2	3	3.7	5.5	7.5	11	15	18.5	22	30	37	45	55
	Heavy Duty	0.4	0.75	1.1	1.5	2.2	3	3.7	5.5	7.5	11	15	18.5	22	30	37	45
Enclosure Panel【NEMA Type1】		Standard												Made to order			
Open-Chassis【IP00】		Without top and bottom covers												Standard			

400 V Class

Model CIMR-AA4A□□□□		0002	0004	0005	0007	0009	0011	0018	0023	0031	0038	0044	0058	0072	0088	0103	0139	0165
Max. Applicable Motor Capacity (kW)	Normal Duty	0.75	1.5	2.2	3	3.7	5.5	7.5	11	15	18.5	22	30	37	45	55	75	90
	Heavy Duty	0.4	0.75	1.5	2.2	3	3.7	5.5	7.5	11	15	18.5	22	30	37	45	55	75
Enclosure Panel【NEMA Type1】		Standard											Made to order					
Open-Chassis【IP00】		Without top and bottom covers											Standard					

■Open-Chassis【IP00】

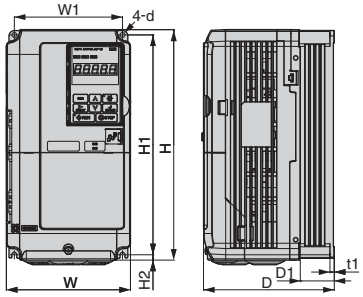

Figure 1

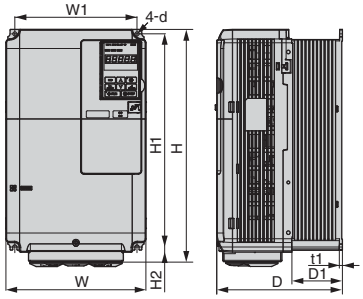

Figure 2

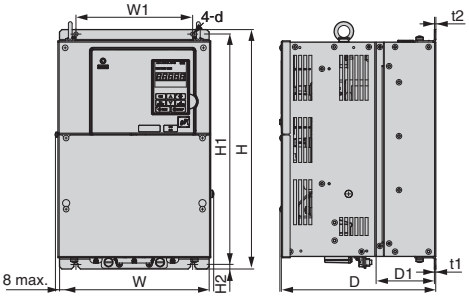

Figure 3

200 V Class

Model CIMR-AA2A□□□□	Max. Applicable Motor Capacity (kW) Normal Duty	Heavy Duty	Figure	Dimensions (mm) W	H	D	W1	H1	H2	D1	t1	t2	d	Weight (kg)	Cooling
0004	0.75	0.4	1	140	260	147	122	248	6	38	5	–	For M5	3.1	Self cooling
0006	1.1	0.75													
0008	1.5	1.1												3.2	
0010	2.2	1.5													
0012	3	2.2													
0018	3.7	3		140	260	164	122	248	6	55	5	–		3.5	Fan cooled
0021	5.5	3.7													
0030	7.5	5.5				167								4.0	
0040	11	7.5													
0056	15	11		180	300	187	160	284	8	75	5	–		5.6	
0069	18.5	15	1	220	350	197	192	335	8	78	5	–	For M6	8.7	
0081	22	18.5	2	220	365	197	192	335	8	78	5	–		9.7	
0110	30	22	3	250	400	258	195	385	7.5	100	2.3	2.3		21	
0138	37	30		275	450	258	220	435						25	
0169	45	37		325	550	283	260	535	7.5	110	2.3	2.3		37	
0211	55	45												38	

400 V Class

Model CIMR-AA4A□□□□	Max. Applicable Motor Capacity (kW) Normal Duty	Heavy Duty	Figure	Dimensions (mm) W	H	D	W1	H1	H2	D1	t1	t2	d	Weight (kg)	Cooling
0002	0.75	0.4	1	140	260	147	122	248	6	38	5	–	For M5	3.2	Self cooling
0004	1.5	0.75													
0005	2.2	1.5													
0007	3	2.2		140	260	164	122	248	6	55	5	–		3.4	Fan cooled
0009	3.7	3												3.5	
0011	5.5	3.7													
0018	7.5	5.5		140	260	167	122	248	6	55	5	–		3.9	
0023	11	7.5													
0031	15	11		180	300	167	160	284	8	55	5	–		5.4	
0038	18.5	15				187				75				5.7	
0044	22	18.5		220	350	197	192	335	8	78	5	–	For M6	8.3	
0058	30	22	3	250	400	258	195	385	7.5	100	2.3	2.3		21	
0072	37	30		275	450		220	435						25	
0088	45	37		325	510	258	260	495	7.5	105	2.3	3.2		36	
0103	55	45													
0139	75	55		325	550	283	260	535		110		2.3		41	
0165	90	75												42	

■Enclosure Panel【NEMA Type1】

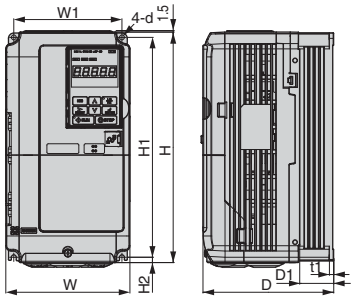

Figure 1

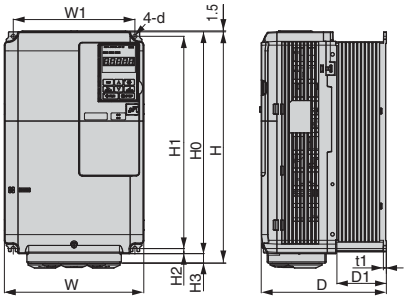

Figure 2

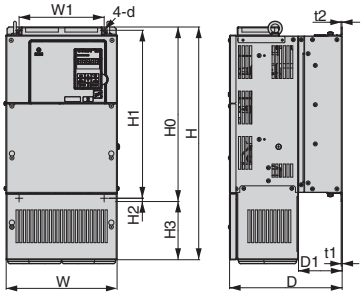

Figure 3

200 V Class

Model CIMR-AA2A□□□□	Max. Applicable Motor Capacity (kW) Normal Duty	Heavy Duty	Figure	Dimensions (mm) W	H	D	W1	H0	H1	H2	H3	D1	t1	t2	d	Weight (kg)	Cooling
0004	0.75	0.4	1	140	260	147	122	–	248	6	–	38	5	–	For M5	3.1	Self cooling
0006	1.1	0.75															
0008	1.5	1.1														3.2	
0010	2.2	1.5															
0012	3.0	2.2															
0018	3.7	3.0		140	260	164	122	–	248	6	–	55	5	–		3.5	Fan cooled
0021	5.5	3.7												–			
0030	7.5	5.5				167								–		4.0	
0040	11	7.5												–			
0056	15	11		180	300	187	160	–	284	8	–	75	5	–		5.6	
0069	18.5	15	1	220	350	197	192	–	335	8	–	78	5	–	For M6	8.7	
0081	22	18.5	2		365	197	192	350	335	8	15	78	5	–		9.7	
0110	30	22	3	254	534	258	195	400	385	7.5	134	100	2.3	2.3		23	
0138	37	30		279	614		220	450	435		164					28	
0169	45	37		329	730	283	260	550	535		180	110				41	
0211	55	45														42	

400 V Class

Model CIMR-AA4A□□□□	Max. Applicable Motor Capacity (kW) Normal Duty	Heavy Duty	Figure	Dimensions (mm) W	H	D	W1	H0	H1	H2	H3	D1	t1	t2	d	Weight (kg)	Cooling
0002	0.75	0.4	1	140	260	147	122	–	248	6	–	38	5	–	For M5	3.2	Self cooling
0004	1.5	0.75															
0005	2.2	1.5															
0007	3.0	2.2		140	260	164	122	–	248	6	–	55	5	–		3.4	Fan cooled
0009	3.7	3.0														3.5	
0011	5.5	3.7															
0018	7.5	5.5				167										3.9	
0023	11	7.5															
0031	15	11		180	300		160	–	284	8	–	55	5	–		5.4	
0038	18.5	15				187						75				5.7	
0044	22	18.5		220	350	197	192	–	335	8	–	78	5	–	For M6	8.3	
0058	30	22	3	254	465	258	195	400	385	7.5	65	100	2.3	2.3		23	
0072	37	30		279	515	258	220	450	435							27	
0088	45	37		329	630	258	260	510	495		120	105		3.2		39	
0103	55	45															
0139	75	55			730	283		550	535		180	110		2.3		45	
0165	90	75														46	

A Fully-Enclosed Design

The Open-Chassis type drive can be installed in a fully-enclosed panel.

The heatsink can be mounted outside the enclosure panel, thus reducing the amount of heat inside the panel and allowing for a more compact set up.

To keep temperature levels in the enclosure within the ranges specified in the figure below, current derating or other steps to ensure cooling may be required. Be sure to leave enough clearance during installation for ventilation and proper cooling as well as access to wiring for maintenance.

· Cooling Design for Fully-Closed Enclosure Panel

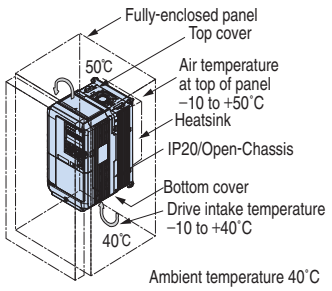

· Mounting the External Heatsink

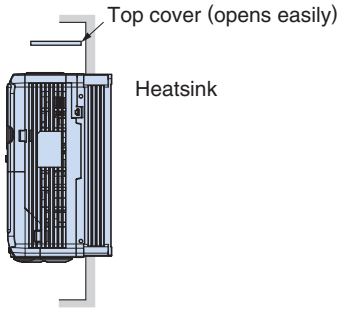

Note: 1 A separate mounting bracket option is required to install the heatsink outside the enclosure.
Refer to the following page.
2 Wall-mount enclosure models (CIMR-AA2A0004 to 0081, CIMR-AA4A0002 to 0044) can be installed with the top and bottom covers removed.

· Ventilation Space

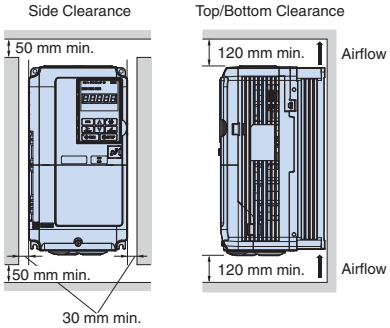

For installing the drive with capacity of 200 V class 22 kW or 400 V class 22kW, be sure to leave enough clearance during installation for suspension eye bolts on both side of the unit and main circuit wiring for maintenance.

Drive Watts Loss Data

Normal Duty Ratings

Voltage Class	Model Number CIMR-AA2A□□□□□□			0004	0006	0008	0010	0012	0018	0021	0030	0040	0056	0069	0081	0110	0138	0169	0211
200 V	Max. Applicable Motor Capacity		kW	0.75	1.1	1.5	2.2	3	3.7	5.5	7.5	11	15	18.5	22	30	37	45	55
	Rated Output Current*		A	3.5	6	8	9.6	12	17.5	21	30	40	56	69	81	110	138	169	211
	Heat Loss	Heatsink	W	18	31	43	57	77	101	138	262	293	371	491	527	718	842	1014	1218
		Internal	W	47	51	52	58	64	67	83	117	144	175	204	257	286	312	380	473
		Total Heat Loss	W	65	82	95	115	141	168	221	379	437	546	696	784	1004	1154	1394	1691

Voltage Class	Model Number CIMR-AA4A□□□□□□			0002	0004	0005	0007	0009	0011	0018	0023	0031	0038	0044	0058	0072	0088	0103	0139	0165
400 V	Max. Applicable Motor Capacity		kW	0.75	1.5	2.2	3	3.7	5.5	7.5	11	15	18.5	22	30	37	45	55	75	90
	Rated Output Current*		A	2.1	4.1	5.4	6.9	8.8	11.1	17.5	23	31	38	44	58	72	88	103	139	165
	Heat Loss	Heatsink	W	20	32	45	62	66	89	177	216	295	340	390	471	605	684	848	1215	1557
		Internal	W	48	49	53	59	60	73	108	138	161	182	209	215	265	308	357	534	668
		Total Heat Loss	W	68	81	98	121	126	162	285	354	456	522	599	686	870	992	1205	1749	2225

* Rated output current based on carrier frequency of 2 kHz.

Heavy Duty Ratings

Voltage Class	Model Number CIMR-AA2A□□□□□□			0004	0006	0008	0010	0012	0018	0021	0030	0040	0056	0069	0081	0110	0138	0169	0211
200 V	Max. Applicable Motor Capacity		kW	0.4	0.75	1.1	1.5	2.2	3	3.7	5.5	7.5	11	15	18.5	22	30	37	45
	Rated Output Current		A	3.2*1	5*1	6.9*1	8*1	11*1	14*1	17.5*1	25*1	33*1	47*1	60*1	75*1	85*1	115*1	145*1	180*2
	Heat Loss	Heatsink	W	15	24	35	43	64	77	101	194	214	280	395	460	510	662	816	976
		Internal	W	44	48	49	52	58	60	67	92	105	130	163	221	211	250	306	378
		Total Heat Loss	W	59	72	84	95	122	137	168	287	319	410	558	681	721	912	1122	1354

Voltage Class	Model Number CIMR-AA4A□□□□□□			0002	0004	0005	0007	0009	0011	0018	0023	0031	0038	0044	0058	0072	0088	0103	0139	0165
400 V	Max. Applicable Motor Capacity		kW	0.4	0.75	1.5	2.2	3	3.7	5.5	7.5	11	15	18.5	22	30	37	45	55	75
	Rated Output Current		A	1.8*1	3.4*1	4.8*1	5.5*1	7.2*1	9.2*1	14.8*1	18*1	24*1	31*1	39*1	45*1	60*1	75*1	91*1	112*1	150*2
	Heat Loss	Heatsink	W	16	25	37	48	53	68	135	150	208	263	330	348	484	563	723	908	1340
		Internal	W	45	46	49	53	55	61	86	97	115	141	179	170	217	254	299	416	580
		Total Heat Loss	W	61	71	86	101	108	129	221	247	323	404	509	518	701	817	1022	1324	1920

*1: Rated output current based on carrier frequency of 8 kHz.
*2: Rated output current based on carrier frequency of 5 kHz.

Attachment for External Heatsink

Additional attachments are required to install the following models: CIMR-AA2A0004 to 0081, CIMRAA4A0002 to 0044. The final product will be wider and taller than the drive.

Note: Contact Yaskawa for information on attachments for earlier models.

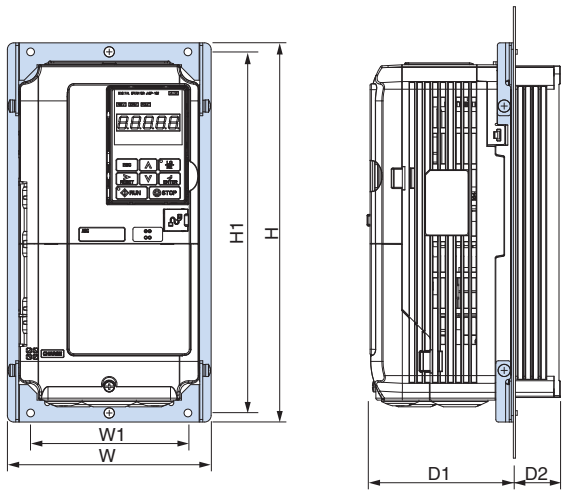

200 V Class

Model CIMR-AA2A	Dimension (mm) W	H	W1	H1	D1	D2	Code No.
0004	158	294	122	280	109	36.4	Available soon
0006							
0008							
0010							
0012							
0018					109	53.4	
0021							
0030					112	53.4	
0040							
0056	198	329	160	315	112	73.4	
0069	238	380	192	362	119	76.4	
0081							

400 V Class

Model CIMR-AA4A	Dimension (mm) W	H	W1	H1	D1	D2	Code No.
0002	158	294	122	280	109	36.4	Available soon
0004							
0005							
0007					109	53.4	
0009							
0011							
0018					112	53.4	
0023							
0031	198	329	160	315	112	53.4	
0038					112	73.4	
0044	238	380	192	362	119	76.4	

Panel Modification for External Heatsink

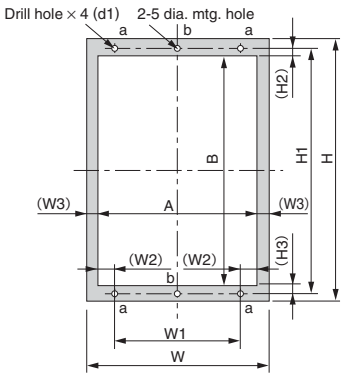

Modification Figure 1

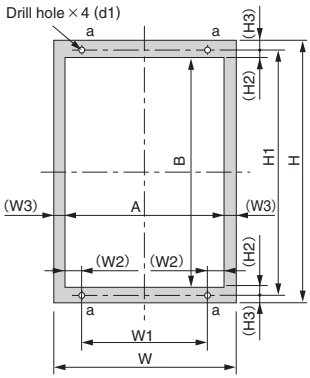

Modification Figure 2

200 V Class

Model CIMR-AA2A	Modification Figure	Dimensions (mm) W	H	W1	(W2)	(W3)	H1	(H2)	(H3)	A	B	d1
0004	1	158	294	122	9	9	280	8.5	8.5	140	263	M5
0006												
0008												
0010												
0012												
0018												
0021												
0030												
0040												
0056	1	198	329	160	10	9	315	17.5	10.5	180	287	M5
0069	1	238	380	192	14	9	362	13	8	220	341	M6
0081												
0110	2	250	400	195	19.5	8	385	8	7.5	234	369	
0138		275	450	220			435			259	419	
0169		325	550	260	24.5	8	535	8	7.5	309	519	
0211												

400 V Class

Model CIMR-AA4A	Modification Figure	Dimensions (mm) W	H	W1	(W2)	(W3)	H1	(H2)	(H3)	A	B	d1
0002	1	158	294	122	9	9	280	8.5	8.5	140	263	M5
0004												
0005												
0007												
0009												
0011												
0018												
0023												
0031	1	198	329	160	10	9	315	17.5	10.5	180	287	
0038												
0044	1	238	380	192	14	9	362	13	8	220	341	M6
0058	2	250	400	195	19.5	8	385	8	7.5	234	369	M6
0072		275	450	220			435			259	419	
0088	2	325	510	260	24.5	8	495	8	7.5	309	479	M6
0103												
0139			550				535				519	
0165												

A Peripheral Devices and Options

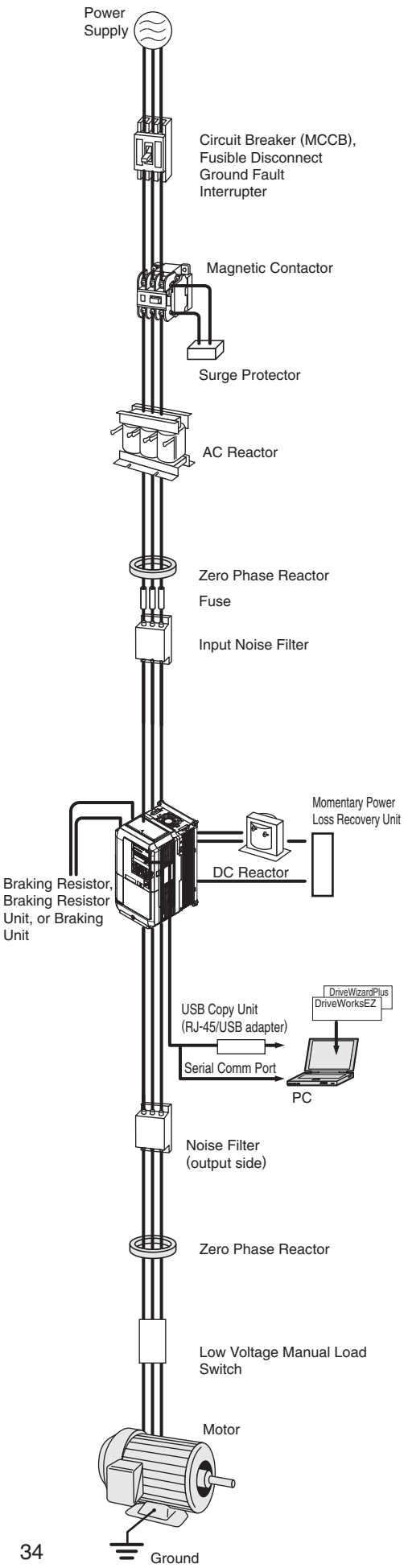

Name	Purpose	Model, Manufacturer	Page
Circuit Breaker	Protects circuitry from excessive current. A circuit breaker should be installed between the main power supply and an AC reactor.	Recommended: NF series by Mitsubishi Electric Corporation	P.36
Ground Fault Interrupter (GFI)	Choose a GFI designed for use with a frequency meter. Should be designed for use with AC drives and have a current rating of at least 30 mA.	Recommended: NV series by Mitsubishi Electric Corporation EG, SG series by Fuji Electric FA Components & Systems Co., Ltd	—
Magnetic Contactor	Interrupts the power supply to the drive. In addition to protecting drive circuitry, a magnetic contactor also prevents damage to a braking resistor if used.	Recommended: SC series by Fuji Electric FA Components & Systems Co., Ltd	P.36
Surge Protector	Absorbs the voltage surge from switching of electro-magnetic contactors and control relays. Install a surge protector to the magnetic contactors and control relays as well as magnetic valves and magnetic braking coil.	DCR2 series RFN series by Nippon Chemi-con Corporation	P.37
DC Reactor	Improve the input power ratio of the drive. The DC reactor is a built-in model of 22 kW or more. Option: 18.5 kW or less. · Used for harmonic current suppression and total improving power factor. Should be used if the power supply capacity is larger than 600 kVA. · Suppresses harmonic current · Improves the power factor of the input power supply	UZDA series	P.38
AC Reactor		UZBA series	P.39
Zero Phase Reactor	Reduces noise from the line that enters into the drive input power system. Should be installed as close as possible to the drive. Can be used on both the input and output sides.	F6045GB F11080GB by Hitachi Metals, Ltd.	P.40
Fuse / Fuse Holder	Protects internal circuitry in the event of component failure. Fuse should be connected to the input terminal of the drive.	CR2LS series CR6L series CM, CMS series by Fuji Electric FA Components & Systems Co., Ltd	P.41
Capacitor-Type Noise Filter	Reduces noise from the line that enters into the drive input power system. The noise filter can be used in combination with a zero-phase reactor. Note: Available for drive input only. Do not connect the noise filter to the output terminals.	3XYG 1003 by Okaya Electric Industries Co., Ltd.	P.41
Input Noise Filter	Reduces noise from the line that enters into the drive input power system. Should be installed as close as possible to the drive.	LNFD series LNFB series FN series For CE Marking (EMC Directive) compliant models, refer to A1000 Technical Manual.	P.42
Output Noise Filter	Reduces noise from the line that enters into the drive input power system. Should be installed as close as possible to the drive.	LF series by NEC Tokin Corporation	P.44
Braking Resistor	Used to shorten the deceleration time by dissipating regenerative energy through a resistor in (3% ED).	ERF-150WJ series	P.46
Braking Resistor Unit	Used to shorten the deceleration time by dissipating regenerative energy through a resistor. A thermal overload relay is built in (10% ED).	LKEB series	P.46
Braking Unit	Shortened deceleration time results when used with a Braking Resistor Unit.	CDBR series	P.46
24 V Power Supply	Provides power supply for the control circuit and option boards. Note: Parameter settings cannot be changed when the drive is operating solely from this power supply.	PS-A10H PS-A10L Available soon	P.45
VS System Module	System control device that enables optimum system configuration by combining modules for automatic control system.	JGSM series	P.50
USB Copy Unit (RJ-45/USB compatible plug)	· Adapter for connecting the drive to the USB port of a PC · Can copy parameter settings easily and quickly to be later transferred to another drive.	JVOP-181	P.53
Support Tools USB Cable	Connect the drive and PC when using DriveWizard or DriveWorksEZ. The cable length must be 3 m or less.	Commercially available USB2.0 A/B cable.	—
LCD Operator	For easier operation when using the optional LCD operator. Allows for remote operation. Includes a Copy function for saving drive settings.	JVOP-180	P.52
LCD Operator Extension Cable	Cable for connecting the LCD operator.	WV001: 1 m WV003: 3 m	P.52
Momentary Power Loss Recovery Unit	Ensures continuous drive operation for a power loss of up to 2 s.	P0010 Type (200 V class) P0020 Type (400 V class)	P.45
Frequency Meter, Current Meter	Allows the user to set and monitor the frequency, current, and voltage using an external device.	DCF-6A	P.54
Frequency Setting Potentiometer (2 kΩ)		RH000739	P.54
Frequency Meter Adjusting Potentiometer (20 kΩ)		RH000850	P.54
Control Dial for Frequency Setting Potentiometer		CM-3S	P.54
Output Voltage Meter		SCF-12NH	P.55
Attachment for External Heatsink	Required for heatsink installation. Current derating may be needed when using a heatsink.	–	P.33
Low Voltage Manual Load Switch	Prevents shock from the voltage created on the terminals board from a coasting synchronous motor.	Recommended: AICUT, LB series by Aichi Electric Works Co., Ltd	—

Note: Contact the manufacturer in question for availability and specifications of non-Yaskawa products.

Option Cards

Type		Name	Model	Function	Manual No.
Built-in Type (connected to connector)	Speed Reference Card	Analog Input (RoHS compliant)	AI-A3	Enables high-precision and high-resolution analog speed reference setting. · Input signal level: −10 to +10 Vdc (20 kΩ) 4 to 20 mA (500 Ω) · Input channels: 3 channels, DIP switch for input voltage/input current selection · Input resolution: Input voltage 13 bit signed (1/8192) Input current 1/6554	TOBPC73060038
		Digital Input (RoHS compliant)	DI-A3	Enables 16-bit digital speed reference setting. · Input signal: 16 bit binary, 2 digit BCD + sign signal + set signal · Input voltage: +24 V (isolated) · Input current: 8 mA User-set: 8 bit, 12 bit, 16 bit	TOBPC73060039
	Communications Option Card	DeviceNet Interface (RoHS compliant)	SI-N3	Used for running or stopping the drive, setting or referencing parameters, and monitoring output frequency, output current, or similar items through DeviceNet communication with the host controller.	TOBPC73060043 SIEPC73060043
		CC-Link Interface (RoHS compliant)	SI-C3	Used for running or stopping the drive, setting or referencing parameters, and monitoring output frequency, output current, or similar items through CC-Link communication with the host controller.	TOBPC73060044 SIEPC73060044
		CANopen Interface (RoHS compliant)	SI-S3	Used for running or stopping the drive, setting or referencing parameters, and monitoring output frequency, output current, or similar items through CANopen communication with the host controller.	TOBPC73060045 SIEPC73060045
		MECHATROLINK-Ⅱ Interface	Available soon	Used for running or stopping the drive, setting or referencing parameters, and monitoring output frequency, output current, or similar items through MECHATROLINK-Ⅱ communication with the host controller.	–
		LONWORKS Interface	Available soon	Used for HVAC control, running or stopping the drive, setting or referencing parameters, and monitoring output current, watt-hours, or similar items through LONWORKS communications with the host controller.	–
		PROFIBUS-DP Interface (RoHS compliant)	SI-S3	Used for running or stopping the drive, setting or referencing parameters, and monitoring output frequency, output current, or similar items through CANopen communication with the host controller.	TOBPC73060045 SIEPC73060045
	Monitor Option Card	Analog Monitor (RoHS compliant)	AO-A3	Outputs analog signal for monitoring drive output state (output freq., output current etc.). · Output resolution: 11 bit signed (1/2048) · Output voltage: −10 to +10 Vdc (non-isolated) · Terminals: 2 analog outputs	TOBPC73060040
		Digital Output (RoHS compliant)	DO-A3	Outputs isolated type digital signal for monitoring drive run state (alarm signal, zero speed detection, etc.) · Terminals: 6 photocoupler outputs (48 V, 50 mA or less) 2 relay contact outputs (250 Vac, 1 A or less 30 Vdc, 1 A or less)	TOBPC73060041
	PG Speed Controller Card	Complimentary Type PG (RoHS compliant)	PG-B3	For control modes requiring a PG encoder for motor feedback. · Phase A, B, and Z pulse (3-phase) inputs (complementary type) · Max. input frequency: 50 kHz · Power supply output for PG: +24 V, max. current 30 mA · Pulse monitor output: Open collector, +24 V, max. current 30 mA · Power supply output for PG: +12 V, max. current 200 mA	TOBPC73060036
		Line Driver PG (RoHS compliant)	PG-X3	For control modes requiring a PG encoder for motor feedback. · Phase A, B, and Z pulse (differential pulse) inputs (RS-422) · Max. input frequency: 300 kHz · Pulse monitor output: RS-422 · Power supply output for PG: +5 V or +12 V, max. current 200 mA	TOBPC73060037

Note: 1. Each communication option card requires a separate configuration file to link to the network.
2. PG speed controller card is required for PG control.

Circuit Breaker, Magnetic Contactor

Base device selection on motor capacity.

Circuit Breaker
【Mitsubishi Electric Corporation】

Magnetic Contactor
【Fuji Electric FA Components & Systems Co., Ltd】

200 V Class

Motor Capacity (kW)	Circuit Breaker				Magnetic Contactor			
	Without Reactor		With Reactor		Without Reactor		With Reactor	
	Model	Rated Current (A)	Model	Rated Current (A)	Model	Rated Current (A)	Model	Rated Current (A)
0.4	NF32	5	NF32	5	SC-03	11	SC-03	11
0.75	NF32	10	NF32	10	SC-03	13	SC-03	11
1.5	NF32	15	NF32	10	SC-4-0	18	SC-05	13
2.2	NF32	20	NF32	15	SC-N1	26	SC-4-0	18
3.7	NF32	30	NF32	20	SC-N2	35	SC-N1	26
5.5	NF63	50	NF63	40	SC-N2S	50	SC-N2	35
7.5	NF125	60	NF63	50	SC-N3	65	SC-N2S	50
11	NF125	75	NF125	75	SC-N4	80	SC-N4	80
15	NF250	125	NF125	100	SC-N5	93	SC-N4	80
18.5	NF250	150	NF250	125	SC-N5	93	SC-N5	93
22	–	–	NF250	150	–	–	SC-N6	125
30	–	–	NF250	175	–	–	SC-N7	152
37	–	–	NF250	225	–	–	SC-N8	180
45	–	–	NF400	250	–	–	SC-N10	220
55	–	–	NF400	300	–	–	SC-N11	300

Note: To improve the input power factor, 200 V class drives larger than 22 kW come standard with a built-in DC reactor.

400 V Class

Motor Capacity (kW)	Circuit Breaker				Magnetic Contactor			
	Without Reactor		With Reactor		Without Reactor		With Reactor	
	Model	Rated Current (A)	Model	Rated Current (A)	Model	Rated Current (A)	Model	Rated Current (A)
0.4	NF32	3	NF32	3	SC-03	7	SC-03	7
0.75	NF32	5	NF32	5	SC-03	7	SC-03	7
1.5	NF32	10	NF32	10	SC-05	9	SC-05	9
2.2	NF32	15	NF32	10	SC-4-0	13	SC-4-0	13
3	NF32	20	NF32	15	SC-4-1	17	SC-4-1	17
3.7	NF32	20	NF32	15	SC-4-1	17	SC-4-1	17
5.5	NF32	30	NF32	20	SC-N2	32	SC-N1	25
7.5	NF32	30	NF32	30	SC-N2S	48	SC-N2	32
11	NF63	50	NF63	40	SC-N2S	48	SC-N2S	48
15	NF125	60	NF63	50	SC-N3	65	SC-N2S	48
18.5	NF125	75	NF125	60	SC-N3	65	SC-N3	65
22	–	–	NF125	75	–	–	SC-N4	80
30	–	–	NF125	100	–	–	SC-N4	80
37	–	–	NF250	125	–	–	SC-N5	90
45	–	–	NF250	150	–	–	SC-N6	110
55	–	–	NF250	175	–	–	SC-N7	150
75	–	–	NF250	225	–	–	SC-N8	180
90	–	–	NF400	250	–	–	SC-N10	220

Note: To improve the input power factor, 400 V class drives larger than 22 kW come standard with a built-in DC reactor.

Surge Protector

Dimensions (mm)

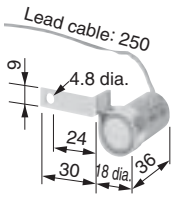

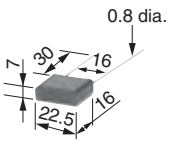

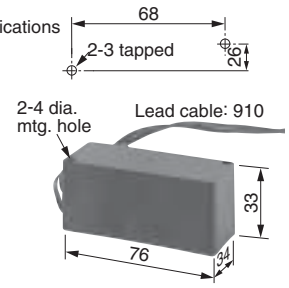

Weight: 22 g
Model: DCR2-50A22E

Weight: 5 g
Model: DCR2-10A25C

Weight: 150 g
Model: RFN3AL504KD

【Nippon Chemi-Con Corporation】

Product Line

Peripheral Devices \ Surge Protector			Model	Specifications	Code No.
200 to 230 V	Large-Capacity Coil (other than relay)		DCR2-50A22E	220 Vac 0.5 μF+200 Ω	C002417
	Control Relay	MY2, MY3【Omron Corporation】 MM2, MM4【Omron Corporation】 HH22, HH23【Fuji Electric FA Components & Systems Co., Ltd】	DCR2-10A25C	250 Vac 0.1 μF+100 Ω	C002482
380 to 460 V			RFN3AL504KD	1000 Vdc 0.5 μF+220 Ω	C002630

DC Reactor (UZDA-B for DC circuit)

Base device selection on motor capacity.

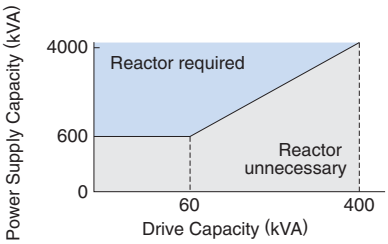

Note: Reactor recommended for power supplies larger than 600 kVA.

Connection Diagram

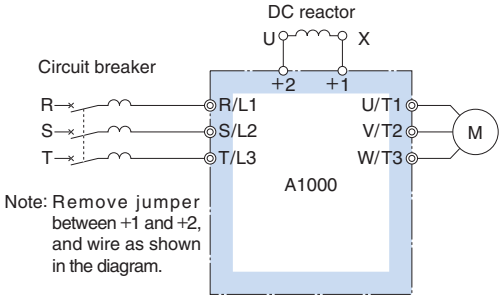

Note: Remove jumper between +1 and +2, and wire as shown in the diagram.

Dimensions (mm)

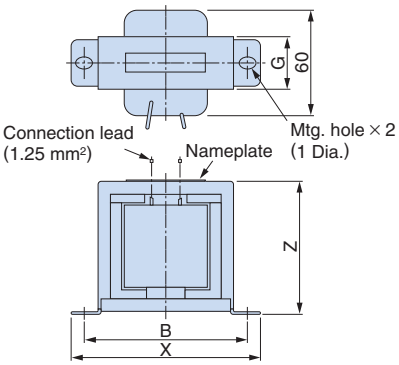

Figure 1

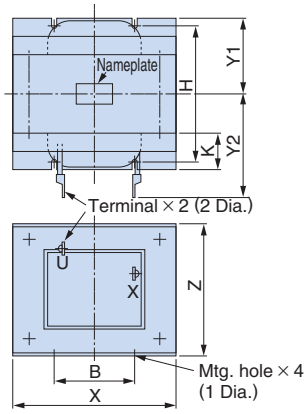

Figure 2

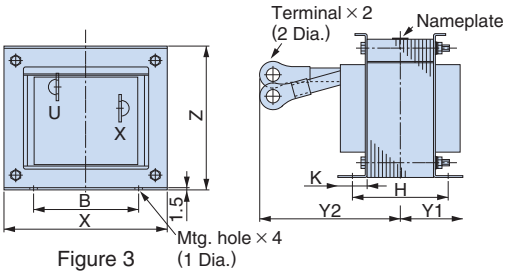

Figure 3

200 V Class

Motor Capacity (kW)	Current (A)	Inductance (mH)	Code No.	Figure	Dimensions (mm) X	Y2	Y1	Z	B	H	K	G	1 Dia.	2 Dia.	Weight (kg)	Watt Loss (W)	Wire Gauge*1 (mm²)
0.4	5.4	8	X010048	1	85	–	–	53	74	–	–	32	M4	–	0.8	8	2
0.75	5.4	8	X010048	1	85	–	–	53	74	–	–	32	M4	–	0.8	8	2
1.5	18	3	X010049	2	86	80	36	76	60	55	18	–	M4	M5	2	18	5.5
2.2	18	3	X010049	2	86	80	36	76	60	55	18	–	M4	M5	2	18	5.5
3.7	18	3	X010049	2	86	80	36	76	60	55	18	–	M4	M5	2	18	5.5
5.5	36	1	X010050	2	105	90	46	93	64	80	26	–	M6	M6	3.2	22	8
7.5	36	1	X010050	2	105	90	46	93	64	80	26	–	M6	M6	3.2	22	8
11	72	0.5	X010051	2	105	105	56	93	64	100	26	–	M6	M8	4.9	29	30
15	72	0.5	X010051	2	105	105	56	93	64	100	26	–	M6	M8	4.9	29	30
18.5	90	0.4	X010176	2	133	120	52.5	117	86	80	25	–	M6	M8	6.5	45	30
22*2	105	0.3	300-028-140	3	133	120	52.5	117	86	80	25	–	M6	M10	8	55	50
22 to 55	Built-in																

*1: Cable: IV, 75˚C, ambient temperature 45˚C, 3 lines max.
*2: Select a motor of this capacity when using a CIMR-AA2A0081.

400 V Class

Motor Capacity (kW)	Current (A)	Inductance (mH)	Code No.	Figure	Dimensions (mm) X	Y2	Y1	Z	B	H	K	G	1 Dia.	2 Dia.	Weight (kg)	Watt Loss (W)	Wire Gauge*1 (mm²)
0.4	3.2	28	X010052	1	85	–	–	53	74	–	–	32	M4	–	0.8	9	2
0.75	3.2	28	X010052	1	85	–	–	53	74	–	–	32	M4	–	0.8	9	2
1.5	5.7	11	X010053	1	90	–	–	60	80	–	–	32	M4	–	1	11	2
2.2	5.7	11	X010053	1	90	–	–	60	80	–	–	32	M4	–	1	11	2
3	12	6.3	X010054	2	86	80	36	76	60	55	18	–	M4	M5	2	16	2
3.7	12	6.3	X010054	2	86	80	36	76	60	55	18	–	M4	M5	2	16	2
5.5	23	3.6	X010055	2	105	90	46	93	64	80	26	–	M6	M5	3.2	27	5.5
7.5	23	3.6	X010055	2	105	90	46	93	64	80	26	–	M6	M5	3.2	27	5.5
11	33	1.9	X010056	2	105	95	51	93	64	90	26	–	M6	M6	4	26	8
15	33	1.9	X010056	2	105	95	51	93	64	90	26	–	M6	M6	4	26	8
18.5	47	1.3	X010177	2	115	125	57.5	100	72	90	25	–	M6	M6	6	42	14
22*2	56	1	300-028-141	3	133	105	52.5	117	86	80	25	–	M6	M6	7	50	22
22 to 55	Built-in																

*1: Cable: IV, 75˚C, ambient temperature 45˚C, 3 lines max.
*2: Select a motor of this capacity when using a CIMR-AA4A0044.

AC Reactor (UZBA-B for 50/60 Hz Input)

Base device selection on motor capacity.

Connection Diagram

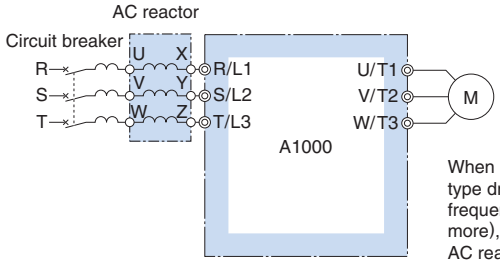

When using low noise type drives (high-carrier frequency of 2.5 kHz or more), do not connect an AC reactor to the output side (U, V, W) of the drive.

Dimensions (mm)

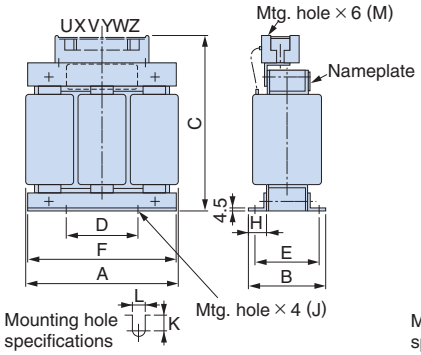

Figure 1

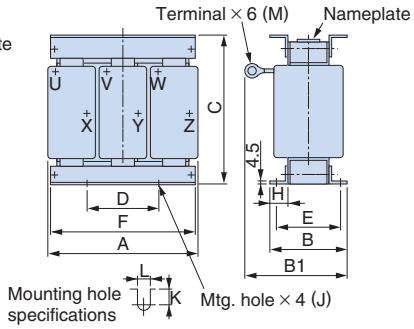

Figure 2

200 V Class

Motor Capacity (kW)	Current (A)	Inductance (mH)	Code No.	Figure	Dimensions (mm) A	B	B1	C	D	E	F	H	J	K	L	M	Weight (kg)	Watt Loss (W)
0.4	2.5	4.2	X002553	1	120	71	–	120	40	50	105	20	M6	10.5	7	M4	2.5	15
0.75	5.0	2.1	X002554															
1.5	10	1.1	X002489		130	88	–	130	50	70	130	22	M6	11.5	7	M4	3	25
2.2	15	0.71	X002490															30
3.7	20	0.53	X002491	2	130	88	114	105	50	70	130	22	M6	11.5	7	M5	3	35
5.5	30	0.35	X002492				119							9			3	45
7.5	40	0.265	X002493			98	139			80				11.5		M6	4	50
11	60	0.18	X002495		160	105	147.5	130	75	85	160	25	M6	10	7	M6	6	65
15	80	0.13	X002497		180	100	155	150	75	80	180	25	M6	10	7	M8	8	75
18.5	90	0.12	X002498				150											90
22	120	0.09	X002555				155									M10		
30	160	0.07	X002556		210	100	170	175	75	80	205	25	M6	10	7	M10	12	100
37	200	0.05	X002557			115	183			95							15	110
45	240	0.044	X002558		240	126	218	215±5	150	110	240	25	M6	8	7	M10	23	125
55	280	0.038	X002559										M8		10	M12		130

400 V Class

Motor Capacity (kW)	Current (A)	Inductance (mH)	Code No.	Figure	Dimensions (mm) A	B	B1	C	D	E	F	H	J	K	L	M	Weight (kg)	Watt Loss (W)
0.4	1.3	18	X002561	1	120	71	–	120	40	50	105	20	M6	10.5	7	M4	2.5	15
0.75	2.5	8.4	X002562															
1.5	5.0	4.2	X002563		130	88	–	130	50	70	130	22	M6	9	7	M4	3	25
2.2	7.5	3.6	X002564															35
3	10	2.2	X002500											11.5				40
3.7	10	2.2	X002500															
5.5	15	1.42	X002501			98				80							4	50
7.5	20	1.06	X002502	2	160	90	115	130	75	70	160	25	M6	10	7	M5	5	50
11	30	0.7	X002503			105	132.5			85							6	65
15	40	0.53	X002504		180	100	140	150	75	80	180	25	M6	10	7	M6	8	90
18.5	50	0.42	X002505				145											
22	60	0.36	X002506				150										8.5	
30	80	0.26	X002508		210	100	150	175	75	80	205	25	M6	10	7	M8	12	95
37	90	0.24	X002509			115	178			95							15	110
45	120	0.18	X002566		240	126	193	205±5	150	110	240	25	M8	8	10	M10	23	130
55	150	0.15	X002567				198											150
75	200	0.11	X002568		270	162	231	230±5	150	130	260	40	M8	16	10	M10	32	135
90	250	0.09	X002569															

Zero Phase Reactor

Base device selection on motor capacity. Compatible with the input and output side of the drive.

Finemet Zero-Phase Reactor to Reduce Radio Noise

Note: Finemet is a registered trademark of Hitachi Metals, Ltd.

【Hitachi Metals, Ltd.】

Connection Diagram

Example: Connection to output terminal

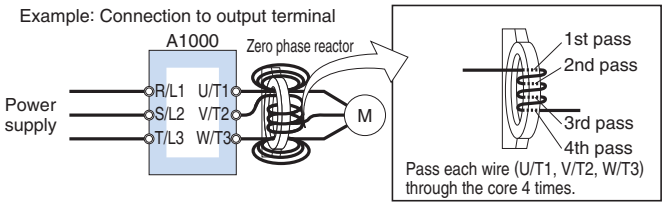

Diagram a

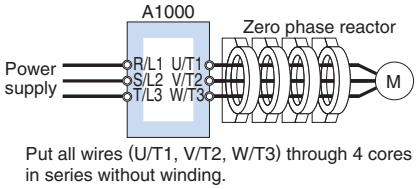

Diagram b

Dimensions (mm)

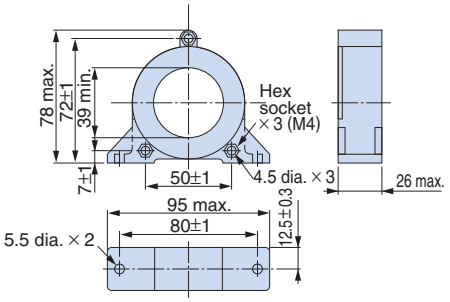

Weight: 195 g

Model: F6045GB

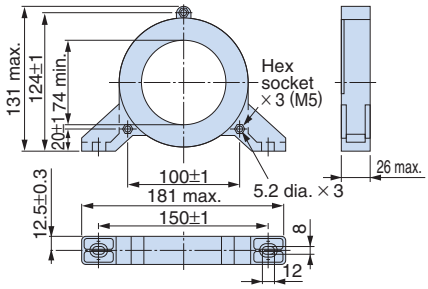

Weight: 620 g

Model: F11080GB

200 V Class

A1000			Zero Phase Reactor			
Motor Capacity (kW)	Recommended Gauge (mm²)		Model	Code No.	Qty.	Diagram
0.4	2	2	F6045GB	FIL001098	1	a
0.75	2	2	F6045GB	FIL001098	1	a
1.5	2	2	F6045GB	FIL001098	1	a
2.2	2	2	F6045GB	FIL001098	1	a
3.7	3.5	3.5	F6045GB	FIL001098	1	a
5.5	5.5	5.5	F6045GB	FIL001098	1	a
7.5	8	8	F11080GB	FIL001097	1	a
11	14	14	F6045GB	FIL001098	4	b
15	30	30	F6045GB	FIL001098	4	b
18.5	30	30	F6045GB	FIL001098	4	b
22	30	30	F6045GB	FIL001098	4	b
30	50	50	F11080GB	FIL001097	4	b
37	60	60	F11080GB	FIL001097	4	b
45	80	80	F11080GB	FIL001097	4	b
55	50×2P	100	F11080GB	FIL001097	4	b

400 V Class

A1000			Zero Phase Reactor			
Motor Capacity (kW)	Recommended Gauge (mm²)		Model	Code No.	Qty.	Diagram
0.4	2	2	F6045GB	FIL001098	1	a
0.75	2	2	F6045GB	FIL001098	1	a
1.5	2	2	F6045GB	FIL001098	1	a
2.2	2	2	F6045GB	FIL001098	1	a
3	3.5	3.5	F6045GB	FIL001098	1	a
3.7	3.5	3.5	F6045GB	FIL001098	1	a
5.5	3.5	3.5	F6045GB	FIL001098	1	a
7.5	5.5	5.5	F6045GB	FIL001098	1	a
11	8	8	F11080GB	FIL001097	1	a
15	8	8	F11080GB	FIL001097	1	a
18.5	8	8	F11080GB	FIL001097	1	a
22	14	14	F6045GB	FIL001098	4	b
30	22	22	F6045GB	FIL001098	4	b
37	38	38	F6045GB	FIL001098	4	b
45	38	38	F6045GB	FIL001098	4	b
55	50	50	F11080GB	FIL001097	4	b
75	60	60	F11080GB	FIL001097	4	b
90	100	100	F11080GB	FIL001097	4	b

Fuse and Fuse Holder

Install a fuse to the drive input terminals to prevent damage in case a fault occurs.

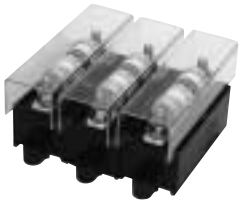

【Fuji Electric FA Components & Systems Co., Ltd】

200 V Class

Model CIMR-AA2A□□□□	Fuse Model	Fuse Qty.	Fuse Holder Model	Fuse Holder Qty.
0004	CR2LS-30	3	CM-1A	1
0006				
0008				
0010	CR2LS-50			
0012				
0018	CR2LS-75			
0021	CR2LS-100			
0030	CR2L-125	3	CM-2A	1
0040	CR2L-150			
0056	CR2L-175			
0069	CR2L-225	3	*	
0081	CR2L-260			
0110	CR2L-300			
0138	CR2L-350			
0169	CR2L-400			
0211	CR2L-450			

* Manufacturer does not recommend a specific fuse holder for this fuse. Contact the manufacturer for information on fuse dimensions.

400 V Class

Model CIMR-AA4A□□□□	Fuse Model	Fuse Qty.	Fuse Holder Model	Fuse Holder Qty.
0002	CR6L-20	3	CMS-4	3
0004	CR6L-30			
0005	CR6L-50			
0007				
0009				
0011				
0018	CR6L-75	3	CMS-5	3
0023				
0031	CR6L-100			
0038	CR6L-150			
0044				
0058	CR6L-200	3	*	
0072	CR6L-250			
0088				
0103	CR6L-300			
0139	CR6L-350			
0165	CR6L-400			

Capacitor-Type Noise Filter

Capacitor-type noise filter exclusively designed for drive input.

The noise filter can be used in combination with a zero-phase reactor. For both 200 V and 400 V classes.

Note: The capacitor-type noise filter can be used for drive input only. Do not connect the noise filter to the output terminals.

【Okaya Electric Industries Co., Ltd.】

Model	Code No.
3XYG 1003	C002889

Connection Diagram

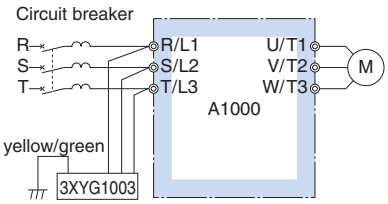

Dimensions (mm)

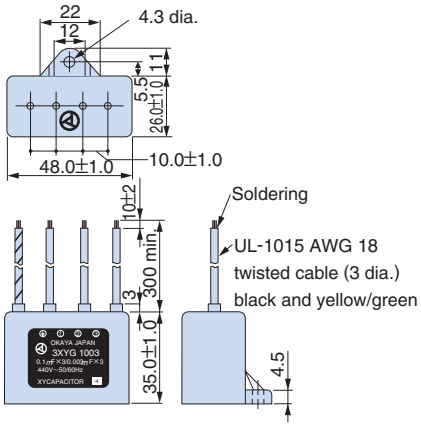

Specifications

Rated Voltage	Capacitance (3 devices each)	Operating Temperature (°C)
440 V	X (Δ connection) : 0.1 μF ± 20 % Y (⅄ connection) : 0.003 μF ± 20 %	− 40 to +85

Note: For use with 460 V and 480 V units, contact Yaskawa directly.

Noise Filter

Base device selection on motor capacity.

Input Noise Filter

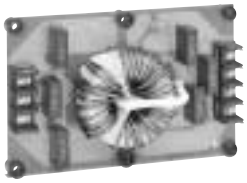

Noise Filter without Case

Noise Filter with Case

[Schaffner EMC K.K.]
Noise Filter

Connection Diagram

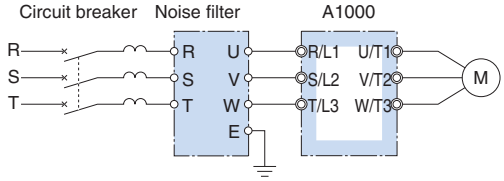

Note: Do not connect the input noise filter to the drive output terminals (U, V, W). Connect in parallel when using two filters. Only a single noise filter is required if the filter is made by Schaffner EMC K.K.

Note: Contact Yaskawa for CE compliant models (EMC directive).

200 V Class

Motor Capacity (kW)	Noise Filter without Case				Noise Filter with Case				Noise Filter by Schaffner EMC K.K.			
	Model	Code No.	Qty.	Rated Current (A)	Model	Code No.	Qty.	Rated Current (A)	Model	Code No.	Qty.	Rated Current (A)
0.4	LNFD-2103DY	FIL000132	1	10	LNFD-2103HY	FIL000140	1	10	–	–	–	–
0.75												
1.5												
2.2	LNFD-2153DY	FIL000133	1	15	LNFD-2153HY	FIL000141	1	15	–	–	–	–
3.7	LNFD-2303DY	FIL000135	1	30	LNFD-2303HY	FIL000143	1	30	–	–	–	–
5.5	LNFD-2203DY	FIL000134	2	40	LNFD-2203HY	FIL000142	2	40	FN258L-42-07	FIL001065	1	42
7.5	LNFD-2303DY	FIL000135	2	60	LNFD-2303HY	FIL000143	2	60	FN258L-55-07	FIL001066	1	55
11			3	90			3	90	FN258L-75-34	FIL001067	1	75
15									FN258L-100-35	FIL001068	1	100
18.5			4	120			4	120				
22									FN258L-130-35	FIL001069	1	130
30	–	–	–	–	–	–	–	–	FN258L-130-35	FIL001069	1	130
37									FN258L-180-07	FIL001070	1	180
45												
55									FN359P-250-99	FIL001071	1	250

400 V Class

Motor Capacity (kW)	Noise Filter without Case				Noise Filter with Case				Noise Filter by Schaffner EMC K.K.			
	Model	Code No.	Qty.	Rated Current (A)	Model	Code No.	Qty.	Rated Current (A)	Model	Code No.	Qty.	Rated Current (A)
0.4	LNFD-4053DY	FIL000144	1	5	LNFD-4053HY	FIL000149	1	5	–	–	–	–
0.75												
1.5	LNFD-4103DY	FIL000145	1	10	LNFD-4103HY	FIL000150	1	10				
2.2												
3	LNFD-4153DY	FIL000146	1	15	LNFD-4153HY	FIL000151	1	15				
3.7												
5.5	LNFD-4203DY	FIL000147	1	20	LNFD-4203HY	FIL000152	1	20				
7.5	LNFD-4303DY	FIL000148	1	30	LNFD-4303HY	FIL000153	1	30				
11	LNFD-4203DY	FIL000147	2	40	LNFD-4203HY	FIL000152	2	40	FN258L-42-07	FIL001065	1	42
15	LNFD-4303DY	FIL000148	2	60	LNFD-4303HY	FIL000153	2	60	FN258L-55-07	FIL001066	1	55
18.5												
22			3	90			3	90	FN258L-75-34	FIL001067	1	75
30												
37									FN258L-100-35	FIL001068	1	100
45			4	120			4	120	FN258L-100-35	FIL001068	1	100
55	–	–	–	–	–	–	–	–	FN258L-130-35	FIL001069	1	130
75									FN258L-180-07	FIL001070	1	180
90												

Without Case

Dimensions (mm)

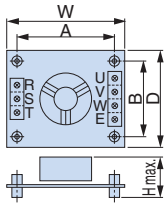

Figure 1

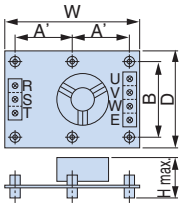

Figure 2

Terminal close-up

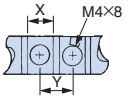

Model LNFD-□	Code No.	Figure	Dimensions (mm)							Terminal (mm)		Mounting Screw	Weight (kg)
			W	D	H	A	A'	B	M	X	Y		
2103DY	FIL000132	1	120	80	55	108	–	68	20	9	11	M4 × 4,20 mm	0.2
2153DY	FIL000133	1					68						
2203DY	FIL000134	1	170	90	70	158	78	78	20	9	11	M4 × 4,20 mm	0.4
2303DY	FIL000135	2		110		–	79	98		10	13	M4 × 6,20 mm	0.5
4053DY	FIL000144	2	170	130	75	–	79	118	30	9	11	M4 × 6,30 mm	0.3
4103DY	FIL000145	2			95								0.4
4153DY	FIL000146	2											
4203DY	FIL000147	2	200	145	100	–	94	133	30	9	11	M4 × 4,30 mm	0.5
4303DY	FIL000148	2								10	13		0.6

With Case

Dimensions (mm)

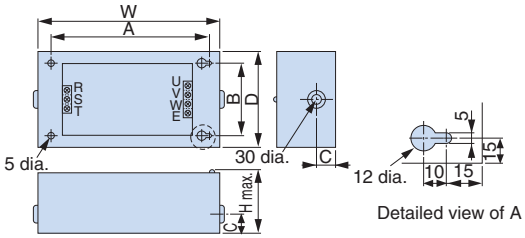

The figure shows an example of three-phase input.

Terminal close-up

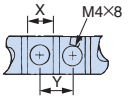

Model LNFD-□	Code No.	Dimensions (mm)						Terminal (mm)		Weight (kg)
		W	D	H	A	B	C	X	Y	
2103HY	FIL000140	185	95	85	155	65	33	9	11	0.9
2153HY	FIL000141									
2203HY	FIL000142	240	125	100	210	95	33	9	11	1.5
2303HY	FIL000143							10	13	1.6
4053HY	FIL000149	235	140	120	205	110	43	9	11	1.6
4103HY	FIL000150									1.7
4153HY	FIL000151									
4203HY	FIL000152	270	155	125	240	125	43	9	11	2.2
4303HY	FIL000153							10	13	

Manufactured by Schaffner EMC K.K.

Dimensions (mm)

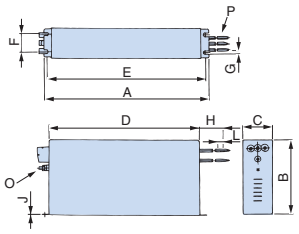

Figure 1

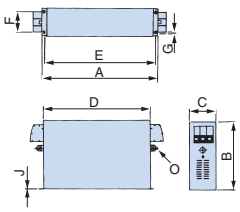

Figure 2

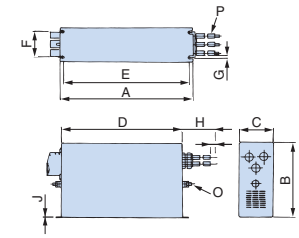

Figure 3

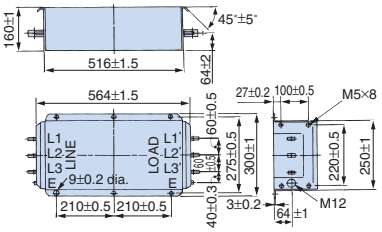

Figure 4

Model	Weight (kg)
FN359P-250-99	16
FN359P-300-99	16
FN359P-400-99	18.5
FN359P-500-99	19.5
FN359P-600-99	20.5
FN359P-900-99	33

Model	Figure	Dimensions (mm)											Wire Gauge	Weight (kg)
		A	B	C	D	E	F	G	H	J	L	O	P	
FN258L-42-07	1	329	185 ± 1	70	300	314	45	6.5	500	1.5	12	M6	AWG8	2.8
FN258L-55-07				80			55						AWG6	3.1
FN258L-75-34			220						–		–		–	4
FN258L-100-35	2	379±1.5	220	90±0.8	350±1.2	364	65	6.5	–	1.5	–	M10	–	5.5
FN258L-130-35	2	439±1.5	240	110±0.8	400±1.2	414	80			3				7.5
FN-258L-180-07	3	438±1.5				413			500	4	15		50 mm²	11
FN359P-□□□□-□□□□	4	Described in Figure 4												Shown in the above table.

Note: For CE Marking (EMC Directive) compliant models, contact us for inquiry.

Output Noise Filter

Base device selection on motor capacity.

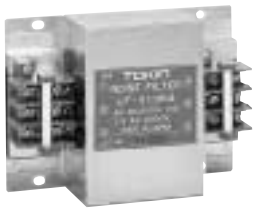

【NEC Tokin Corporation】

Connection Diagram

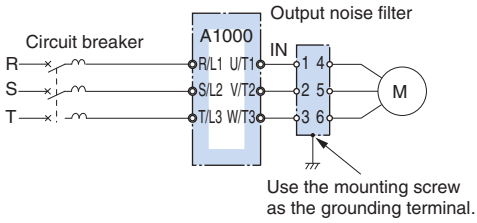

Dimensions (mm)

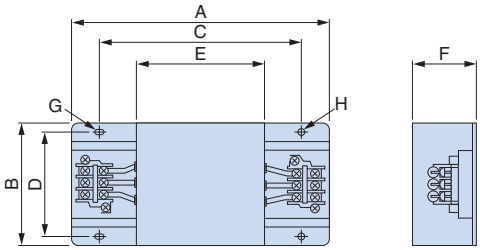

200 V Class

Motor Capacity (kW)	Model	Code No.	Qty.*1	Rated Current (A)	Dimensions (mm) A	B	C	D	E	F	G	H	Terminal	Weight (kg)
0.4	LF-310KA	FIL000068	1	10	140	100	100	90	70	45	7×φ4.5	φ4.5	TE-K5.5 M4	0.5
0.75														
1.5														
2.2	LF-320KA	FIL000069	1	20	140	100	100	90	70	45	7×φ4.5	φ4.5	TE-K5.5 M4	0.6
3.7														
5.5	LF-350KA	FIL000070	1	50	260	180	180	160	120	65	7×φ4.5	φ4.5	TE-K22 M6	2.0
7.5														
11			2	100										
15														
18.5														
22	LF-350KA*2	FIL000070	3	150	260	180	180	160	120	65	7×φ4.5	φ4.5	TE-K22 M6	2.0
	LF-3110KB*2	FIL000076	1	110	540	340	480	300	340	240	9×φ6.5	φ6.5	TE-K60 M8	19.5
30	LF-350KA*2	FIL000070	3	150	260	180	180	160	120	65	7×φ4.5	φ4.5	TE-K22 M6	2.0
	LF-375KB*2	FIL000075	2	150	540	320	480	300	340	240	9×φ6.5	φ6.5	TE-K22 M6	12.0
37	LF-3110KB	FIL000076	2	220	540	340	480	300	340	240	9×φ6.5	φ6.5	TE-K60 M8	19.5
45														
55														

*1: Connect in parallel when using more than one filter.
*2: Either noise filter model can be used.

400 V Class

Motor Capacity (kW)	Model	Code No.	Qty.*	Rated Current (A)	Dimensions (mm) A	B	C	D	E	F	G	H	Terminal	Weight (kg)
0.4	LF-310KB	FIL000071	1	10	140	100	100	90	70	45	7×φ4.5	φ4.5	TE-K5.5 M4	0.5
0.75														
1.5														
2.2														
3														
3.7														
5.5	LF-320KB	FIL000072	1	20	140	100	100	90	70	45	7×φ4.5	φ4.5	TE-K5.5 M4	0.6
7.5														
11	LF-335KB	FIL000073		35										0.8
15														
18.5	LF-345KB	FIL000074	1	45	260	180	180	160	120	65	7×φ4.5	φ4.5	TE-K22 M6	2.0
22	LF-375KB	FIL000075	1	75	540	320	480	300	340	240	9×φ6.5	φ6.5	TE-K22 M6	12.0
30														
37	LF-3110KB	FIL000076	1	110	540	340	480	300	340	240	9×φ6.5	φ6.5	TE-K60 M8	19.5
45														
55	LF-375KB	FIL000075	2	150	540	320	480	300	340	240	9×φ6.5	φ6.5	TE-K22 M6	12.0
75	LF-3110KB	FIL000076	2	220	540	340	480	300	340	240	9×φ6.5	φ6.5	TE-K60 M8	19.5
90														

* Connect in parallel when using more than one filter.

24 V Power Supply

The 24 V Power Supply Option maintains drive control circuit power in the event of a main power outage. The control circuit keeps the network communications and I/O data operational in the event of a power outage. It supplies external power to the control circuit only.

Note: Parameter settings cannot be changed when the drive is operating solely from this power supply.

The installed option adds 50 mm to the total depth of the drive.

Connection Diagram

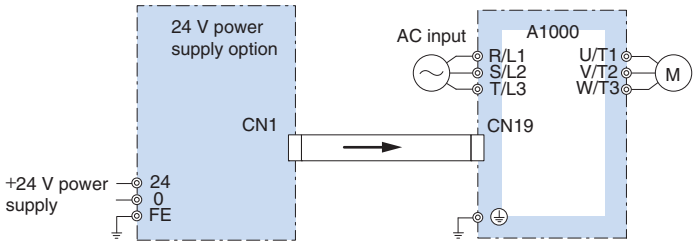

Model	Code No.
200 V Class: PS-A10L	PS-A10L
400 V Class: PS-A10H	PS-A10H

Momentary Power Loss Recovery Unit

Connection Diagram

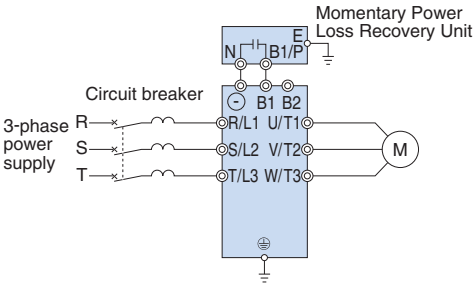

Dimensions (mm)

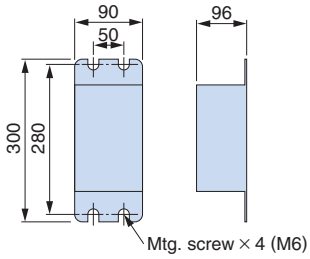

Model	Code No.
200 V Class: P0010	P0010
400 V Class: P0020	P0020

Note: Functions as a back-up power supply for drives up to 11 kW. Allows the drive to ride through a power loss up to 2 s long. The drive alone can continue running through a power loss lasting 0.1 s to 1.0 s. Results may vary with drive capacity.

Braking Unit, Braking Resistor, Braking Resistor Unit

Braking units come standard with 200 V and 400 V class drives 0.4 to 30 kW. If the application requires a braking resistor or braking unit, choose from built-in and stand-alone types in accordance with motor capacity.

Braking Unit
【CDBR series】

Braking Resistor
【ERF-150WJ series】

Braking Resistor Unit (stand-alone)
【LKEB series】

200 V Class

Max. Applicable Motor (kW)	ND/HD	A1000 Model CIMR-AA2A ⬚⬚⬚⬚	Braking Unit Model CDBR- ⬚⬚⬚⬚	Braking Unit Qty.	Braking Resistor (Duty Factor: 3% ED, 10 s max.)*1 Model ERF-150WJ ⬚⬚⬚⬚	Resistance (Ω)	Qty.	Diagram	Braking Torque*3 (%)	Braking Resistor Unit (Duty Factor: 10% ED, 10 s max.)*1 Model LKEB- ⬚⬚⬚⬚	Resistor Specifications (per unit)	Qty.	Diagram	Braking Torque*3 (%)	Min.*2 Connectable Resistance (Ω)
0.4	HD	0004	Built-in		201	200	1	A	220	20P7	70 W 200 Ω	1	B	220	48
0.75	ND	0004			201	200	1	A	125	20P7	70 W 200 Ω	1	B	125	48
	HD	0006													
1.1	ND	0006			201	200	1	A	85	20P7	70 W 200 Ω	1	B	85	48
	HD	0008			101	100			150	21P5	260 W 100 Ω			150	
1.5	ND	0008			101	100	1	A	125	21P5	260 W 100 Ω	1	B	125	48
	HD	0010													
2.2	ND	0010			700	70	1	A	120	22P2	260 W 70 Ω	1	B	120	48
	HD	0012													16
3	ND	0012			620	62	1	A	100	22P2	390 W 40 Ω	1	B	150	16
	HD	0018													
3.7	ND	0018			620	62	1	A	80	23P7	390 W 40 Ω	1	B	125	16
	HD	0021													
5.5	ND	0021			620	62	2	A	110	25P5	520 W 30 Ω	1	B	115	16
	HD	0030			–	–	–	–	–						
7.5	ND	0030			–	–	–	–	–	27P5	780 W 20 Ω	1	B	125	16
	HD	0040			–	–	–	–	–						9.6
11	ND	0040			–	–	–	–	–	2011	2400 W 13.6 Ω	1	B	125	9.6
	HD	0056			–	–	–	–	–						
15	ND	0056			–	–	–	–	–	2015	3000 W 10 Ω	1	B	125	9.6
	HD	0069			–	–	–	–	–						
18.5	ND	0069			–	–	–	–	–	2015	3000 W 10 Ω	1	B	100	9.6
	HD	0081			–	–	–	–	–						
22	ND	0081			–	–	–	–	–	2015	3000 W 10 Ω	1	B	85	9.6
	HD	0110			–	–	–	–	–	2022	4800W 6.8 Ω			125	6.4
30	ND	0110			–	–	–	–	–	2022	4800 W 6.8 Ω	1	B	90	6.4
	HD	0138			–	–	–	–	–						
37	ND	0138			–	–	–	–	–	2022	4800 W 6.8 Ω	1	B	70	6.4
	HD	0169	2015B	2	–	–	–	–	–	2015	3000 W 10 Ω	2	D	100	9.6
45	ND	0169	2022B	2	–	–	–	–	–	2015	3000 W 10 Ω	2	D	80	9.6
	HD	0211	2022B	2	–	–	–	–	–	2022	4800 W 6.8 Ω			120	6.4
55	ND	0211	2022B	2	–	–	–	–	–	2022	4800 W 6.8 Ω	2	D	100	6.4

*1 : Refers to a motor coasting to stop with a constant torque load. Constant output and regenerative braking will reduce the duty factor.
*2 : Assumes the use of a single braking unit. The braking unit should have a resistance higher than the minimum connectable resistance value and be able to generate enough braking torque to stop the motor.
*3 : Applications with a relatively large amount of regenerative power (elevators, hoists, etc.) may require more braking power than is possible with only the standard braking unit and braking resistor. Contact Yaskawa for information if braking torque exceeds the value shown.
Note: 1. Braking resistor ERF-150WJ requires a separate attachment for installation. Contact Yaskawa for details.
2. See the connection diagram on page 48.

400 V Class

Max. Applicable Motor (kW)	ND/HD	A1000 Model CIMR-AA4A □□□□	Braking Unit Model CDBR- □□□□	Braking Unit Qty.	Braking Resistor (Duty Factor: 3% ED, 10 s max.)*1 Model ERF-150WJ □□□□	Resistance (Ω)	Qty.	Diagram	Braking Torque*3 (%)	Braking Resistor Unit (Duty Factor: 10% ED, 10 s max.)*1 Model LKEB- □□□□	Resistor Specifications (per unit)	Qty.	Diagram	Braking Torque*3 (%)	Min.*2 Connectable Resistance (Ω)
0.4	HD	0002	Built-in		751	750	1	A	230	40P7	70 W 750 Ω	1	B	230	96
0.75	ND	0002			751	750	1	A	130	40P7	70 W 750 Ω	1	B	130	96
	HD	0004													
1.5	ND	0004			401	400	1	A	125	41P5	260 W 400 Ω	1	B	125	96
	HD	0005													64
2.2	ND	0005			301	300	1	A	115	42P2	260 W 250 Ω	1	B	135	64
	HD	0007													
3	ND	0007			201	200	1	A	125	42P2	260 W 250 Ω	1	B	100	64
	HD	0009								43P7	390 W 150 Ω			150	32
3.7	ND	0009			201	200	1	A	105	43P7	390W 150 Ω	1	B	135	32
	HD	0011													
5.5	ND	0011			201	200	2	A	135	45P5	520 W 100 Ω	1	B	135	32
	HD	0018			–	–	–	–	–						
7.5	ND	0018			–	–	–	–	–	47P5	780 W 75 Ω	1	B	130	32
	HD	0023			–	–	–	–	–						
11	ND	0023			–	–	–	–	–	4011	1040 W 50 Ω	1	B	135	32
	HD	0031			–	–	–	–	–						20
15	ND	0031			–	–	–	–	–	4015	1560 W 40 Ω	1	B	125	20
	HD	0038			–	–	–	–	–						
18.5	ND	0038			–	–	–	–	–	4018	4800 W 32 Ω	1	B	125	20
	HD	0044			–	–	–	–	–						19.2
22	ND	0044			–	–	–	–	–	4022	4800 W 27.2 Ω	1	B	125	19.2
	HD	0058			–	–	–	–	–						
30	ND	0058			–	–	–	–	–	4030	6000 W 20 Ω	1	B	125	19.2
	HD	0072			–	–	–	–	–						
37	ND	0072			–	–	–	–	–	4030	6000 W 20 Ω	1	B	100	19.2
	HD	0088	4045B	1	–	–	–	–	–	4037	9600 W 16 Ω		C	125	12.8
45	ND	0088	4045B	1	–	–	–	–	–	4045	9600 W 13.6 Ω	1	C	125	12.8
	HD	0103			–	–	–	–	–						
55	ND	0103	4045B	1	–	–	–	–	–	4045	9600 W 13.6 Ω	1	C	100	12.8
	HD	0139	4030B	2	–	–	–	–	–	4030	6000 W 20 Ω	2	D	135	19.2
75	ND	0139	4030B	2	–	–	–	–	–	4030	6000 W 20 Ω	2	D	100	19.2
	HD	0165	4045B		–	–	–	–	–	4045	9600 W 13.6 Ω			145	12.8
90	ND	0165	4045B	2	–	–	–	–	–	4045	9600 W 13.6 Ω	2	D	120	12.8

*1 : Refers to a motor coasting to stop with a constant torque load. Constant output and regenerative braking will reduce the duty factor.
*2 : Assumes the use of a single braking unit. The braking unit should have a resistance higher than the minimum connectable resistance value and be able to generate enough braking torque to stop the motor.
*3 : Applications with a relatively large amount of regenerative power (elevators, hoists, etc.) may require more braking power than is possible with only the standard braking unit and braking resistor. Contact Yaskawa for information if braking torque exceeds the value shown.
Note: 1. Braking resistor ERF-150WJ requires a separate attachment for installation. Contact Yaskawa for details.
2. See the connection diagram on page 48.

Connection Diagram

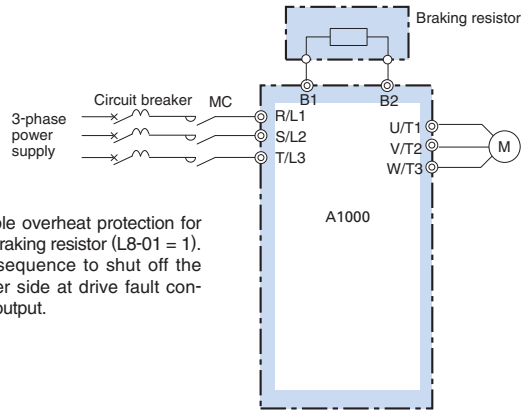

· Enable overheat protection for the braking resistor (L8-01 = 1).
· Set sequence to shut off the power side at drive fault contact output.

Connection Diagram A

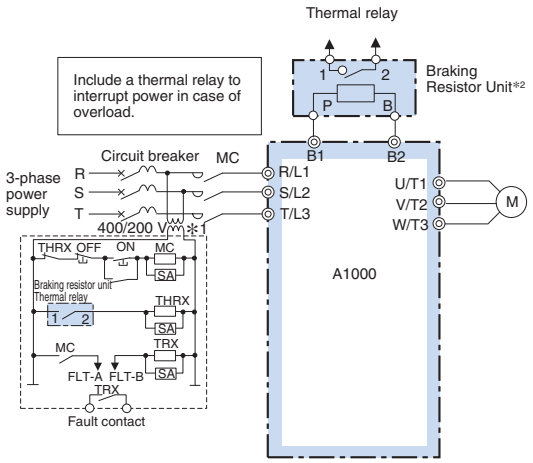

Connection Diagram B

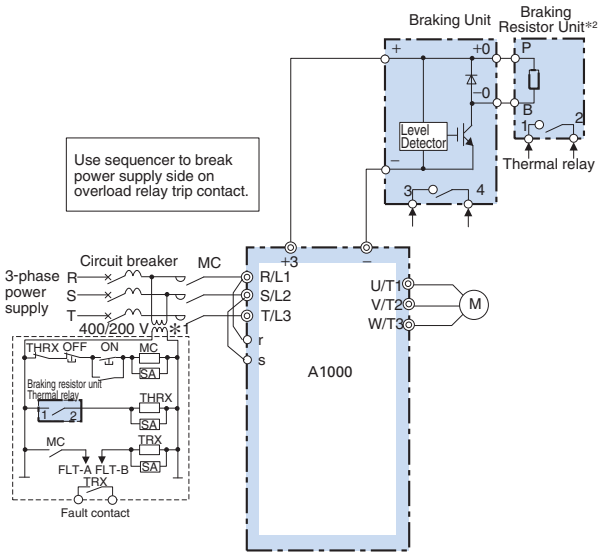

Connection Diagram C

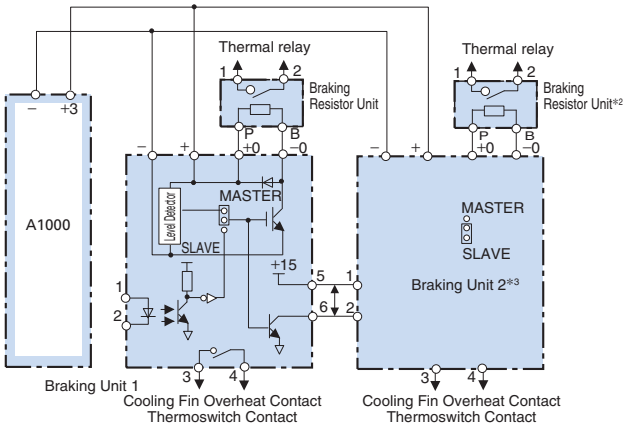

Connection Diagram D

*1: 200 V class drives do not require a control circuit transformer.
*2: Disable Stall Prevention during deceleration by setting L3-04 to 0 when using a Braking Resistor Unit. The motor may not stop within the deceleration time if this setting is not changed.
*3: When using more than one braking unit connected in parallel, set one of the braking units to be the master, and the others to be slaves.
Note: When connecting a separately-installed type braking resistor unit (model CDBR) to drives with a built-in braking transistor (200 V/400 V 30 kW or less), connect the B1 terminal of the drive to the positive terminal of the braking resistor unit and connect the negative terminal of the drive to the negative terminal of the braking resistor unit. The B2 terminal is not used in this case.

Dimensions (mm)
Braking Unit

Model: CDBR-2015B , -2022B, -4030B, -4045B

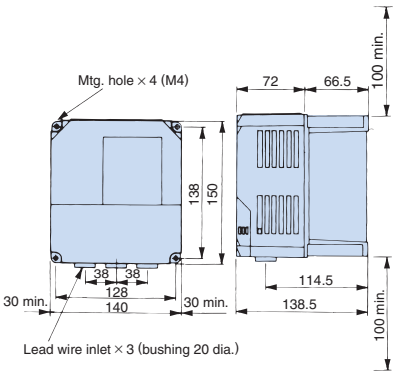

Weight: 1.8 kg

Model: CDBR-2110B

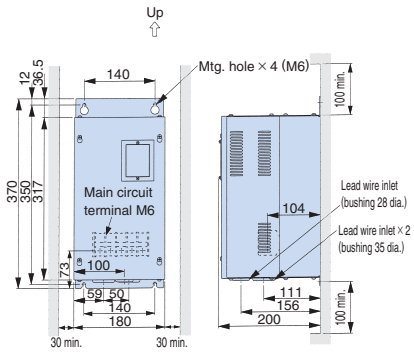

Weight: 8.5 kg

Model: CDBR-4220B

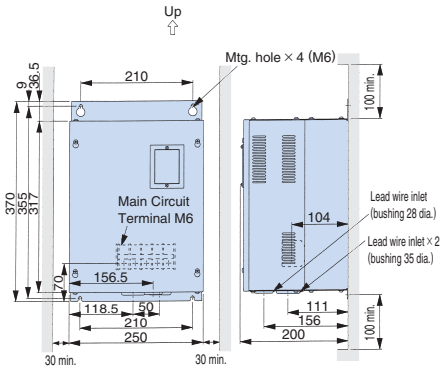

Weight: 12 kg

Model CDBR-□	Heat Loss (W)
2015B	32
2022B	38
2110B	64
4030B	54
4045B	59
4220B	71

Braking Resistor

A separate attachment is need. Contact Yaskawa for details.

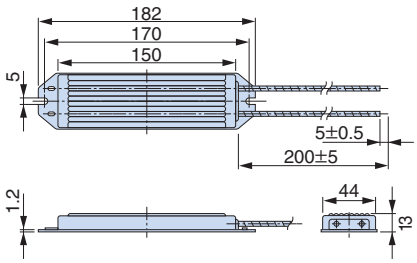

Weight: 0.2 kg
(All ERF-150WJ□ series models)

Braking Resistor Unit (stand-alone)

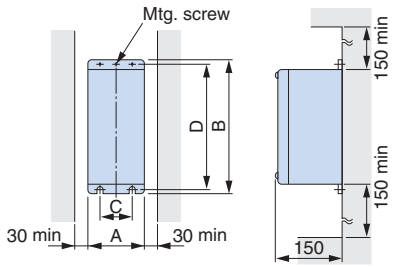

Figure 1

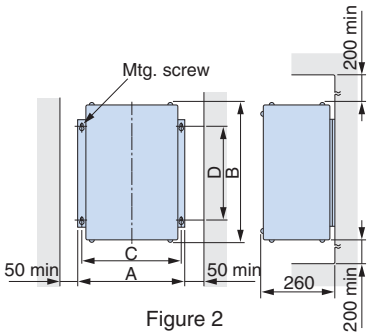

Figure 2

Applicable Voltage Class	Braking Resistor Unit Model LKEB-□□□□□□	Figure	Dimensions (mm) A	B	C	D	MTG Screw	Weight (kg)	Allowable Average Power Consumption (W)
200 V Class	20P7	1	105	275	50	260	M5×3	3.0	30
	21P5	1	130	350	75	335	M5×4	4.5	60
	22P2							4.5	89
	23P7							5.0	150
	25P5	1	250	350	200	335	M6×4	7.5	220
	27P5							8.5	300
	2011	2	266	543	246	340	M8×4	10	440
	2015		356		336			15	600
	2018		446		426			19	740
	2022							19	880

Applicable Voltage Class	Braking Resistor Unit Model LKEB-□□□□□□	Figure	Dimensions (mm) A	B	C	D	MTG Screw	Weight (kg)	Allowable Average Power Consumption (W)
400 V Class	40P7	1	105	275	50	260	M5×3	3.0	30
	41P5	1	130	350	75	335	M5×4	4.5	60
	42P2							4.5	89
	43P7							5.0	150
	45P5	1	250	350	200	335	M6×4	7.5	220
	47P5							8.5	300
	4011	2	350	412	330	325	M6×4	16	440
	4015							18	600
	4018	2	446	543	426	340	M8×4	19	740
	4022							19	880
	4030	2	356	956	336	740	M8×4	25	1200
	4037		446		426			33	1500
	4045							33	1800

VS System Module (Power Supply Capacity 6 VA or less)

Name (Model)	Exterior	Function
Soft Starter A (JGSM-01) Soft Starter B (JGSM-02)		Provides smooth changes in speed during start, stop, and when sudden changes in the speed reference would otherwise impact the load. Independent accel/decel settings, an output signal during speed changes, and fast stopping features are included. Capable of detecting zero speed and motor direction. Acceleration and deceleration time setting ranges: Soft Starter A: 1.5 to 30 s Soft Starter B: 5 to 90 s
Ratio Setter A (JGSM-03)		Converts the current signal 4 to 20 mA of master setter JVOP-03*1 to a voltage signal. Sets five types of ratios and biases.
Ratio Setter B (JGSM-04)		Converts the frequency signal 0 to 2 kHz of master setter JVOP-04*1 to a voltage signal. Sets five types of ratios and biases.
Ratio Setter C (JGSM-17)		Converts a 200 Vac signal, a 30 Vac tachgenerator signal, or a 10 Vdc signal to DC for use as the speed reference. Allows the user to set up to five ratios and biases.
Follower Ratio Setter (JGSM-05)		Converts a frequency signal from a tachgenerator for voltage input. Allows the user to set up to five ratios and biases.
Position Controller (JGSM-06)		Converts a self-synchronizing signal from YVGC-500W*1, then converts that signal to DC voltage proportional to the rotational angle. Equipped with a signal mixing function to minimize deviation from the reference signal.
PID Controller (JGSM-07)		Independently sets ratio gain, integral, and differential time for the simple process control. Integral reset, stepless operation, and wind-up functions are available.
Preamplifier (JGSM-09-□□)*2		Amplifies both the power of DC input signal and output of snap-in function modules JZSP-11 to 16*1.
UP/DOWN Setter (JGSM-10B)		Executes "UP" or "DOWN" command from remote control type VS operator model JVOP-10*1 by lowering or raising reference voltage.
Operational Amplifier (JGSM-12-□□)*3		Required operational circuits are provided through a range of operational impedances.
Signal Selector A (JGSM-13)		Consists of power supply circuit and two relay circuits. Used as a selector circuit of control signals.

Name (Model)	Appearance	Function
Signal Selector B (JGSM-14)		Contains three relay circuits to switch between control signals. Must be using in combination with JGSM-13, which supplies power.
Comparator (JGSM-15-□□)*2		Detects signal levels for DC voltage, current, AC tachogenerator, or frequency reference and compares them with two preset levels. The snap-in module*1 is used to drive relays and output contact signals.
V/I Converter (JGSM-16-□□)*2		Converts DC voltage into a 4 to 20 mA current signal for use with other monitoring devices. A snap-in module*1 can also be added to monitor frequency or provide feedback for a tachogenerator.
D/A Converter (JGSM-18) (JGSM-19)		Converts BCD 3-digit or 12-bit binary digital signals to analog signals of −10 to +10 V with high accuracy. Model JGSM-18: For BCD 3-digit input signals Model JGSM-19: For 12-bit binary signals
Static Potentiometer (JGSM-21 D/A Converter) (JGSM-22 Controller)		Static potentiometer can be used in combination with remote setting device JGSM-10B for the following applications: · Maintain reference values despite power loss · Set deceleration times externally · Operate as a soft-starter for an analog signal JGSM-21 and JGSM-22 must be used in combination with one another.

*1: Offered as a standard Yaskawa product.
*2: □□ shows model number of VS snap-in function modules. Refer to the VS Snap-in Module list for more information.
*3: □□ indicates impedance class.
Note: Both 200 V/220 V at 50 Hz/60 Hz are available as standard models. Use a transformer for other power supplies with a capacity of 6 VA or less.

VS System Module Dimensions (mm)

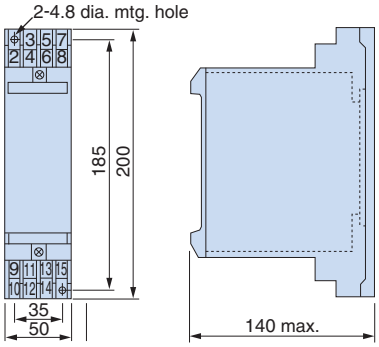

VS Snap-in Module List

Application	Name	Model
Short-Circuit of Mounting Connector of VS Snap-in Module	Short-circuit PC board	JZSP-00
Buffer Accel/Decel Operation	Soft starter	JZSP-12
Operation by Signal of Either Process Adjusting Meter or VS Operator JVOP-03.	I/V converter	JZSP-13
Operation by Signal of VS Operator JVOP-04	f/V converter	JZSP-14
Sequence Operation with Main Unit	Tachogenerator follower	JZSP-15
Signal Amplification or Reduction	Signal mixer	JZSP-16□□
		JZSP-16-01
		JZSP-16-02
		JZSP-16-03

LCD Operator/LCD Operator Extension Cable

For easier operation when using the optional LCD operator. Enables remote operation. Includes a copy function for saving drive settings.

Connection

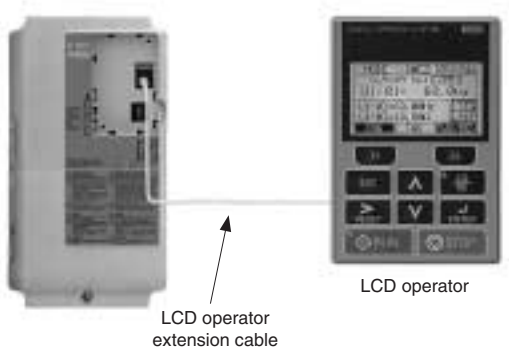

Dimensions (mm)

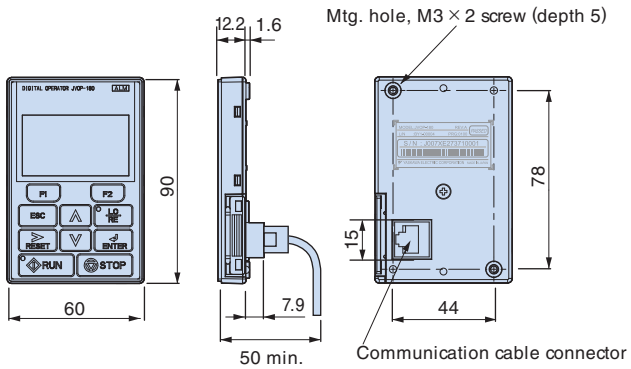

LCD Operator

Model	Code No.
JVOP – 180	100-041-022

LCD Operator Extension Cable

Model	Code No.
WV001 (1 m)	WV001
WV003 (3 m)	WV003

To install the LCD operator on the door of the enclosure panel, the following tools are required:

Item	Model	Code No.	Installation	Notes
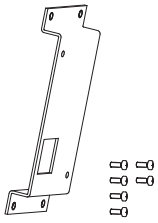 Installation Support Set A	EZZ020642	100-039-992	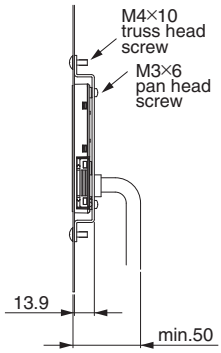	For use with holes through the panel
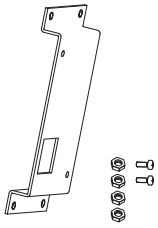 Installation Support Set B	EZZ020642	100-039-993	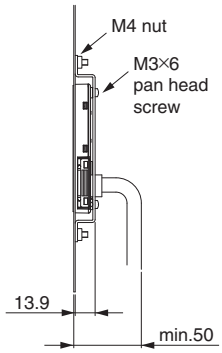	For use with panel mounted threaded studs Note: If weld studs are on the back of the panel, use the Installation Support Set B.

USB Copy Unit (Model: JVOP-181)

Connection

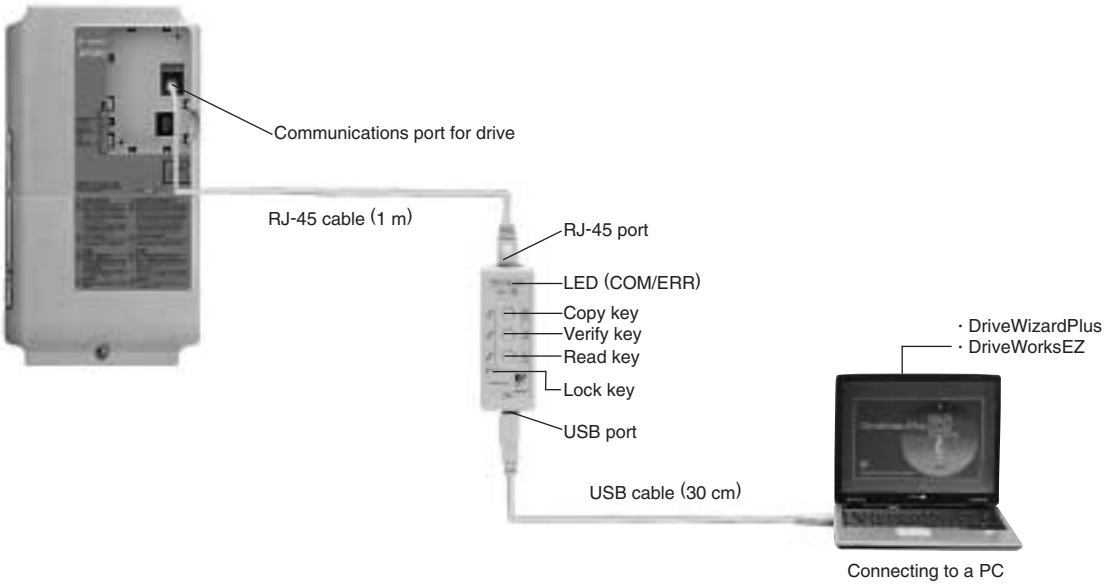

Model	Code No.
JVOP-181	100-038-281

Note: JVOP-181 is a set consisting of a USB copy unit, RJ-45 cable, and USB cable.

Specifications

Item	Specifications
Port	LAN (RJ-45)
	USB (Ver.2.0 compatible)
Power Supply	Supplied from a PC or the drive
Operating System	Windows2000/XP
Memory	Memorizes the parameters for one drive.
Dimensions	30 (W) × 80 (H) × 20 (D) mm
Accessories	RJ-45 Cable(1 m), USB Cable(30 cm)

Note: 1. Drives must have identical software versions to copy parameters settings.
2. Requires a USB driver.
3. Parameter copy function disabled when connected to a PC.

Frequency Meter/Current Meter

Model	Code No.
Scale-75 Hz full-scale: DCF-6A	FM000065
Scale-60/120 Hz full-scale: DCF-6A	FM000085
Scale-5 A full-scale: DCF-6A	DCF-6A-5A
Scale-10 A full-scale: DCF-6A	DCF-6A-10A
Scale-20 A full-scale: DCF-6A	DCF-6A-20A
Scale-30 A full-scale: DCF-6A	DCF-6A-30A
Scale-50 A full-scale: DCF-6A	DCF-6A-50A

Note: DCF-6A specifications are 3 V, 1 mA, and 3 kΩ inner impedance. Because the A1000 multi-function analog monitor output default setting is 0 to 10 V, set frequency meter adjusting potentiometer (20 kΩ) or parameter H4-02 (analog monitor output gain) within the range of 0 to 3 V.

Dimensions (mm)

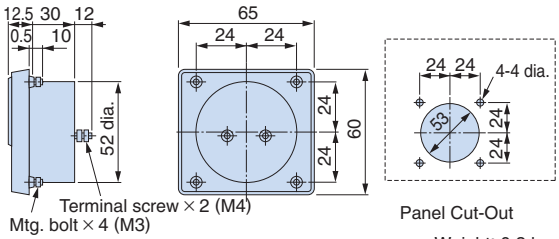

Weight: 0.3 kg

Variable Resistor Board (installed to drive terminals)

Model	Code No.
Frequency reference 2 kΩ	ETX003270
Meter scale 20 kΩ	ETX003120

Dimensions (mm)

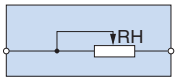

Weight: 20 g

Frequency Setting Potentiometer/Frequency Meter Adjusting Potentiometer

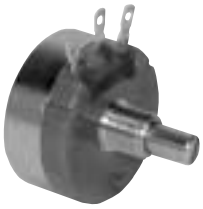

Model	Code No.
RV30YN20S 2 kΩ	RH000739
RV30YN20S 20 kΩ	FM000850

Dimensions (mm)

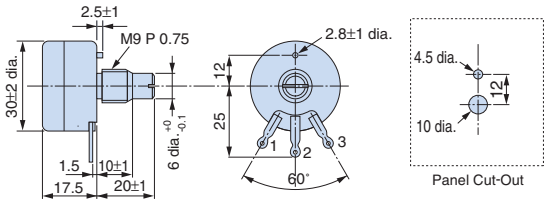

Weight: 0.2 kg

Control Dial for Frequency Setting Potentiometer/Frequency Meter Adjusting Potentiometer

Model	Code No.
CM-3S	HLNZ-0036

Dimensions (mm)

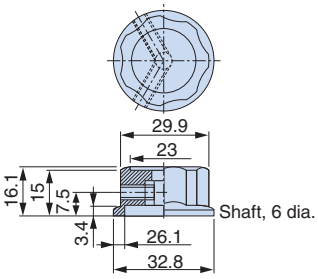

Meter Plate for Frequency Setting Potentiometer/Frequency Meter Adjusting Potentiometer

Model	Code No.
NPJT41561-1	NPJT41561-1

Dimensions (mm)

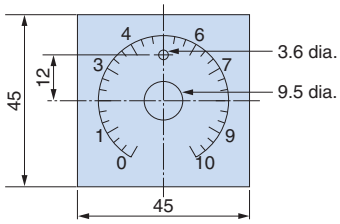

Output Voltage Meter

Model	Code No.
Scale-300 V full-scale (Rectification Type Class 2.5) : SCF-12NH	VM000481
Scale-600 V full-scale (Rectification Type Class 2.5) : SCF-12NH	VM000502

Dimensions (mm)

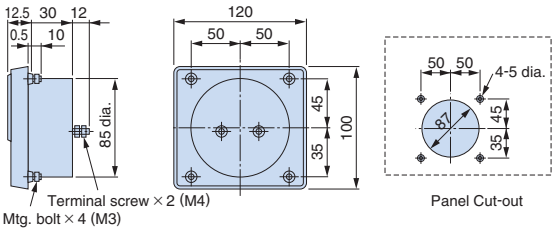

Weight: 0.3 kg

Potential Transformer

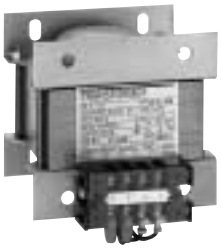

Model	Code No.
600 V Transformer for Instrument : UPN-15B 400 V/100 V	PT000084

Note: For use with a standard voltage regulator.
A standard voltage regulator may not match the drive output voltage. Select a regulator specifically designed for the drive output (PT000084), or a voltmeter that does not use a transformer and offers direct read out.

Dimensions (mm)

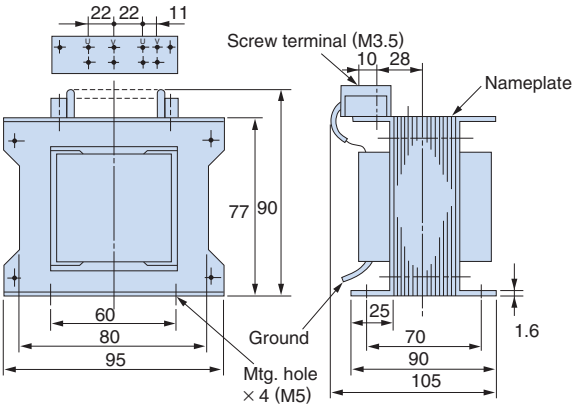

Weight: 2.3 kg

Application Notes

Selection

■ Installing a Reactor

An AC or DC reactor can be used for the following situations:

· when the power supply is 600 kVA or more.

· to smooth peak current that results from switching a phase advance capacitor.

· to improve the power supply power factor.

A DC reactor comes standard with 200 V and 400 V class models with a capacity of 22 kW or more.

Be sure to use an AC reactor when the drive is using a power supply system with a thyristor converter.

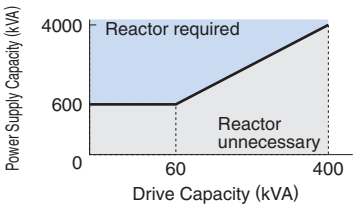

■ Drive Capacity

When running a specialized motor or more than one motor in parallel from a single drive, the capacity of the drive should be larger than 1.1 times of the total motor rated current.

■ Starting Torque

The overload rating for the drive determines the starting and accelerating characteristics of the motor. Expect lower torque than when running from line power. To get more starting torque, use a larger drive or increase both the motor and drive capacity.

■ Emergency Stop

When the drive faults out, a protective circuit is activated and drive output is shut off. This, however, does not stop the motor immediately. Some type of mechanical brake may be needed if it is necessary to halt the motor faster than the Fast Stop function is able to.

■ Options

The B1, B2, +1, and +2 terminals are used to connect optional devices. Connect only A1000-compatible devices.

■ Repetitive Starting/Stopping

Cranes (hoists), elevators, punching presses, and other such applications with frequent starts and stops often exceed 150% of their rated current values. Heat stress generated from repetitive high current can shorten the lifespan of the IGBTs. The expected lifespan for the IGBTs is about 8 million start and stop cycles with a 4 kHz carrier frequency and a 150% peak current.

Yaskawa recommends lowering the carrier frequency, particularly when audible noise is not a concern. The user can also choose to reduce the load, increase the acceleration and deceleration times, or switch to a larger drive. This will help keep peak current levels under 150%. Be sure to check the peak current levels when starting and stopping repeatedly during the initial test run, and make adjustments accordingly.

For cranes and other applications using the inching function in which the drives starts and stops the motor repeatedly, Yaskawa recommends the following steps to ensure torque levels:

· Select a large enough drive so that peak current levels remain below 150%.

· The drive should be one frame size larger than the motor.

Installation

■ Enclosure Panels

Keep the drive in a clean environment by either selecting an area free of airborne dust, lint, and oil mist, or install the drive in an enclosure panel. Leave the required space between the drives to provide for cooling, and take steps to ensure that the ambient temperature remains within allowable limits. Keep flammable materials away from the drive. If the drive must be used in an area where it is subjected to oil mist and excessive vibration, protective designs are available. Contact Yaskawa for details.

■ Installation Direction

The drive should be installed upright as specified in the manual.

Settings

■ Use V/f Control when running multiple induction motors at the same time.

■ If using Open Loop Vector Control designed for permanent magnet motors, make sure that the proper motor code has been set to parameter E5-01 before performing a trial run.

■ Upper Limits

Because the drive is capable of running the motor at up to 400 Hz, be sure to set the upper limit for the frequency to control the maximum speed. The default setting for the maximum output frequency is 60 Hz.

■ DC Injection Braking

Motor overheat can result if there is too much current used during DC Injection Braking, or if the time for DC Injection Braking is too long.

■ Acceleration/Deceleration Times

Acceleration and deceleration times are affected by how much torque the motor generates, the load torque, and the inertia moment ($GD^2/4$). Set a longer accel/decel time when Stall Prevention is enabled. The accel/decel times are lengthened for as long as the Stall Prevention function is operating. For faster acceleration and deceleration, increase the capacity of the drive.

Compliance with Harmonic Suppression Guidelines

A1000 conforms to strict guidelines in Japan covering harmonic suppression for power conversion devices. Defined in JEM-TR201 and JEM-TR226 and published by the Japan Electrical Manufacturers' Association, these guidelines define the amount of harmonic current output acceptable for new installation. Refer to JEM-TR226 for more information on Japanese standards for harmonic suppression for power convertors.

General Handling

■ Wiring Check

Never connect the power supply lines to output terminals U/T1, V/T2, or W/T3. Doing so will destroy the drive. Be sure to perform a final check of all sequence wiring and other connections before turning the power on. Make sure there are no short circuits on the control terminals (+V, AC, etc.), as this could damage the drive.

■ Magnetic Contactor Installation

Avoid switching a magnetic contactor on the power supply side more frequently than once every 30 minutes. Frequent switching can cause damage to the drive.

■ Inspection and Maintenance

Capacitors in the drive take time to discharge even after the power has been shut off. To prevent shock, wait until the charge LED has gone out before attempting any maintenance on the drive.

The heatsink can become quite hot during operation, and proper precautions should be taken to prevent burns. When replacing the cooling fan, shut off the power and wait at least 15 minutes to be sure that the heatsink has cooled down.

■ Wiring

Make sure to use ring tongue solderless terminals when wiring UL/cUL-certified drives. Use the tools recommended by the terminal manufacturer for caulking.

■ Transporting the Drive

Never steam clean the drive.

During transport, keep the drive from coming into contact with salts, fluorine, bromine and other such harmful chemicals.

Peripheral Devices

■ Installing an MCCB

Install an MCCB to the power supply side of the drive to protect internal circuitry. The type of MCCB needed depends on the power supply power factor (power supply voltage, output frequency, load characteristics, etc.).

Sometimes a fairly large MCCB may be required due to the affects of harmonic current on operating characteristics. Use a leakage breaker with harmonic suppression capability that has been designed specifically for operation with an AC drive. The rated current of the leakage breaker must be 30 mA or higher per drive unit. If a leakage breaker faults out without reducing harmonic current, then reduce the carrier frequency of the drive, replace it with a breaker that has better harmonic suppression capabilities, or provide a leakage breaker with at least a 200 mA current rating to each drive unit.

■ Magnetic Contactor for Input Power

Even though an MC is designed to switch following a momentary power loss, frequent MC use can damage other components. Avoid switching the MC more than once every 30 minutes. The MC will not be activated after a momentary power loss if using the operator keypad to run the drive. This is because the drive is unable to restart automatically when set for LOCAL. Although the drive can be stopped by using an MC installed on the power supply side, the drive cannot stop the motor in a controlled fashion, and it will simply coast to stop. If a braking resistor or dynamic braking unit has been installed, be sure to set up a sequence that opens the MC with a thermal protector switch connected to the braking resistor device.

■ Magnetic Contactor for Motor

As a general principle, the user should avoid opening and closing the magnetic contactor between the motor and the drive during run. Doing so can cause high peak currents and overcurrent faults. If magnetic contactors are used to bypass the drive by connecting the motor to the power supply directly, make sure to close the bypass only after the drive is stopped and fully disconnected from the motor. The Speed Search function can be used to start a coasting motor.

Use an MC with delayed release if momentary power loss is a concern.

■ Motor Thermal Over Load Relay Installation

The drive comes with built in electrothermal protection to prevent damage from overheat. If running several motors from the same drive or if using a multi-pole motor, a thermal relay (THR) should be connected between the drive and each motor. Disable the motor protection selection parameter (L1-01 = 0), and set the thermal relay or thermal protection value in accordance with the data listed on the motor nameplate when running at 50 Hz, and 1.1 times the value listed on the motor nameplate when running at 60 Hz.

■ Improving the Power Factor

Installing a DC or AC reactor to the input side of the drive can help improve the power factor.

Refrain from using a capacitor or surge absorber on the output side as a way of improving the power factor, because harmonic contents on the output side can lead to damage from overheat. This can also lead to problems with overcurrent.

■ Radio Frequency Interference

Drive output contains harmonic contents that can affect the performance of surrounding electronic instruments such as an AM radio. These problems can be prevented by installing a noise filter, as well as by using a properly grounded metal conduit to separate wiring between the drive and motor.

■ Wire Gauges and Wiring Distance

Motor torque can suffer as a result of voltage loss across a long cable running between the drive and motor, especially when there is low frequency output. Make sure that a large enough wire gauge is used.

The optional LCD operator requires a proprietary cable to connect to the drive. If an analog signal is used to operate the drive via the input terminals, make sure that the wire between the analog operator and the drive is no longer than 50 m, and that it is properly separated from the main circuit wiring. Use reinforced circuitry (main circuit and relay sequence circuitry) to prevent inductance from surrounding devices. To run the drive with a frequency potentiometer via the external terminals, use twisted shielded pair cables and ground the shield.

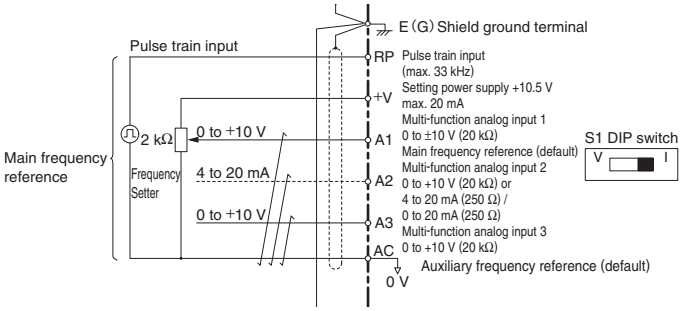

■ Counteracting Noise

Because A1000 is designed with PWM control, a low carrier frequency tends to create more motor flux noise than using a higher carrier frequency. Keep the following points in mind when considering how to reduce motor noise:

- Lowering the carrier frequency minimizes the effects of noise.
- A line noise filter can reduce the affects on AM radio frequencies and poor sensor performance. See "Options and Peripheral Devices" on page 24.
- Make sure the distance between signal and power lines is at least 10 cm (up to 30 cm is preferable), and use twisted pair cable to prevent induction noise from the drive power lines.

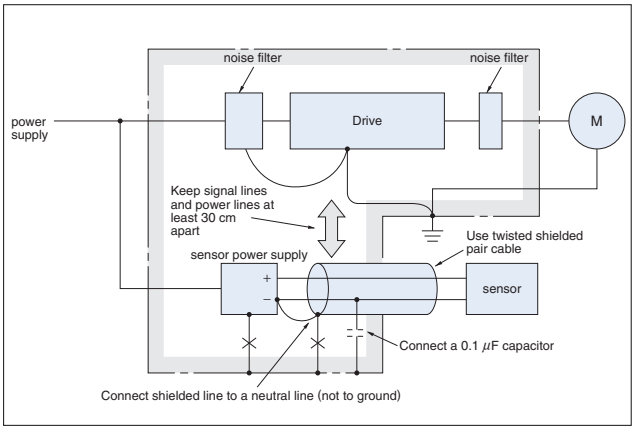

<Provided by JEMA>

■ Leakage Current

Harmonic leakage current passes through stray capacitance that exists between the power lines to the drive, ground, and the motor lines. Consider using the following peripheral devices to prevent problems with leakage current.

	Problem	Solution
Ground Leakage Current	MCCB is mistakenly triggered	· Lower the carrier frequency set to parameter C6-02. · Try using a component designed to minimize harmonic distortion for the MCCB such as the NV series by Mitsubishi.
Current Leakage Between Lines	Thermal relay connected to the external terminals is mistakenly triggered by harmonics in the leakage current	· Lower the carrier frequency set to parameter C6-02. · Use the drive's built-in thermal motor protection function.

Setting the Carrier Frequency Relative to Wiring Distance

Wiring Distance	50 m or less	100 m or less	100 m or more
C6-02: Carrier Frequency Selection	1 to A (15 kHz or less)	1, 2, 7 to A (5 kHz or less)	1, 7 to A (2 kHz or less)

When a single drive is used to run multiple motors, the length of the motor cable should be calculated as the total distance between the drive and each motor.

A lower carrier should be used if the cable running between the motor and drive is relatively long when using Open Loop Vector for induction motors or PM motors, preferably as low as 2 kHz. If the motor cable is longer than 100 m, switch to V/f Control.

Use Current Detection Speed Search to find the speed of the motor.

Notes on Motor Operation

Using a Standard Motor

■ Low Speed Range

There is a greater amount of loss when operating a motor using an drive than when running directly from line power. With a drive, the motor can become quite hot due to the poor ability to cool the motor at low speeds. The load torque should be reduced accordingly at low speeds. The figure above shows the allowable load characteristics for a standard Yaskawa motor. A motor designed specifically for operation with a drive should be used when 100% continuous torque is needed at low speeds.

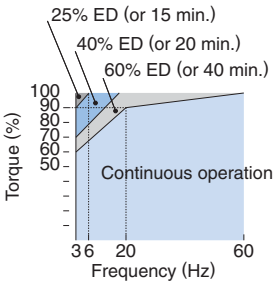

Allowable Load Characteristics for a Yaskawa Motor

■ Insulation Tolerance

Consider voltage tolerance levels and insulation in applications with an input voltage of over 440 V or particularly long wiring distances. Contact Yaskawa for consultation.

■ High Speed Operation

Problems may occur with the motor bearings and dynamic balance in applications operating at over 60 Hz. Contact Yaskawa for consultation.

■ Torque Characteristics

Torque characteristics differ when operating directly from line power. The user should have a full understanding of the load torque characteristics for the application.

■ Vibration and Shock

A1000 lets the user choose between high carrier PWM control and low carrier PWM. Selecting high carrier PWM can help reduce motor oscillation. Keep the following points in mind when using high carrier PWM:

(1) Resonance

Take particular caution when using a variable speed drive for an application that is conventionally run from line power at a constant speed. Shock-absorbing rubber should be installed around the base of the motor and the Jump Frequency selection should be enabled to prevent resonance.

(2) Any imperfection on a rotating body increases vibration with speed.

Caution should be taken when operating above the motor rated speed.

■ Audible Noise

Noise created during run varies by the carrier frequency setting. Using a high carrier frequency creates about as much noise as running from line power. Operating above the rated speed (i.e., above 60 Hz), however, can create unpleasant motor noise.

Using a Synchronous Motor

■ When the power to a drive running a PM motor is shut off, voltage continues to be generated at the motor terminals while the motor coasts to stop. Take the precautions described below to prevent shock and injury:

- Applications where the machine can still rotate even though the drive has fully stopped should have a load switch installed to the output side of the drive. Yaskawa recommends manual load switches from the AICUT LB Series by Aichi Electric Works Co., Ltd.
- Do not connect to a load that could potentially rotate the motor faster than the maximum allowable speed even when the drive has been shut off.
- Wait at least one minute after opening the load switch on the output side before inspecting the drive or performing any maintenance.
- Do not open and close the load switch while the motor is running, as this can damage the drive.
- If the motor is coasting, make sure the power to the drive is turned on and the drive output has completely stopped before closing the load switch.

■ Synchronous motors cannot be started directly from line power. Applications requiring line power to start should use an induction motor with the drive.

■ A single drive is not capable of running multiple synchronous motors at the same time. Use a standard induction motor for such setups.

■ At start, a synchronous motor may rotate slightly in the opposite direction of the Run command depending on parameter settings and motor type.

■ The amount of starting torque that can be generated differs by the type of motor being used. Set up the motor with the drive after verifying the starting torque, allowable load characteristics, impact load tolerance, and speed control range.
Contact Yaskawa if you plan to use a motor that does not fall within these specifications.

■ Even with a braking resistor, braking torque is less than 125% when running between 20% to 100% speed, and falls to less than half the braking torque when running at less than 20% speed.

■ The allowable load inertia moment is 50 times less than the motor inertia moment. Contact Yaskawa concerning applications with a larger inertia moment.

■ When using a holding brake, release the brake prior to starting the motor. Failure to set the proper timing can result in speed loss. Conveyor, transport, and hoist applications using a holding brake should run an IPM motor in Closed Loop Vector Control for PM motors.

■ To restart a coasting motor rotating at over 120 Hz, use the Short Circuit Braking* function to first bring the motor to a stop. Short Circuit Braking requires a special braking resistor. Contact Yaskawa for details.
Speed Search can be used to restart a coasting motor rotating slower than 120 Hz. If the motor cable is relatively long, however, the motor should instead be stopped using Short Circuit Braking and then restarted.
* Short Circuit Braking creates a short-circuit in the motor windings to forcibly stop a coasting motor.

Applications with Specialized Motors

■ Multi-Pole Motor
Because the rated current will differ from a standard motor, be sure to check the maximum current when selecting a drive. Always stop the motor before switching between the number of motor poles. If a regen overvoltage fault occurs or if overcurrent protection is triggered, the motor will coast to stop.

■ Submersible Motor
Because motor rated current is greater than a standard motor, select the drive capacity accordingly. Be sure to use a large enough motor cable to avoid decreasing the maximum torque level on account of voltage drop caused by a long motor cable.

■ Explosion-Proof Motor
Both the motor and drive need to be tested together to be certified as explosion-proof. The drive is not for explosion proof areas.
An explosion-proof pulse generators (PG) is used for an explosion-proof with voltage tolerance. Use a specially designed pulse coupler between the drive and the PG when wiring.

■ Geared Motor
Continuous operation specifications differ by the manufacturer of the lubricant. Due to potential problems of gear damage when operating at low speeds, be sure to select the proper lubricant. Consult with the manufacturer for applications that require speeds greater than the rated speed range of the motor or gear box.

■ Single-Phase Motor
Variable speed drives are not designed for operating single phase motors. Using a capacitor to start the motor causes excessive current to flow into the capacitors, potentially causing damage. A split-phase start or a repulsion start can end up burning out the starter coils because the internal centrifugal switch is not activated. A1000 is for use only with 3-phase motors.

■ Uras Vibrator
Uras vibrator is a vibration motor that gets power from centrifugal force by rotating unbalanced weights on both ends of the shaft. Make the following considerations when selecting a drive for use with an Uras vibrator:
(1) Uras vibrator should be used within the drive rated frequency
(2) Use V/f Control
(3) Increase the acceleration time five to fifteen times longer than would normally be used due to the high amount of load inertia of an Uras vibrator
Note: Contact Yaskawa for applications that require an acceleration time of less than 5 s.
(4) Drive may have trouble starting due to undertorque that results from erratic torque (static friction torque at start)

■ Motor with Brake

Caution should be taken when using a drive to operate a motor with a built-in holding brake. If the brake is connected to the output side of the drive, it may not release at start due to low voltage levels. A separate power supply should be installed for the motor brake. Motors with a built-in brake tend to generate a fair amount of noise when running at low speeds.

Power Driven Machinery (decelerators, belts, chains, etc.)

Continuous operation at low speeds wears on the lubricating material used in gear box type systems to accelerate and decelerate power driven machinery. Caution should also be taken when operating at speeds above the rated machine speed due to noise and shortened performance life.

	Name	Feature		Capacity Range (kW) 0.1 1 10 100 300 630	Outline
General Purpose	J1000	Compact V/f Control AC Drive	Single-Phase 100 V Class*1	0.1 1.1	· Ultra-small body enables side-by-side installation. Compact design of enclosure panel · Easy operation with the Potentiometer Option Unit · The noise-suppressing Swing PWM system reduces harsh sound. · The full-range fully-automatic torque boost function provides high torque output. (100%/1.5 Hz. 150%/3 Hz) · The Stall Prevention function and the speed search function ensure continuous operation, regardless of load/power supply fluctuations or momentary power loss. · The Overexcitation braking function enables rapid braking, without using a braking resistor.
			Three-Phase 200 V Class	0.1 5.5	
			Single-Phase 200 V Class	0.1 2.2	
			Three-Phase 400 V Class	0.2 5.5	
	V1000	Compact Vector Control AC Drive	Three-Phase 200 V Class	0.1 18.5	· Small body and high performance (Current vector control) · New technology for driving synchronous motors (IPMM/SPMM) as well as induction motors · High starting torque: 200%/0.5 Hz* Torque limit function * At Heavy Duty rating, for induction motors with 3.7 kW or lower · Application-specific function selection for simplified optimum setup · Easy maintenance using the detachable terminal block with the parameter backup function
			Single-Phase 200 V Class	0.1 3.7	
			Three-Phase 400 V Class	0.2 18.5	
	A1000	Advanced Vector Control AC Drive	Three-Phase 200 V Class	0.4 110*1	· New technology for driving synchronous motors (IPMM/SPMM) as well as induction motors · High starting torque IPM motor without speed sensors: 0 r/min 200% torque · Application preset function selection for simplified optimum setup · Easy maintenance using the detachable terminal block with the parameter backup function
			Three-Phase 400 V Class	0.4 630*1	
	Varispeed F7	Advanced Current Vector Control General-purpose Inverter Minimal Noise	Three-Phase 200 V Class	0.4 110	· Open Loop Vector control ensures 150% or higher torque during operation at 0.5 Hz. Flux Vector Control provides high torque of 150% at zero speed. · Easy maintenance and inspection using the detachable control circuit terminals and the detachable cooling fan · PID control and energy-saving control · The Auto-Tuning function upgrades all types of general motors to be compatible with high-performance drives.
			Three-Phase 400 V Class	0.4 300	
	Varispeed G7	General-purpose Inverter With Advanced Vector Control Minimal Noise	Three-Phase 200 V Class	0.4 110	· The 400 V class uses 3-level control for a more perfect output waveform. · Open Loop Vector control ensures 150% or higher torque during operation at 0.3 Hz. Flux Vector Control provides a high torque of 150% at zero speed. · Easy maintenance and inspection using the detachable control circuit terminals and the detachable cooling fan. · Software for various applications (for crane, hoist, etc.) · The Auto-Tuning function upgrades all types of general motors to be compatible with high-performance drives.
			Three-Phase 400 V Class	0.4 300	
	Varispeed AC	Environmentally Friendly Motor Drives Matrix Converter	Three-Phase 200 V Class	5.5 45	· The world's first matrix converter system that outputs AC voltage from AC voltage, and includes power supply regeneration capabilities. · The simple, highly-efficient drive can remarkably reduce power supply harmonics, without using peripherals.
			Three-Phase 400 V Class	5.5 75*1	
	Varispeed F7S	Super Energy-Saving Variable Speed Drive	Three-Phase 200 V Class	0.4 75	· Enables continuous operation of a synchronous motor (without PG) after momentary power loss, and startup of a coasting synchronous motor (without PG). · Enables compact configuration of building air-conditioning system using LONWORKS.
			Three-Phase 400 V Class	0.4 300*2	
Special Use	VS-626M5	Vector-controlled Inverter Drives With Power Regenerative Function For Machine Tools	Three-Phase 200 V Class	3.7 37	· For multiple-axis drive systems · For machine tool spindle drives · High-precision, quick-response, high-reliability AC drive system capable of using vector control to run a high-speed AC motor.
			Three-Phase 400 V Class	5.5 45	
	VS-626MR5		Three-Phase 200 V Class	3.7 37	
			Three-Phase 400 V Class	5.5 45	
	VS-626MC5		Three-Phase 200 V Class	0.4 75	· For machine tool spindle drives · Drive system capable of using vector control to run a high-speed AC motor.
			Three-Phase 400 V Class	0.4 75	
	VS-646HF5	High-frequency Inverter Drives	Three-Phase 200 V Class	2.2 7.5	· Provides a high rotation speed of 300,000 r/min in combination with a high-speed (2-pole) motor

*1: Some models are under development.
*2: Maximum capacity without PG: 160 kW

Global Service Network

Region	Service Area	Service Location	Service Agency	Telephone/Fax
North America	U.S.A.	Chicago (HQ) Los Angeles New Jersey Boston San Francisco Ohio North Carolina	❶YASKAWA ELECTRIC AMERICA INC.	Headquarters ☎ +1-847-887-7303 FAX +1-847-887-7070
	Mexico	Mexico City	❷PILLAR MEXICANA. S.A. DE C.V.	☎ +52-5593-28-69 FAX +52-5651-55-73
South America	South America	Sao Paũlo	❸YASKAWA ELÉCTRICO DO BRASIL LTD.A.	☎ +55-11-3585-1100 FAX +55-11-5581-8795
	Colombia	Bogota	❹VARIADORES LTD.A.	☎ +57-91-635-7460 FAX +57-91-611-3872
Europe	Europe, South Africa	Frankfurt	❺YASKAWA ELECTRIC EUROPE GmbH	☎ +49-6196-569-300 FAX +49-6196-569-398
			❻YASKAWA ENGINEERING EUROPE GmbH	☎ +49-6196-569-520 FAX +49-6196-888-598
Asia	Japan	Tokyo, offices nationwide	❼YASKAWA ELECTRIC CORPORATION (Manufacturing, sales)	☎ +81-3-5402-4502 FAX +81-3-5402-4580
			❽YASKAWA ELECTRIC ENGINEERING CORPORATION (After-sales service)	☎ +81-4-2931-1810 FAX +81-4-2931-1811
	South Korea	Seoul	❾YASKAWA ELECTRIC KOREA CORPORATION	☎ +82-2-784-7844 FAX +82-2-784-8495
			❿YASKAWA ENGINEERING KOREA Co.	☎ +82-2-3775-0337 FAX +82-2-3775-0338
			⓫Rockwell Samsung Automation Co., Ltd.	☎ +82-331-200-2981 FAX +82-331-200-2970
	China	Beijing, Shanghai, Guangzhou	⓬YASKAWA ELECTRIC (SHANGHAI) Co., Ltd.	☎ +86-21-5385-2200 FAX +86-21-5385-3299
	Taiwan	Taipei	⓭YASKAWA ELECTRIC TAIWAN Co.	☎ +886-2-2502-5003 FAX +886-2-2505-1280
	Singapore	Singapore	⓮YASKAWA ELECTRIC (SINGAPORE) Pte. Ltd.	☎ +65-6282-3003 FAX +65-6289-3003
			⓯YASKAWA ENGINEERING ASIA-PACIFIC Pte. Ltd.	☎ +65-6282-1601 FAX +65-6282-3668
	Thailand	Bangkok	⓰YASKAWA ELECTRIC (THAILAND) Co., Ltd.	☎ +66-2-693-2200 FAX +66-2-693-2204
	India	Mumbai	⓱LARSEN & TOUBRO LIMITED	Headquarters ☎ +91-22-67226200 +91-22-27782230 FAX +91-22-27783032
Oceania	Australia	Sydney (HQ) Melbourne	⓲ROBOTIC AUTOMATION Pty. Ltd.	Headquarters ☎ +61-2-9748-3788 FAX +61-2-9748-3817

A1000

IRUMA BUSINESS CENTER (SOLUTION CENTER)
480, Kamifujisawa, Iruma, Saitama 358-8555, Japan
Phone 81-4-2962-5696 Fax 81-4-2962-6138

YASKAWA ELECTRIC AMERICA, INC.
2121 Norman Drive South, Waukegan, IL 60085, U.S.A.
Phone 1-847-887-7000 Fax 1-847-887-7370

YASKAWA ELÉTRICO DO BRASIL LTDA.
Avenida Fagundes Filho, 620 São Paulo-SP CEP 04304-000, Brazil
Phone 55-11-3585-1100 Fax 55-11-5581-8795

YASKAWA ELECTRIC EUROPE GmbH
Hauptstraβe 185, 65760 Eschborn, Germany
Phone 49-6196-569-300 Fax 49-6196-569-398

YASKAWA ELECTRIC UK LTD.
1 Hunt Hill Orchardton Woods Cumbernauld, G68 9LF, United Kingdom
Phone 44-1236-735000 Fax 44-1236-458182

YASKAWA ELECTRIC KOREA CORPORATION
7F, Doore Bldg. 24, Yeoido-dong, Youngdungpo-Ku, Seoul 150-877, Korea
Phone 82-2-784-7844 Fax 82-2-784-8495

YASKAWA ELECTRIC (SINGAPORE) PTE. LTD.
151 Lorong Chuan, #04-01, New Tech Park 556741, Singapore
Phone 65-6282-3003 Fax 65-6289-3003

YASKAWA ELECTRIC (SHANGHAI) CO., LTD.
No.18 Xizang Zhong Road. Room 1702-1707, Harbour Ring Plaza Shanghai 200001, China
Phone 86-21-5385-2200 Fax 86-21-5385-3299

YASKAWA ELECTRIC (SHANGHAI) CO., LTD. BEIJING OFFICE
Room 1011A, Tower W3 Oriental Plaza, No.1 East Chang An Ave.,
Dong Cheng District, Beijing 100738, China
Phone 86-10-8518-4086 Fax 86-10-8518-4082

YASKAWA ELECTRIC TAIWAN CORPORATION
9F, 16, Nanking E. Rd., Sec. 3, Taipei, Taiwan
Phone 886-2-2502-5003 Fax 886-2-2505-1280

YASKAWA ELECTRIC CORPORATION

YASKAWA

In the event that the end user of this product is to be the military and said product is to be employed in any weapons systems or the manufacture thereof, the export will fall under the relevant regulations as stipulated in the Foreign Exchange and Foreign Trade Regulations. Therefore, be sure to follow all procedures and submit all relevant documentation according to any and all rules, regulations and laws that may apply.

Specifications are subject to change without notice
for ongoing product modifications and improvements.

© 2008 YASKAWA ELECTRIC CORPORATION. All rights reserved.

LITERATURE NO. KAEP C710616 22B
Published in Japan October 2008 08-7 ①-0
08-5-11
Printed on 100% recycled paper
with soybean oil ink.