EMERSON
Industrial Automation

Advanced User Guide

Mentor MP

High performance DC drive
25A to 7400A, 480V to 690V
Two or four quadrant operation

Part Number: 0476-0002-04
Issue: 4

CONTROL TECHNIQUES

www.controltechniques.com

General Information

The manufacturer accepts no liability for any consequences resulting from inappropriate, negligent or incorrect installation or adjustment of the optional operating parameters of the equipment or from mismatching the variable speed drive with the motor.

The contents of this guide are believed to be correct at the time of printing. In the interests of a commitment to a policy of continuous development and improvement, the manufacturer reserves the right to change the specification of the product or its performance, or the contents of the guide, without notice.

All rights reserved. No parts of this guide may be reproduced or transmitted in any form or by any means, electrical or mechanical including photocopying, recording or by an information storage or retrieval system, without permission in writing from the publisher.

Drive firmware version

This product is supplied with the latest firmware versions. If this drive is to be connected to an existing system or machine, all drive firmware versions should be verified to confirm the same functionality as drives of the same model already present. This may also apply to drives returned from a Control Techniques Service Centre or Repair Centre. If there is any doubt please contact the supplier of the product.

This drive contains two firmware versions which can be checked by looking at Pr **11.29** (**di14/0.49**) and Pr **11.34**. This takes the form of xx.yy.zz where Pr **11.29** (**di14/0.49**) displays xx.yy and Pr **11.34** displays zz for the user firmware.
Power firmware is displayed at Pr **11.56** and takes the form of xx.yy. (e.g. for firmware version 01.06.00,Pr **11.29** (**di14/0.49**) = 1.06 and Pr **11.34** displays 0 which is compatible with power firmware version 01.09, Pr **11.56** = 1.09)

Environmental statement

Control Techniques is committed to minimising the environmental impacts of its manufacturing operations and of its products throughout their life cycle. To this end, we operate an Environmental Management System (EMS) which is certified to the International Standard ISO 14001. Further information on the EMS, our Environmental Policy and other relevant information is available on request, or can be found at www.greendrives.com.

The electronic variable-speed drives manufactured by Control Techniques have the potential to save energy and (through increased machine/process efficiency) reduce raw material consumption and scrap throughout their long working lifetime. In typical applications, these positive environmental effects far outweigh the negative impacts of product manufacture and end-of-life disposal.

Nevertheless, when the products eventually reach the end of their useful life, they must not be discarded but should instead be recycled by a specialist recycler of electronic equipment. Recyclers will find the products easy to dismantle into their major component parts for efficient recycling. Many parts snap together and can be separated without the use of tools, while other parts are secured with conventional fasteners. Virtually all parts of the product are suitable for recycling.

Product packaging is of good quality and can be re-used. Large products are packed in wooden crates, while smaller products come in strong cardboard cartons which themselves have a high recycled fibre content. If not re-used, these containers can be recycled. Polythene, used on the protective film and bags for wrapping product, can be recycled in the same way. Control Techniques' packaging strategy prefers easily-recyclable materials of low environmental impact, and regular reviews identify opportunities for improvement.

When preparing to recycle or dispose of any product or packaging, please observe local legislation and best practice.

REACH legislation

EC Regulation 1907/2006 on the Registration, Evaluation, Authorization and restriction of Chemicals (REACH) requires the supplier of an article to inform the recipient if it contains more than a specified proportion of any substance which is considered by the European Chemicals Agency (ECHA) to be a Substance of Very High Concern (SVHC) and is therefore listed by them as a candidate for compulsory authorisation.

For current information on how this requirement applies in relation to specific Control Techniques products, please approach your usual contact in the first instance. Control Techniques position statement can be viewed at:

http://www.controltechniques.com/REACH

Copyright © October 2011 Control Techniques Ltd
Issue Number: 4

Firmware versions:

User: 01.06.00
Power: 01.09.00

Contents

1 Parameter structure 5
1.1 Menu 0 (sub block) 5
1.2 Pre-defined sub blocks 6
1.3 Menu 0 (linear) 7
1.4 Advanced menus 8
1.5 Solutions Modules 8

2 Keypad and display 9
2.1 Understanding the display 9
2.1.1 SM-Keypad (LED) 9
2.1.2 MP-Keypad (LCD) 9
2.2 Keypad operation 9
2.3 Status mode 11
2.4 Parameter view mode 11
2.5 Edit mode 11
2.6 MP-Keypad 12
2.7 Parameter access level and security 13
2.7.1 User security 13
2.7.2 Setting user security 13
2.7.3 Unlocking user security 13
2.7.4 Disabling user security 13
2.8 Alarm and trip display 13
2.9 Keypad control mode 14
2.10 Drive reset 14
2.11 Second motor parameters 14
2.12 Special display functions 14

3 Parameter x.00 15
3.1 Parameter x.00 reset 15
3.2 Saving parameters in drive EEPROM 15
3.3 Loading defaults 16
3.4 Differences between European and USA defaults 16
3.5 SMARTCARD transfers 16
3.6 Display non-default values or destination parameters 16

4 Parameter description format 17
4.1 Parameter ranges and variable maximums: 18
4.1.1 Default 19
4.1.2 Second motor parameter 19
4.1.3 Update rate 19
4.2 Sources and destinations 19
4.2.1 Sources 19
4.2.2 Destinations 19
4.2.3 Sources and destinations 19
4.3 Update rates 20
4.3.1 Speed reference update rate 20
4.3.2 Hard speed reference update rate 20
4.3.3 Torque reference update rate 20

5 Advanced parameter descriptions ... 21
5.1 Overview ... 21
5.2 Menu 1: Speed reference ... 22
5.3 Menu 2: Ramps ... 34
5.4 Menu 3: Speed feedback and speed control ... 41
5.5 Menu 4: Torque and current control ... 58
5.6 Menu 5: Motor and field control ... 70
5.7 Menu 6: Sequencer and clock ... 97
5.8 Menu 7: Analog I/O ... 108
5.9 Menu 8: Digital I/O ... 115
5.10 Menu 9: Programmable logic, motorized pot and binary sum ... 122
5.11 Menu 10: Status and trips ... 130
5.12 Menu 11: General drive setup ... 145
5.13 Menu 12: Threshold detectors, variable selectors and brake control function ... 160
5.13.1 Threshold detectors function ... 160
5.13.2 Variable selectors function ... 162
5.13.3 Brake control function ... 165
5.14 Menu 13: Position control ... 172
5.15 Menu 14: User PID controller ... 180
5.16 Menus 15, 16 and 17: Solutions Module slots ... 186
5.17 Menu 18: Application menu 1 ... 187
5.18 Menu 19: Application menu 2 ... 188
5.19 Menu 20: Application menu 3 ... 189
5.20 Menu 21: Second motor parameters ... 190
5.21 Menu 22: Additional menu 0 setup ... 198
5.22 Menu 23 Header definitions ... 199
5.23 Pre-Defined Sub Blocks ... 201
5.24 Menu 0 (linear) ... 202
5.25 Menu structure ... 202
5.26 32 bit parameters ... 203
5.26.1 Drive parameters ... 203
5.26.2 Solutions Module parameters ... 203

6 Serial communications protocol ... 204
6.1 ANSI communications protocol ... 204
6.1.1 Introduction ... 204
6.1.2 Physical layer and UART ... 204
6.1.3 Reading a parameter ... 204
6.1.4 Writing to a parameter ... 204
6.1.5 Drive address ... 205
6.1.6 Short commands ... 205
6.1.7 Summary of control characters ... 205
6.2 CT Modbus RTU specification ... 206
6.2.1 MODBUS RTU ... 206
6.2.2 Slave address ... 207
6.2.3 MODBUS registers ... 207
6.2.4 Data consistency ... 207
6.2.5 Data encoding ... 207
6.2.6 Function codes ... 207
6.2.7 Extended data types ... 208
6.2.8 Exceptions ... 209
6.2.9 CRC ... 210
6.2.10 Device compatibility parameters ... 210

7 Performance ... 211
7.1 Digital speed reference ... 211
7.2 Analog reference ... 211
7.3 Analog outputs ... 211
7.4 Digital inputs and outputs ... 211
7.5 Current feedback ... 211
7.6 Bandwidth ... 211
7.6.1 Speed loop ... 211
7.6.2 Current loop ... 211

1 Parameter structure

The drive parameter structure consists of menus and parameters.

The drive initially powers up in sub menu mode. Once Level 2 access (L2) has been enabled (refer to Pr **11.44** (**SE14, 0.35**)) the left and right buttons are used to navigate between numbered menus.

For further information, see section 2.7 *Parameter access level and security* on page 13.

Figure 1-1 Parameter navigation

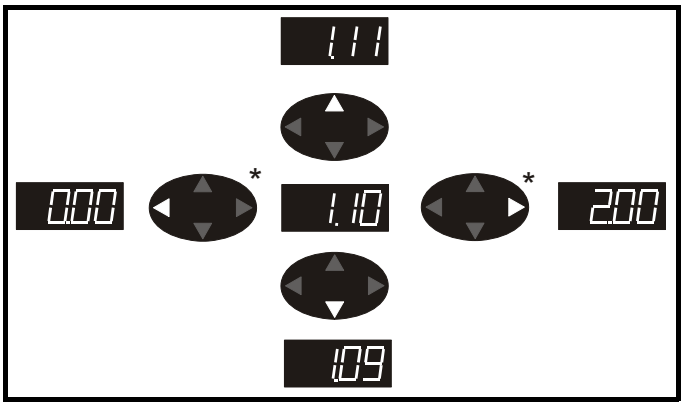

* can only be used to move between menus if L2 access has been enabled (refer to Pr **11.44** (**SE14, 0.35**).

The menus and parameters roll over in both directions; i.e. if the last parameter is displayed, a further press will cause the display to rollover and show the first parameter.

When changing between menus the drive remembers which parameter was last viewed in a particular menu and thus displays that parameter.

Figure 1-2 Menu structure

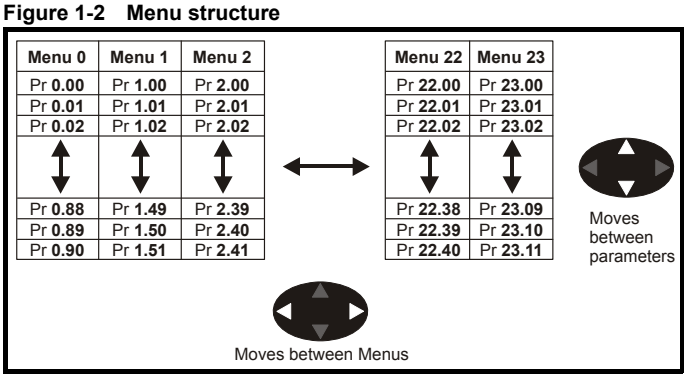

1.1 Menu 0 (sub block)

Menu 0 can be accessed by 2 methods:

1. Pr **11.44** (**SE14, 0.35**) = 0. Sub block mode.
2. Pr **11.44** (**SE14, 0.35**) <>0. Linear mode.

Menu 23 contains the parameters to allow menu 0 to be customized in sub block mode. The first sub block is a user defined area (USEr) which is configured by the parameters in menu 22. As default there are no parameters configured to the user sub block and so it is empty. The next 7 sub blocks are pre-defined. Access to the pre-defined blocks is enabled or disabled by Pr **23.03** to Pr **23.09**.

Movement between sub blocks is achieved with the left and right keys.

Pr **23.01** contains all the sub block headers.

Table 1-1 and Figure 1-3 show the result of the direction keys when Pr **11.44** (**SE14, 0.35**) is set to L1 (0). When Pr **11.44** (**SE14, 0.35**)is not 0 the left and right keys will allow access to the advance parameter set and menu 0 will become a linear menu.

Table 1-1 Keypad navigation

Starting location	Action	Finishing location
Header	Right	Next header
	Left	Previous header
	Up	First parameter in header block
	Down	Last parameter in header block
Parameter	Right	Next header
	Left	Previous header
	Up	Next parameter in header block
	Down	Previous parameter in header block

When moving to the user block header, the user block header is only displayed if there are some valid parameters in the block. When moving between pre-defined header blocks the pre-defined header block is only displayed if the pre-defined block is enabled.

When moving between parameters within a block, only valid parameters are displayed.

Figure 1-3 Sub block navigation

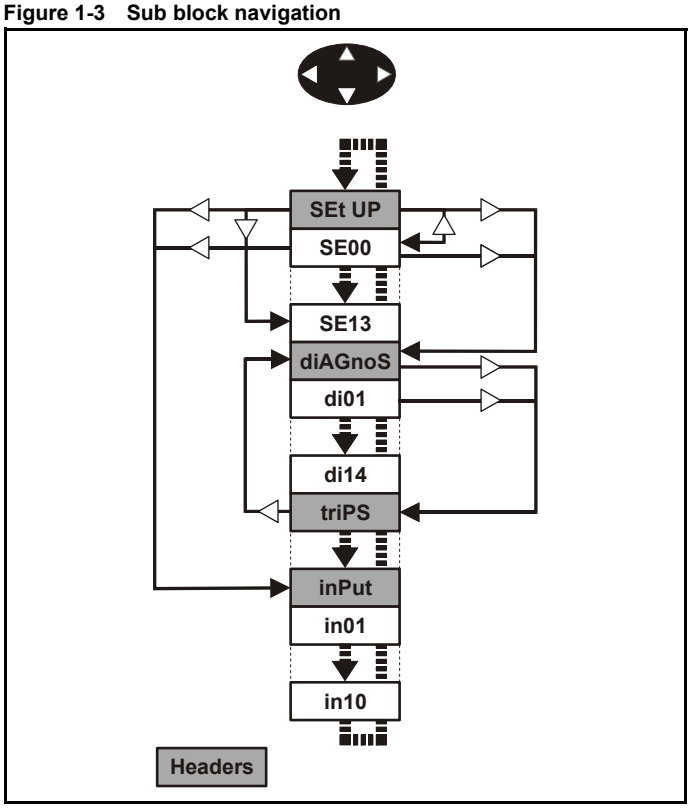

Coding

The coding defines the attributes of the parameter as follows.

Coding	Attribute
{X.XX}	Copied Menu 0 or advanced parameter
Bit	1 bit parameter: 'On' or 'OFF' on the display
Bi	Bipolar parameter
Uni	Unipolar parameter
Txt	Text: the parameter uses text strings instead of numbers.
SP	Spare: not used
FI	Filtered: some parameters which can have rapidly changing values are filtered when displayed on the drive keypad for easy viewing.
DE	Destination pointer parameter: This parameter can be used to set up the location (i.e. menu/parameter number) where the destination data is to be routed.
VM	Variable maximum: the maximum of this parameter can vary.
DP	Decimal place: indicates the number of decimal places used by this parameter.
ND	No default: when defaults are loaded (except when the drive is manufactured or on EEPROM failure) this parameter is not modified.
RA	Rating dependant: this parameter is likely to have different values and ranges with drives of different voltage and current ratings. Parameters with this attribute will not be transferred to the destination drive by a SMARTCARD when the rating of the destination drive is different from the source drive if the drive voltage ratings are different or the file is a parameter file. However, the value will be transferred if only the current rating is different and the file is a differences from default type file.
NC	Not copied: not transferred to or from SMARTCARD during copying.
NV	Not visible: not visible on the keypad.
PT	Protected: cannot be used as a destination.
US	User save: saved in drive EEPROM when the user initiates a parameter save.
RW	Read/write: can be written by the user.
RO	Read only: can only be read by the user
BU	Bit default one/unsigned: Bit parameters with this flag set to one have a default of one (all other bit parameters have a default of zero. Non-bit parameters are unipolar if this flag is one.
PS	Power-down save: parameter automatically saved in drive EEPROM when the under volts (UV) trip occurs. Power-down save parameters are also saved in the drive when the user initiates a parameter save.

23.01	Sub block headers								
RO	Txt	NC					PT		BU
⇕	USEr (0), SEt UP (1), diAGnoS (2), triPS (3), SP LOOP (4), SintEr (5), Fb SP (6), inPut (7)			⇨	USEr (0)				

Defines the sub block headers. Can be used by the MP-Keypad to display the same strings as the SM-Keypad.

23.02	Binary sum of pre-defined sub block enables								
RO		NC					PT		BU
⇕	0 to 127			⇨	0				

The OR of Pr **23.03** to Pr **23.09**. To be used by the MP-Keypad.

Parameter	Value
23.03	1
23.04	2
23.05	4
23.06	8
23.07	16
23.08	32
23.09	64

23.03 - 23.09	Pre-defined sub block enable								
RW	Bit							US	BU
⇕	0 to1			⇨	1				

When this parameter is set to 1 the associated pre-defined sub block is accessible. When this parameter is 0 the associated pre-defined block is bypassed.

Parameter	Description	Display
23.03	Set up	SEt UP
23.04	Diagnostic	diAGnoS
23.05	Trips	triPS
23.06	Speed loop	SP LOOP
23.07	Serial interface	SintEr
23.08	Speed feedback	Fb SP
23.09	IO	InPut

1.2 Pre-defined sub blocks

Menu 0	Parameter	Description	Display
0.01 to **0.20**		Configured by Pr **22.01** to Pr **22.20**	

setup

Menu 0	Parameter	Description	Display
0.21	**1.00**	Parameter 0	**SE00**
0.22	**1.07**	Minimum reference clamp	**SE01**
0.23	**1.06**	Maximum reference clamp	**SE02**
0.24	**2.11**	Acceleration rate	**SE03**
0.25	**2.21**	Deceleration rate	**SE04**
0.26	**1.14**	Reference selector	**SE05**
0.27	**5.09**	Armature rated voltage	**SE06**
0.28	**5.07**	Motor rated current	**SE07**
0.29	**5.08**	Base speed	**SE08**
0.30	**11.42**	Parameter copying	**SE09**
0.31	**5.70**	Rated field current	**SE10**
0.32	**5.73**	Rated field voltage	**SE11**
0.33	**5.77**	Enable field control	**SE12**
0.34	**5.12**	Autotune	**SE13**
0.35	**11.44**	Security status	**SE14**

Diagnostic

Menu 0	Parameter	Description	Display
0.36	1.01	Speed reference selected	di01
0.37	1.03	Pre-ramp reference	di02
0.38	2.01	Post ramp reference	di03
0.39	3.01	Final speed reference	di04
0.40	3.02	Speed feedback	di05
0.41	3.04	Speed controller output	di06
0.42	4.03	Torque demand	di07
0.43	4.01	Current magnitude	di08
0.44	5.56	Field current feedback	di09
0.45	5.02	Armature voltage	di10
0.46	1.11	Reference enabled indicator	di11
0.47	1.12	Reverse selected indicator	di12
0.48	1.13	Jog selected indicator	di13
0.49	11.29	Software version	di14
0.50	0.00	Spare	

Trips

Menu 0	Parameter	Description	Display
0.51	10.20	Trip 0	tr01
0.52	10.21	Trip 1	tr02
0.53	10.22	Trip 2	tr03
0.54	10.23	Trip 3	tr04
0.55	10.24	Trip 4	tr05
0.56	10.25	Trip 5	tr06
0.57	10.26	Trip 6	tr07
0.58	10.27	Trip 7	tr08
0.59	10.28	Trip 8	tr09
0.60	10.29	Trip 9	tr10

Speed loop

Menu 0	Parameter	Description	Display
0.61	3.10	Speed controller proportional gain	SP01
0.62	3.11	Speed controller integral gain	SP02
0.63	3.12	Speed controller differential feedback gain	SP03
0.64	0.00	Spare	
0.65	0.00	Spare	

Serial interface

Menu 0	Parameter	Description	Display
0.66	11.25	Baud rate	Si01
0.67	11.23	Serial address	Si02
0.68	0.00	Spare	
0.69	0.00	Spare	
0.70	0.00	Spare	

Speed feedback

Menu 0	Parameter	Description	Display
0.71	3.26	Speed feedback selector	Fb01
0.72	3.51	Tachometer rating (V/1000 rpm)	Fb02
0.73	3.53	Tachometer input mode	Fb03
0.74	3.52	Tachometer speed feedback	Fb04
0.75	3.34	Drive encoder lines per revolution	Fb05
0.76	3.36	Encoder supply	Fb06
0.77	3.38	Encoder type	Fb07
0.78	3.39	Encoder termination select	Fb08
0.79	3.27	Encoder speed feedback	Fb09
0.80	0.00	Spare	

IO

Menu 0	Parameter	Description	Display
0.81	7.15	Analog input 3 mode	in01
0.82	7.01	Analog input 1	in02
0.83	7.02	Analog input 2	in03
0.84	7.03	Analog input 3	in04
0.85	8.01	I/O state 1	in05
0.86	8.02	I/O state 2	in06
0.87	8.03	I/O state 3	in07
0.88	8.04	I state 4	in08
0.89	8.05	I state 5	in09
0.90	8.06	I state 6	in10

For more information on the sub block function please refer to *Menu 23.*

1.3 Menu 0 (linear)

Menu 0 is used to bring together various commonly used parameters for basic easy set up of the drive.

Appropriate parameters are copied from the advanced menus into menu 0 and thus exist in both locations.

For further information, refer to section 1.1 *Menu 0 (sub block)* on page 5.

Figure 1-4 Menu 0 copying

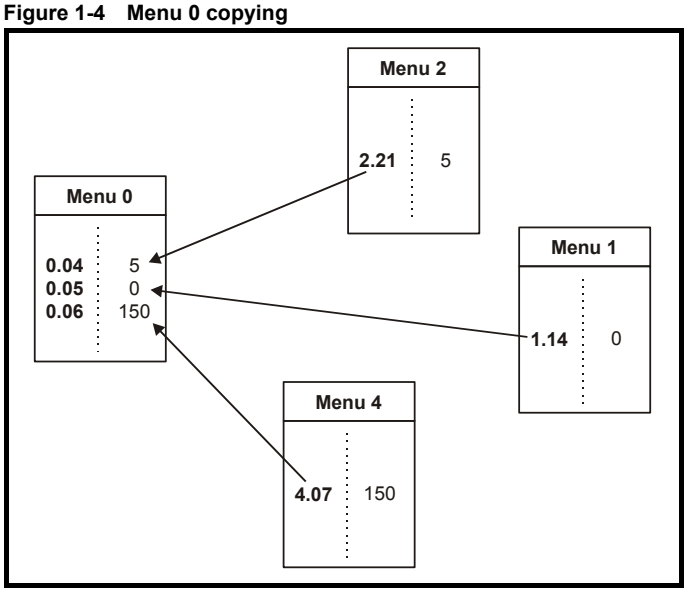

1.4 Advanced menus

The advanced menus consist of groups of parameters appropriate to a specific function or feature of the drive. Menus 0 to 23 can be viewed on both keypads. Menus 40 and 41 are specific to the MP-Keypad (LCD). Menus 70 to 91 can be viewed with an MP-Keypad (LCD) only when an SM-Applications module is installed.

Table 1-2 Advanced menu descriptions

Menu	Description	LED	LCD
0	Commonly used basic set up parameters for quick / easy programming	✓	✓
1	Speed reference	✓	✓
2	Ramps	✓	✓
3	Speed feedback and speed control	✓	✓
4	Torque and current control	✓	✓
5	Motor control including field regulator	✓	✓
6	Sequencer and clock	✓	✓
7	Analog I/O	✓	✓
8	Digital I/O	✓	✓
9	Programmable logic, motorized pot and binary sum	✓	✓
10	Status and trips	✓	✓
11	General drive setup	✓	✓
12	Threshold detectors and variable selectors	✓	✓
13	Position control	✓	✓
14	User PID controller	✓	✓
15	Solutions Module setup	✓	✓
16	Solutions Module setup	✓	✓
17	Solutions Module setup	✓	✓
18	Application menu 1	✓	✓
19	Application menu 2	✓	✓
20	Application menu 3	✓	✓
21	Second motor parameters	✓	✓
22	Menu 0 setup - user area	✓	✓
23	Menu 0 sub block control	✓	✓
40	Keypad configuration menu	X	✓
41	User filter menu	X	✓
70	PLC registers	X	✓
71	PLC registers	X	✓
72	PLC registers	X	✓
73	PLC registers	X	✓
74	PLC registers	X	✓
75	PLC registers	X	✓
85	Timer function parameters	X	✓
86	Digital I/O parameters	X	✓
88	Status parameters	X	✓
90	General parameters	X	✓
91	Fast access parameters	X	✓

Key: ✓= Available
X = Not available

1.5 Solutions Modules

Any Solutions Module type is recognised with all drive types in any slots. The relevant template is used to define menu 15 for the module type installed in slot 1, menu 16 for slot 2, and menu 17 for slot 3.

2 Keypad and display

2.1 Understanding the display

There are two types of keypad available for the Mentor MP. The SM-Keypad has an LED display, and the MP-Keypad has an LCD display.

2.1.1 SM-Keypad (LED)

The display consists of two horizontal rows of 7 segment LED displays.

The upper display shows the drive status or the current menu and parameter number being viewed.

The lower display shows the parameter value or the specific trip type.

Figure 2-1 SM-Keypad

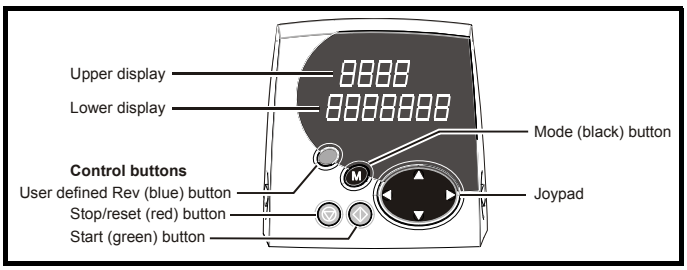

2.1.2 MP-Keypad (LCD)

The display consists of three lines of text.

The top line shows the drive status or the current menu and parameter number being viewed on the left, and the parameter value or the specific trip type on the right.

The lower two lines show the parameter name or the help text.

Figure 2-2 MP-Keypad

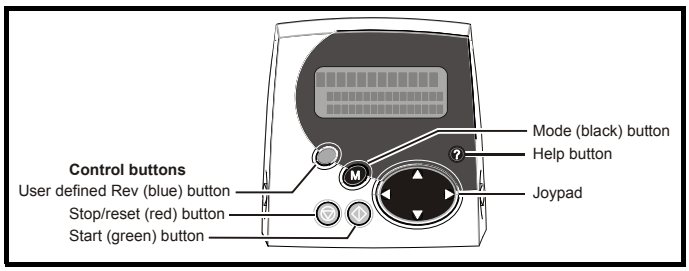

NOTE

The red stop button is also used to reset the drive.

The SM-Keypad and the MP-Keypad can indicate when a SMARTCARD access is taking place or when the second motor map is active (menu 21). These are indicated on the displays as follows:

	SM-Keypad	MP-Keypad
SMARTCARD access taking place	The decimal point after the fourth digit in the upper display will flash.	The symbol ‘CC’ will appear in the lower left hand corner of the display
Second motor map active	The decimal point after the third digit in the upper display will flash	The symbol ‘Mot2’ will appear in the lower left hand corner of the display
Solutions Module parameters displayed		The symbol ‘Opx’ will appear in the left hand corner of the display

2.2 Keypad operation

Control buttons

The keypad consists of:

1. Joypad - used to navigate the parameter structure and change parameter values.
2. Mode button - used to change between the display modes – parameter view, parameter edit, status.
3. Three control buttons - used to control the drive if keypad mode is selected.
4. Help button (MP-Keypad only) - displays text briefly describing the selected parameter.

The Help button toggles between other display modes and parameter help mode. The up and down functions on the joypad scroll the help text to allow the whole string to be viewed. The right and left functions on the joypad have no function when help text is being viewed.

The display examples in this section show the SM-Keypad, seven segment, LED display. The examples are the same for the MP-Keypad, The exceptions is that the information displayed on the lower row on the SM-Keypad is displayed on the right hand side of the top row on the MP-Keypad.

Figure 2-3 Display modes

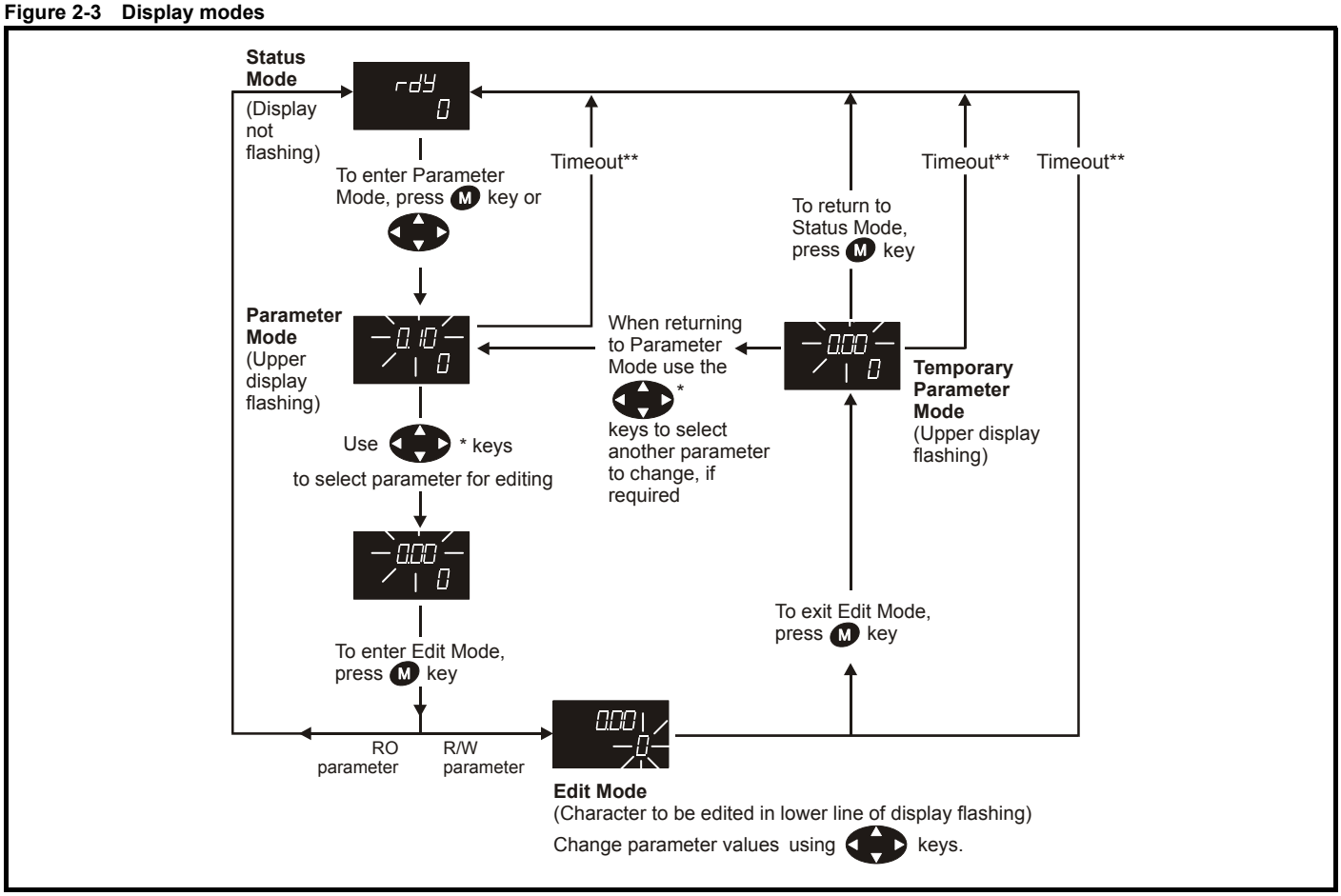

* Can only be used to move between menus if L2 access has been enabled Pr **11.44** (**SE14, 0.35**)
Time-out defined by Pr **11.41 (default value = 240 s).

Figure 2-4 Mode examples

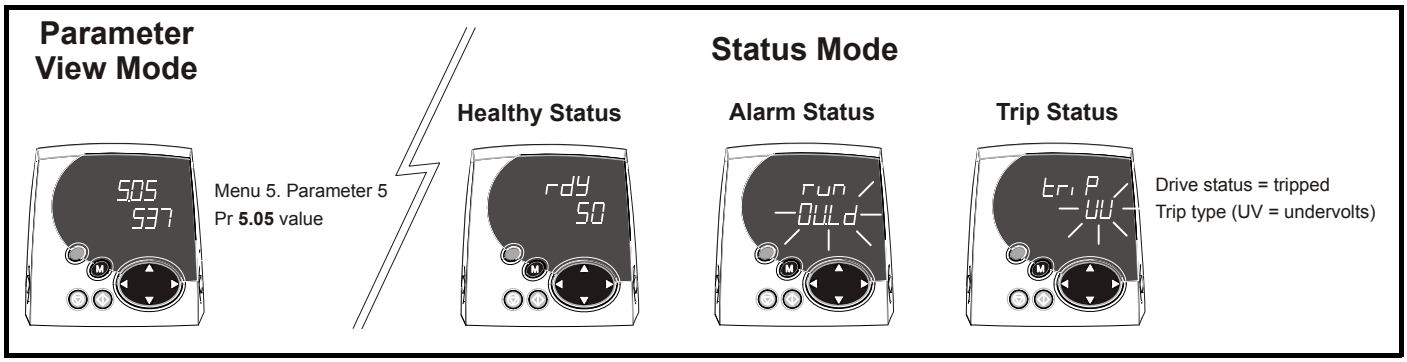

WARNING

Do not change parameter values without careful consideration; incorrect values may cause damage or a safety hazard.

NOTE

When changing the values of parameters, make a note of the new values in case they need to be entered again.

NOTE

For new parameter-values to apply after the AC supply to the drive is interrupted, new values must be saved.

2.3 Status mode

In status mode the 1st row shows a four letter mnemonic indicating the status of the drive. The second row show the parameter last viewed or edited.

State	Upper row
Inhibited: enable input is inactive	inh
Ready: enable closed, but drive not active	rdY
Stopped: active, but holding zero speed	StoP
Running: active and motor running	run
Decelerating: speed is ramping to zero after a stop	dEC
Position: position control active during orientation stop	POS
Tripped: drive is tripped	triP

2.4 Parameter view mode

In this mode the 1st row shows the menu.parameter number and the 2nd row the parameter value. The 2nd row gives a parameter value range of -999,999 to 9,999,999 with or without decimal points. (32 bit parameters can have values outside this range if written by an application module. If the value is outside this range "-------"is shown and the parameter value cannot be changed from the keypad.) The Up and Down keys are used to select the parameter and the Left and Right keys are used to select the menu. In this mode the Up and Down keys are used to select the parameter within the selected menu.

Holding the Up key will cause the parameter number to increment until the top of the menu is reached. A single Up key action when the last parameter in a menu is being displayed will cause the parameter number to roll over to Pr **x.00**. Similarly holding the Down key will cause the parameter number to decrement until Pr **x.00** is reached and a single Down key action will cause the parameter number to roll under to the top of the menu. Pressing the Up and Down keys simultaneously will select Pr **x.00** in the currently selected menu.

The Left and Right keys are used to select the required menu (provided the security has been unlocked to allow access to menus other than 0). Holding the Right key will cause the menu number to increment until the Menu 23 is reached. A single Right key action when Menu 23 is being displayed will cause the menu number to roll over to 0. Similarly holding the Left key will cause the menu number to decrement to 0 and a single key action will cause the menu number to roll under to Menu 23. Pressing the Left and Right keys simultaneously will select Menu 0.

The drive remembers the parameter last accessed in each menu such that when a new menu is entered the last parameter viewed in that menu will re-appear.

2.5 Edit mode

Up and Down keys are used to increase and decrease parameter values respectively. If the maximum value of a parameter is greater than 9 and it is not represented by strings, then the Left and Right keys can be used to select a digit to adjust.

The number of digits which can be independently selected for adjustment depends on the maximum value of the parameter. Pressing the Right key when the least significant digit is selected will cause the most significant digit to be selected, and vice-versa if the Left key is pressed when the most significant digit is selected.

When a digit value is not being changed by the Up or Down keys the selected digit flashes to indicate which one is currently selected. For string type parameters the whole string flashes when adjustment is not occurring because there is no digit selection.

During adjustment of a parameter value with the Up or Down keys the display does not flash, providing the parameter value is in range, such that the user can see the value being edited without interruption.

Adjustment of a numerical value can be done in one of two ways; firstly by using the Up and Down keys only, the selected digit remaining the least significant digit; and secondly by selecting each digit in turn and adjusting them to the required value. Holding the Up or Down key in the first method will cause the parameters value to change more rapidly the longer the key is held, until such time that the parameters maximum or minimum is reached.

However,with the second method, an increasing rate of change does not take place when adjusting any other digit other than the least significant digit since a digit can only have one of 10 different values.

Holding the Up or Down key will cause an auto repeat and roll over to more significant digits but the rate of change is unaltered. If the maximum or minimum is exceeded when adjusting any other digit than the least significant one, the maximum value will flash on the display to warn the user that the maximum or minimum has been reached. If the user releases the Up or Down key before the flashing stops the last in range value will re-appear on the display. If the Up or Down key is held the display will stop flashing after 3 seconds and the maximum value will be written to the parameter.

Parameters can be set to 0 by pressing the Up and Down keys simultaneously.

2.6 MP-Keypad

MP-Keypad gives the user access to two menus. Menu 40 is for MP-Keypad setup and Menu 41 selects commonly used parameters for quick browsing.

Table 2-1 Menu 40 parameter descriptions

Parameter		Range(⇕)	Default(⇨)	Type					
40.00	Parameter 0	0 to 32767	0	RW	Uni				
40.01	Language selection	English (0), Custom (1), French (2), German (3), Spanish (4), Italian (5)	English (0)	RW	Txt				US
40.02	Software version	99999		RO	Uni			PT	
40.03	Save to flash	Idle (0), Save (1), Restore (2), Default (3)	Idle (0)	RW	Txt				
40.04	LCD contrast	0 to 31	16	RW	Uni				US
40.05	Drive and attribute database upload was bypassed	Updated (0), Bypass (1)		RO	Txt			PT	
40.06	Browsing favourites control	Normal (0), Filter (1)	Normal (0)	RW	Txt				
40.07	Keypad security code	0 to 999	0	RW	Uni				US
40.08	Communication channel selection	Disable (0), Slot1 (1), Slot2 (2), Slot3 (3), Slave (4), Direct (5)	Disable (0)	RW	Txt				US
40.09	Hardware key code	0 to 999	0	RW	Uni				US
40.10	Drive node ID (Address)	0 to 255	1	RW	Uni				US
40.11	Flash ROM memory size	4Mbit (0), 8Mbit (1)		RO	Txt			PT	US
40.19	String database version number	0 to 999999		RO	Uni			PT	
40.20	Screen saver strings and enable	None (0), Default (1), User (2)	Default (1)	RW	Txt				US
40.21	Screen saver interval	0 to 600 s	120	RW	Uni				US
40.22	Turbo browse time interval	0 to 200 ms	50 ms	RW	Uni				US
40.23	Product identification	Unidrive SP (0), Commander SK (1), Mentor MP (2), Affinity (4), Digitax ST (5)		RO	Txt				

Table 2-2 Menu 41 parameter descriptions

Parameter		Range(⇕)	Default(⇨)	Type					
41.00	Parameter 0	0 to 32767	0	RW	Uni				
41.01 to 41.50	Browsing filter source F01 to F50	Pr **0.00** to Pr **22.99**	0	RW	Uni				
41.51	Browsing favourites control	Normal (0), Filter (1)	Normal (0)	RW	Txt				

RW	Read / Write	RO	Read only	Uni	Unipolar	Bi	Bi-polar
Bit	Bit parameter	Txt	Text string	FI	Filtered	DE	Destination
NC	Not copied	RA	Rating dependent	PT	Protected	US	User save
PS	Power down save						

For more information about the MP-Keypad, see the *SM-Keypad Plus User Guide*.

2.7 Parameter access level and security

The parameter access levels determine whether the user has access to Menu 0 (in sub block mode) only or to all of the advanced menus (Menus 1 to 23), in addition to Menu 0 (in linear mode).

The user security determines whether the access to the user is read only or read write.

The user security and the parameter access level can operate independently of each other as shown in Table 2-3 .

Table 2-3 User security and parameter access levels

Parameter access level	User security	Menu 0 status	Advanced menus status
L1	Open	Sub block RW	Not visible
L1	Closed	Sub block RO	Not visible
L2	Open	Linear RW	RW
L2	Closed	Linear RO	RO

RW = Read / write access RO = Read only access

The default settings of the drive are parameter access level L1 and User Security Open, i.e. read / write access to Menu 0 with the advanced menus, not visible

2.7.1 User security

The user security, when set, prevents write access to any of the parameters (other than Pr **11.44** (**SE14, 0.35**) Access Level) in any menu.

Figure 2-5 User security open

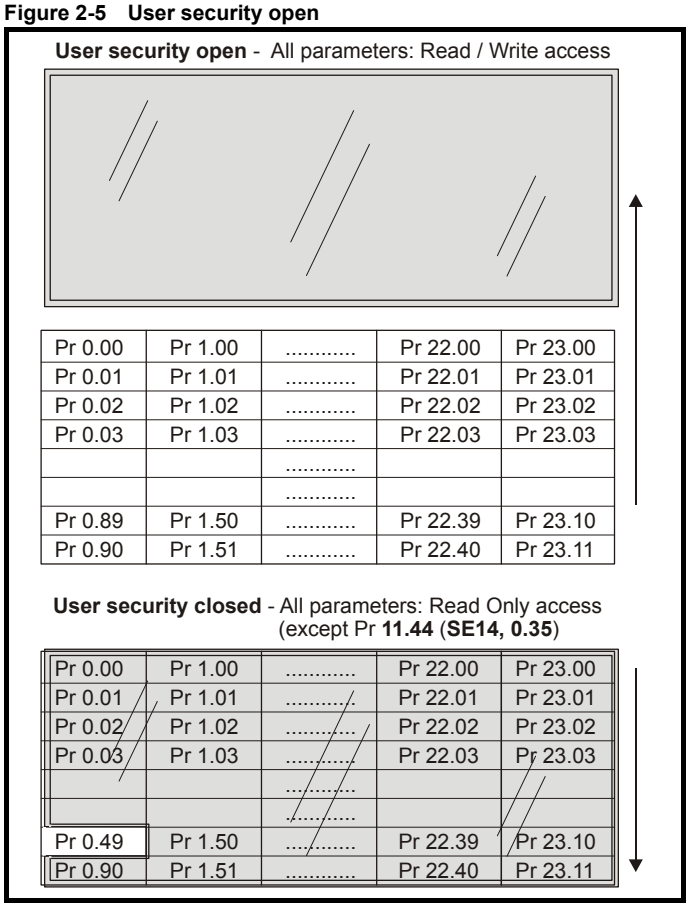

2.7.2 Setting user security

Enter a value between 1 and 999 in Pr **11.30** and press the M button; the security code has now been set to this value. To activate the security, the access level must be set to Loc in Pr **11.44** (**SE14, 0.35**). When the drive is reset, the security code will have been activated and the drive returns to access level L1. The value of Pr **11.30** will return to 0 in order to hide the security code. At this point, the only parameter that can be changed by the user is the access level Pr **11.44** (**SE14, 0.35**).

2.7.3 Unlocking user security

Select a read write parameter to be edited and press the M button; the upper display will now show CodE.

Use the arrow buttons to set the security code and press the M button. With the correct security code entered, the display will revert to the parameter selected in edit mode. If an incorrect security code is entered the display will revert to parameter view mode.

To lock the user security again, set Pr **11.44** (**SE14, 0.35**) to Loc and press the M reset button.

2.7.4 Disabling user security

Unlock the previously set security code as detailed above. Set Pr **11.30** to 0 and press the M button. The user security has now been disabled, and will not have to be unlocked each time the drive is powered up to allow read / write access to the parameters.

2.8 Alarm and trip display

An alarm can flash alternately with the data displayed on the 2nd row when one of the following conditions occur. If action is not taken to eliminate the alarms except "Auto tune" and "PLC", the drive may eventually trip. Alarms flash once every 640 ms except "PLC" which flashes once every 10 s. Alarms are not displayed when a parameter is being edited.

Alarm string	Alarm condition
OVLd	Motor overload (Pr **4.19** > 75 % and the drive output current > Pr **5.07** {**SE07, 0.28**})
hot	Heatsink alarm is active
Autotune	Autotune in progress
PLC	On-board application lite program is running
CLt	Current limit active
S.OV	The suppressor voltage is with in 30 volts of the HF18 trip level. User needs to fit an external suppressor resistor.
S.rS	External suppressor overload. Active when Pr **11.56** is greater than 75 %.
ESt SPd	Estimated speed selected

When a trip occurs the drive switches to status mode and "tr" or "trip" is shown on the 1st row and the trip string flashes on the 2nd row. The read only parameters listed below are frozen with any trip except UV trip until the trip is cleared. For a list of the possible trip strings see Pr **10.20** {**tr01, 0.51**}. Pressing any of the parameter keys changes the mode to the parameter view mode. If the trip is HF01 to HF16 then no key action is recognized.

Menu 0	Parameter	Description	Display
0.36	**1.01**	Speed reference selected	**di01**
	1.02	Pre-skip filter reference	
0.37	**1.03**	Pre-ramp reference	**di02**
0.38	**2.01**	Post ramp reference	**di03**
0.39	**3.01**	Final speed reference	**di04**
0.40	**3.02**	Speed feedback	**di05**
	3.03	Speed error	
0.41	**3.04**	Speed controller output	**di06**
0.43	**4.01**	Current magnitude	**di08**
	5.01	Armature firing angle	
0.45	**5.02**	Armature voltage	**di10**
	5.03	Output power	
	5.04	Estimated speed	
	5.05	Line voltage	
	5.58	Field firing angle	
0.82	**7.01**	Analog input 1	**in02**
0.83	**7.02**	Analog input 2	**in03**
0.84	**7.03**	Analog input 3	**in04**
	10.77	Input frequency	

2.9 Keypad control mode

The drive can be controlled from the keypad if Pr **1.14** (**SE05, 0.26**) is set to 4. The Stop and Run keys automatically become active (the Reverse key may be optionally enabled with Pr **6.13**). The speed reference is defined by Pr **1.17**. This is a read only parameter that can only be adjusted in status mode by pressing the Up or Down keys. If keypad control mode is selected, then pressing the Up or Down keys in status mode will cause the drive to automatically display the keypad reference and adjust it in the relevant direction. This can be done whether the drive is disabled or running. If the Up or Down keys are held the rate of change of keypad reference increases with time.

2.10 Drive reset

A drive reset is required to: reset the drive from a trip (except some “Hfxx” trips which cannot be reset); and other functions as defined in Chapter 3 *Parameter x.00* on page 15. A reset can be performed in four ways:

1. Stop key: If the drive has been set up such that the stop key is not operative then the key has a drive reset function only. When the stop function of the stop key is enabled, a reset is initiated while the drive is running by holding the Run key and then pressing the Stop key. When the drive is not running the Stop key will always reset the drive.
2. The drive resets after a 0 to 1 transition of the drive reset parameter (Pr **10.33**). A digital input can be programmed to change this parameter.
3. Serial comms, fieldbus or applications Solutions Module: Drive reset is triggered by a value of 100 being written to the User trip parameter (Pr **10.38**).

If the drive trips EEF (internal EEPROM error) then it is not possible to reset the drive using the normal reset methods described above. 1233 or 1244 must be entered into Pr **x.00** before the drive can be reset. Default parameters are loaded after an EEF trip, and so the parameters should be reprogrammed as required and saved in EEPROM.

If the drive is reset after a trip from any source other than the Stop key, the drive restarts immediately, if:

1. A non-latching sequencer is used with the enable active and one of run forward, run reverse or run active
2. A latching sequencer is used if the enable and stop\ are active and one of run forward, run reverse or run is active.

If the drive is reset with the Stop key the drive does not restart until a not active to active edge occurs on run forward, run reverse or run.

2.11 Second motor parameters

An alternative set of motor parameters are held in menu 21 which can be selected by Pr **11.45**. When the alternative parameter set is being used by the drive the decimal point after the right hand digit in the 1st row is on.

2.12 Special display functions

The following special display functions are used.

1. If the second motor map is being used the decimal point second from the right of the first row is on.
2. When parameters are saved to a SMARTCARD the right-most decimal point on the first row flashes for 2 seconds.

During power up one or more of the following actions may be required. Each action may take several seconds, and so special display strings are shown.

Display string	Action
boot	If a SMARTCARD is present with Pr **11.42** (**SE09, 0.30**) set to boot the parameters from the card must be transferred to the drive EEPROM.
card	If the drive is in auto or boot mode Pr **11.42** (**SE09, 0.30** set to 3 or 4) the drive ensures that the data on the card is consistent with the drive by writing to the card.
loading	It may be necessary for a Solutions Module to transfer parameter information from the drive. This is only carried out if the parameter information held by the Solutions Module is for a different drive software version. The drive allows up to 5 seconds for this process.
nOAct	No Action

3 Parameter x.00

Parameter **x.00** is available in all menus and has the following functions.

Value	String	Action
0	No Act	No action
1	SAUE	Save parameters
2	rEAd 1*	Transfer SMARTCARD data block 1 to the drive
3	PrOg 1*	Transfer drive parameters as difference from default to SMARTCARD block number 1
4	rEAd 2*	Transfer SMARTCARD data block 2 to the drive
5	PrOg 2*	Transfer drive parameters as difference from default to SMARTCARD block number 2
6	rEAd 3*	Transfer SMARTCARD data block 3 to the drive
7	PrOg 3*	Transfer drive parameters as difference from default to SMARTCARD block number 3
8	diS.diFF	Display non-default values only
9	diS.dESt	Display destination parameters only
10	Eur	Load European defaults
11	USA	Load USA defaults
12	rES OP	Reset all Solution Modules
1000	1000	Save parameters
1070	1070	Reset all Solution Modules
1233	1233	Load European defaults
1244	1244	Load USA defaults
1255	1255	Load European defaults (excluding menus 15 to 20)
1256	1256	Load USA defaults (excluding menus 15 to 20)
2001	2001*	Transfer drive parameter to a card and create a bootable difference from default SMARTCARD block with data block number 1 and clear parameter 11.42. If data block 1 exists it is over written.
3yyy	3yyy*	Transfer drive parameters to SMARTCARD block number yyy
4yyy	4yyy*	Transfer drive parameters as difference from default to SMARTCARD block number yyy
5yyy	5yyy*	Transfer Onboard Applications Lite ladder program to SMARTCARD block number yyy
6yyy	6yyy*	Transfer SMARTCARD data block yyy to the drive
7yyy	7yyy*	Erase SMARTCARD data block yyy
8yyy	8yyy*	Compare drive data with SMARTCARD block yyy
9555	9555*	Clear SMARTCARD warning suppression flag
9666	9666*	Set SMARTCARD warning suppression flag
9777	9777*	Clear SMARTCARD read-only flag
9888	9888*	Set SMARTCARD read-only flag
9999	9999*	Erase SMARTCARD
12000**	12000**	Display non-default values only
12001**	12001**	Display destination parameters only

*These functions do not require a drive reset to become active. All other functions require a drive reset.

3.1 Parameter x.00 reset

When an action is started by setting Pr **x.00** to one of the above values and initiating a drive reset this parameter is cleared when the action is completed successfully. If the action is not started, e.g. because the drive is enabled and an attempt is made to load defaults, etc., Pr **x.00** is not cleared and no trip is produced. If the action is started and then fails for some reason a trip is always produced and Pr **x.00** is not cleared.

It should be noted that parameter saves etc. can also be initiated with the copying parameter (Pr **11.42** (**SE09**, **0.30**)). If actions that can be initiated by either parameter are started and then completed successfully Pr **x.00** is cleared and Pr **11.42** (**SE09**, **0.30**) is cleared if it has a value of less than 3.

It should be noted that there could be some conflict between the actions of Pr **x.00** and Pr **11.42** (**SE09**, **0.30**) *Parameter copying* when the drive is reset. If Pr **11.42** (**SE09**, **0.30**) has a value of 1 or 2 and a valid action is required from the value of Pr **x.00** then only the action required by Pr **x.00** is performed. Pr **x.00** and Pr **11.42** (**SE09**, **0.30**) are then reset to zero. If Pr **11.42** (**SE09**, **0.30**) has a value of 3 or 4 it will operate correctly causing parameters to be save to a SMARTCARD each time a parameter save is performed.

3.2 Saving parameters in drive EEPROM

Drive parameters are saved to drive EEPROM by setting Pr **x.00** to save and initiating a drive reset. In addition to user save parameters. power down save parameters are also saved by these actions and by changing drive mode, but not by any other actions that result in parameters being saved to drive EEPROM (i.e. loading defaults). Power down save parameters are not saved at power down unless the drive is supplied from a normal line power supply, and so this gives the user the option of saving these parameters when required.

When the parameter save is complete Pr **x.00** is reset to zero by the drive. Care should be taken when saving parameters because this action can take between 400 ms and several seconds depending on how many changes are stored in the EEPROM. If the drive is powered down during a parameter save, it is possible that data may be lost.

When the drive is operating from a normal line power supply then it will stay active for a short time after the power is removed, however, if the drive is being powered from a 24 V control supply, or it is being operated from a low voltage battery supply, the drive will power down very quickly after the supply is removed. The drive provides two features to reduce the risk of data loss when the drive is powered down.

1. If Pr **x.00** is set to save a parameter save is only initiated on drive reset if the drive is supplied from a normal line power supply (Pr **10.16** = 0 and Pr **6.44** = 0).
2. Two banks of arrays are provided in EEPROM to store the data. When a parameter save is initiated the data is stored in a new bank and only when the data store is complete does the new bank become active. If the power is removed before the parameter save is complete a SAVE.Er trip (user save parameter save error) or PSAVE.Er trip (power down save parameter save error) will be produced when the drive is powered up again indicating that the drive has reverted to the data that was saved prior to the last parameter save.

The second feature will significantly reduce the possibility of completely invalidating all saved data, which would result in an EEF trip on the next power-up. However the following points should be noted:

1. If the power is removed during a parameter save the current data that is being saved to the EEPROM that is different from the last data saved in the EEPROM will be lost and SAVE.Er or PSAVE.Er trip will occur on power-up.
2. This feature does not apply when user save parameters are saved automatically by adjusting the values in menu 0 with an LED keypad. However, the time taken to save parameters in this way is very short, and is unlikely to cause data loss if the power is removed after the parameter has been changed. It should be noted that any parameter changes made in this way are included in the currently active bank in the EEPROM, so that if the power is removed during a subsequent save initiated via Pr **x.00** that results in an SAVE.Er trip, the changes made via menu 0 will be retained and not lost.
3. User save parameters are saved to drive EEPROM after a transfer of data from an electronic nameplate in an encoder.
4. User save parameters are saved to drive EEPROM after a transfer of data from a SMARTCARD.
5. This feature is not provided for data saved to a SMARTCARD, and so it is possible to corrupt the data files on a SMARTCARD if the power is removed when data is being transferred to the card.
6. User save parameters are saved to drive EEPROM after defaults are loaded.

7. When the drive mode is changed all data in the EEPROM is deleted and then restored with the defaults for the new mode. If the power is removed during a change of drive mode, an EEF trip is likely to occur on the next power-up. After a change of drive mode the power down save parameters are also saved. As these parameters are not saved if the power is removed unless the drive is supplied with a normal line power supply, this ensures that the power down save parameters are always stored correctly for the new drive mode. The first time parameters are saved after the change of drive mode the save will take slightly longer than a normal parameter save.
8. When an Solutions Module is changed for a different type in a slot, or a module is inserted when one was not present previously or a module is removed the EEPROM is forced to re-initialise itself on the next parameter saves. On the first parameter save one bank is cleared and then written and on the next parameter save the other bank is cleared and rewritten. Each of these parameter saves takes slightly longer than a normal parameter save.

3.3 Loading defaults

When defaults are loaded the user save parameters are automatically saved to the drive EEPROM in all modes. Standard defaults are loaded by setting Eur or USA in Pr **x.00** performing a drive reset.

When the drive is a single quadrant drive the following parameters are different from European defaults.

Pr	Description	Default
1.10	Bipolar reference enable	0
5.22	Quadrant 2 enable	0
5.24	Quadrant 4 enable	0

3.4 Differences between European and USA defaults

Pr	Description	Default
2.06	S ramp enable	Eur: OFF (0), USA: On (1)
3.51	Tachometer voltage rating **(Fb02, 0.72)**	Eur: 60.00, USA: 50.00
5.09, **21.09**	Armature rated voltage **(SE06, 0.27)**	480 V drive Eur: 440, USA:500
5.28	Field weakening compensation disable	Eur: OFF (0), USA On (1)
5.59, **21.08**	Back emf set point	480 V drive Eur: 440, USA:500
5.65	Economy timeout	Eur: OFF (0), USA: On (1)
5.70, **21.24**	Rated field current **(SE10, 0.31)**	Size 1: Eur: 2.00, USA: 8.00 Size 2A & B Eur: 3.00, USA: 20.00 Size 2C & D Eur: 5.00, USA 20.00
5.73, **21.23**	Rated field voltage **(SE11, 0.32)**	Eur: 360, USA: 300
5.75	Field voltage mode	Eur: OFF (0), USA: On (1)
7.15	Analog input 3 mode **(in01, 0.81)**	Eur: th (8), USA: VOLt (6)

3.5 SMARTCARD transfers

Drive parameters, setup macros and internal ladder programs can be transferred to/from SMARTCARDs. See Pr **11.36** to Pr **11.40**.

3.6 Display non-default values or destination parameters

If a diS.diFF is selected in Pr **x.00**, then only parameters that are different from the last defaults loaded and Pr **x.00** are displayed. If diS.dESt is selected in Pr **x.00**, then only destination parameters are displayed. This function is provided to aid locating destination clashes if a dESt trip occurs.

4 Parameter description format

The following sections provide descriptions for the advanced parameter set. Each parameter displays the following information block as shown below.

Typical example parameter

1.14	**Reference selector**															
Coding	Bit	SP	FI	DE	Txt	VM	DP	ND	RA	NC	NV	PT	US	RW	BU	PS
					1								1	1	1	
Range	0 to 6															
Default	0 (A1.A2)															
Second motor parameter	Pr **21.03**															
Update rate	4 ms read															

The top row gives the menu.parameter number and the parameter name. The other rows give the following information.

Coding

NOTE

This guide will show all bit parameters (with the Bit coding), as having a parameter range of "0 to 1", and a default value of either "0" or "1". This reflects the value seen through serial communications. The bit parameters will be displayed on the SM-Keypad or SM-Keypad Plus (if used) as being "OFF" or "On" ("OFF"= 0, "On" = 1).

The coding defines the attributes of the parameter as follows:

Coding	Attribute
Bit	1 bit parameter
SP	Spare: not used
FI	Filtered: some parameters which can have rapidly changing values are filtered when displayed on the drive keypad for easy viewing.
DE	Destination: indicates that this parameter can be a destination parameter.
Txt	Text: the parameter uses text strings instead of numbers.
VM	Variable maximum: the maximum of this parameter can vary.
DP	Decimal place: indicates the number of decimal places used by this parameter.
ND	No default: when defaults are loaded (except when the drive is manufactured or on EEPROM failure) this parameter is not modified.
RA	Rating dependent: this parameter is likely to have different values and ranges with drives of different voltage and current ratings. Parameters with this attribute will not be transferred to the destination drive by SMARTCARDs when the rating of the destination drive is different from the source drive and the file is a parameter file.
NC	Not copied: not transferred to or from SMARTCARDs during copying.
NV	Not visible: not visible on the keypad.
PT	Protected: cannot be used as a destination.
US	User save: saved in drive EEPROM when the user initiates a parameter save.
RW	Read/write: can be written by the user.
BU	Bit default one/unsigned: Bit parameters with this flag set to one have a default of one (all other bit parameters have a default of zero. Non-bit parameters are unipolar if this flag is one.
PS	Power-down save: parameter automatically saved in drive EEPROM when the under volts (UV) trip occurs.

4.1 Parameter ranges and variable maximums:

The two values provided define the minimum and maximum values for the given parameter. In some cases the parameter range is variable and dependant on either:

- other parameters,
- the drive rating,
- or a combination of these.

The values given in Table 4-1 are the variable maximums used in the drive.

Table 4-1 Definition of parameter ranges & variable maximums

Maximum	Definition
MAX_SPEED_REF [10000.0 rpm]	**Maximum speed reference** If Pr **1.08** = 0: MAX_SPEED_REF = Pr **1.06** (**SE02, 0.23**) If Pr **1.08** = 1: MAX_SPEED_REF is Pr **1.06** (**SE02, 0.23**) or – Pr **1.07** (**SE01, 0.22**) whichever is the largest (If the second motor map is selected Pr **21.01** is used instead of Pr **1.06** (**SE02, 0.23**) and Pr **21.02** instead of Pr **1.07** (**SE01, 0.22**))
SPEED_LIMIT_MAX [10000.0 rpm]	**Maximum applied to speed reference limits** A maximum limit may be applied to the speed reference to prevent the nominal encoder frequency from exceeding 500 kHz. The maximum is defined by SPEED_LIMIT_MAX (in rpm) = 500 kHz x 60 / ELPR = 3.0 x 10^7 / ELPR subject to an absolute maximum of 10,000 rpm. ELPR is equivalent encoder lines per revolution and is the number of lines that would be produced by a quadrature encoder. Quadrature encoder ELPR = number of lines per revolution F and D encoder ELPR = number of lines per revolution / 2 This maximum is defined by the device selected with the speed feedback selector (Pr **3.26** (**Fb01, 0.71**)) and the ELPR set for the position feedback device.
SPEED_MAX [10000.0 rpm]	**Maximum speed** This maximum is used for some speed related parameters in menu 3. To allow headroom for overshoot etc. the maximum speed is twice the maximum speed reference. SPEED_MAX = 2 x MAX_SPEED_REF

MAX_RAMP_RATE
MAX_RAMP_RATE_M2
[3200.000]
	Maximum ramp rate
	If (Pr **1.06** (**SE02, 0.23**) [Pr **21.01**] >= 1000 and Pr **2.39** = 0) or Pr **2.39** >= 1000 then
	MAX_RAMP_RATE = 3200.000
	Else if Pr **2.39** = 0
	MAX_RAMP_RATE = 3200 * Pr **1.06** (**SE02, 0.23**) [Pr **21.01**] / 1000.0
	Else
	MAX_RAMP_RATE = 3200 * Pr **2.39** / 1000.0
	End if

RATED_CURRENT_MAX [9999.99 A]	**Maximum motor rated current**
DRIVE_CURRENT_MAX [9999.99 A]	**Maximum drive current** The maximum drive current is the current at the over current trip level and is given by: DRIVE_CURRENT_MAX = RATED_CURRENT_MAX x 2
MOTOR1_CURRENT_LIMIT_MAX [1000.0 %]	**Maximum current limit settings for motor map 1** This maximum current limit setting is the maximum applied to the current limit parameters in motor map 1. See introduction to Menu 4 for the definition.
MOTOR2_CURRENT_LIMIT_MAX [1000.0 %]	**Maximum current limit settings for motor map 2** This maximum current limit setting is the maximum applied to the current limit parameters in motor map 2. See introduction to Menu 4 for the definition.
TORQUE_PROD_CURRENT_MAX [1000.0 %]	**Maximum torque producing current** This is used as a maximum for torque and torque producing current parameters. It is MOTOR1_CURRENT_LIMIT_MAX or MOTOR2_CURRENT_LIMIT_MAX depending on which motor map is currently active.
USER_CURRENT_MAX [1000.0 %]	**Current parameter limit selected by the user** The user can select a maximum for Pr **4.08** (torque reference) and Pr **4.20** (percentage load) to give suitable scaling for analog I/O with Pr **4.24**. This maximum is subject to a limit of CURRENT_LIMIT_MAX. USER_CURRENT_MAX = Pr **4.24**
ARMATURE_VOLTAGE_MAX [1025]	**Maximum armature voltage** Vac x ($\sqrt{2}$ x 3 / π) 480 +10 % drive: 720 575 +10 % drive: 860 690 +10 % drive: 1025 **NOTE** For 4 quadrant drives maximum armature voltage = Vac x 1.15

Maximum	Definition
QUADRANT_MAX	**Quadrant maximum** 0 for a 2 quadrant drive. 1 for a 4 quadrant drive.
POWER_MAX [9999.99 kW]	**Maximum power in kW** The maximum power has been chosen to allow for the maximum power that can be output by the drive with maximum DC output voltage and maximum controlled current. Therefore: POWER_MAX = ARMATURE_VOLTAGE_MAX x DRIVE_CURRENT_MAX
FIELD_CURRENT_SET_MAX	**Maximum field current** Size 1 =8 A. Size 2 = 20 A.

The values given in square brackets indicate the absolute maximum value allowed for the variable maximum.

4.1.1 Default

The default values given are the standard drive defaults which are loaded after a drive reset with Eur or USA in Pr **x.00**.

4.1.2 Second motor parameter

Some parameters have an equivalent second motor value that can be used as an alternative when the second motor is selected with Pr **11.45**. Menu 21 contains all the second motor parameters. In this menu the parameter specifications include the location of the normal motor parameter which is being duplicated.

4.1.3 Update rate

Defines the rate at which the parameter data is written by the drive (write) or read and acted upon by the drive (read). Where background update rate is specified, the update time depends on the drive processor load. Generally the update time is between 2 ms and 30 ms, however, the update time is significantly extended when loading defaults, changing drive mode, transferring data to/from a SMARTCARD, or transferring blocks of parameters or large CMP data blocks to/from the drive (not a Solutions Module) via the drive serial comms port.

4.2 Sources and destinations

4.2.1 Sources

Some functions have source pointer parameters, i.e. drive outputs, PID controller etc. The source pointer parameter range is Pr **0.00** to Pr **22.99** The source pointer is set up to point to a parameter, which supplies the information to control the source and this is referred to as the source data parameter. For example, Pr **7.19** is the source pointer parameter for analog output 1. If Pr **7.19** is set to a value of 18.11, then Pr **18.11** is the source data parameter, and as the value of Pr **18.11** is modified the analog output level is changed.

1. If the parameter number in the source pointer parameter does not exist the input is taken as zero.
2. If the source is not a bit type source (i.e. not a digital output etc.) then the source level is defined by (source data value x 100 %) / source data parameter maximum. Generally the result is rounded down to the nearest unit, but other rounding effects may occur depending on the internal scaling of the particular source function.
3. If the source is a bit, i.e. a digital output, and the source data parameter is a bit parameter then the input to the source function follows the value of the source data parameter.
4. If the source is a bit, i.e. a digital output, and the source data parameter is not a bit parameter the source input is zero if the source data value is less than source data parameter maximum / 2 rounded down to the nearest unit. The source input is one if the source data value is greater than or equal to source data parameter maximum / 2 rounded down to the nearest unit. For example if the source pointer parameter is set to 18.11, which has a maximum of 32767, the source input is zero if the source data value is less than 16383 and one if it is greater than this.

4.2.2 Destinations

Some functions have destination pointer parameters, i.e. drive inputs, etc. The destination pointer parameter range is P **0.00** to Pr **22.99**. The destination pointer parameter is set up to point to a parameter, which receives information from the function referred to as the destination parameter.

1. If the parameter number in the destination pointer parameter does not exist then the output value has no effect.
2. If the destination parameter is protected then the output value has no effect.
3. If the function output is a bit value (i.e. a digital input) the destination parameter value does not operate in the same way as a source described above, but is always either 0 or 1 depending on the state of the function output whether the destination parameter is a bit parameter or not.
4. If the function output is not a bit value (i.e. analog input) and the destination parameter is not a bit parameter, the destination value is given by (function output x destination parameter maximum) / 100 %. Generally the result is rounded down to the nearest unit, but other rounding effects may occur depending on the internal scaling of the particular source function (rounded down to nearest unit). Pr **1.36** and Pr **1.37** are a special case. The scaling shown in the description of parameter Pr **1.08** is used when any non-bit type quantity is routed to these parameters.
5. If the function output is not a bit value and the destination parameter is a bit value, the destination value is 0 if the function output is less than 50 % of its maximum value, otherwise it is 1.
6. If more than one destination selector is routed to the same destination, the value of the destination parameter is undefined. The drive checks for this condition where the destinations are defined in any menu except menus 15 to 17. If a conflict occurs a dESt trip occurs that cannot be reset until the conflict is resolved.

4.2.3 Sources and destinations

1. Bit and non-bit parameters may be connected to each other as sources or destinations. The scaling is as described previously.
2. All new source and destination routing only changes to new setup locations when the drive is reset.
3. When a destination pointer parameter within the drive or a dumb Solutions Module (SM-Resolver, SM-Encoder Plus, SM-I/O plus) is changed the old destination is written to zero, unless the destination change is the result of loading defaults or transferring parameters from a SMARTCARD. When defaults are loaded the old destination is set to its default value. When parameters are loaded from a SMARTCARD the old destination retains its old value unless a SMARTCARD value is written to it.

4.3 Update rates

Update rates are given for every parameter in the header table as shown below:

3.03	**Speed error**															
Coding	Bit	SP	FI	DE	Txt	VM	DP	ND	RA	NC	NV	PT	US	RW	BU	PS
			1			1	1	1		1		1				
Range	±SPEED_MAX rpm															
Update rate	4 ms write															

Some parameters have an increased update in special circumstances.

4.3.1 Speed reference update rate

The normal update rate for the speed references (via menu 1) is 4 ms, however it is possible to reduce the sample time to 250 µs by selecting the reference from particular sources. The fast update rate is only possible provided the conditions given below are met. (Note: high speed updating is not provided for speed references).

Analog input references (not including I/O expansion Solutions Module)

1. The reference must be derived via Pr **1.36** or Pr **1.37**
2. The analog inputs must be in voltage mode with zero offset
3. Bipolar mode must be used or unipolar mode with the minimum speed (Pr **1.07** {**SE01, 0.22**}) set to zero
4. No skip bands are enabled, i.e. Pr **1.29**, Pr **1.31** and Pr **1.33** must be zero.
5. The jog and velocity feed-forward references must not be enabled.

Applications and fieldbus Solutions Modules

Pr **91.02** must be used to define the speed reference (this parameter is only visible from the Solutions Modules). Any value written to Pr **91.02** should be automatically mapped into preset Pr **1.21** by the Solutions Module.

When fast updating is used the scaling is performed by a simple multiplication. The scale factor used for the multiplication cannot exactly duplicate the scaling for the two stage conversion (i.e. conversion in menu 7 to a percentage of full scale, and conversion to 0.1 rpm units) used when high speed updating is not in operation. Therefore the absolute scaling of the analog inputs varies slightly between normal and high speed updating. The amount of difference depends on the maximum speed, user scaling in menu 7, and the analog input 1 the filter time. The worst case difference for analog input 1 is 0.12 % of full scale, and for analog inputs 2 and 3 the difference is less than 0.12 % with a maximum speed of 50 rpm or more. Typical differences (1500 rpm maximum speed, menu 7 scaling of 1.000, analog input 1 filter of 4 ms) are 0.015 % for analog input 1 and 0.004 % for analog inputs 2 and 3.

4.3.2 Hard speed reference update rate

The normal update rate for the hard speed reference is 4 ms, however it is possible to reduce the sample time to 250 µs by selecting the reference from particular sources. The fast update rate is only possible provided the conditions given below are met.

Analog inputs (not including I/O expansion Solutions Module)

The analog inputs must be in voltage mode with zero offset

Limitations are the same as for the references via menu 1 described above.

Applications and fieldbus Solutions Modules

For faster update rate Pr **91.03** must be used (this parameter is only visible from the Solutions Modules). Any value written to Pr **91.03** is automatically mapped into the hard speed reference Pr **3.22**.

Encoder reference

It is possible to use the drive encoder as the source for the hard speed reference. To do this the drive encoder reference destination (Pr **3.46**) should be routed to the hard speed reference parameter. If, and only if, the maximum drive encoder reference (Pr **3.43**) is set to the same value as the maximum reference value (MAX_SPEED_REF), and the scaling (Pr **3.44**) is 1.000, the drive takes the encoder pulses directly. This gives a form of reference slaving where the integral term in the speed controller accumulates all pulses from the reference and tries to match them to the feedback from the motor encoder. Pulses are lost if the reference reaches a minimum or maximum limit including zero speed in unipolar mode. The reference is sampled every 250 µs. It is possible to apply scaling even in this high speed update mode by changing the number of encoder lines per revolution. It is also possible to use this high speed update mode with some position feedback category Solutions Modules (see description for the appropriate Solutions Module.)

4.3.3 Torque reference update rate

The normal update rate for the torque reference (Pr **4.08**) is 4 ms, however it is possible to reduce the sample time to 250 µs by selecting the reference from particular sources.The fast update rate is only possible provided the conditions given below are met.

Analog inputs 2 or 3 on the drive

The analog inputs must be in voltage mode with zero offset.

5 Advanced parameter descriptions

5.1 Overview

Table 5-1 Menu descriptions

Menu	Function
1	Speed reference selection, limits and filters
2	Ramps
3	Speed feedback and speed control
4	Torque and current control
5	Motor and field control
6	Sequencer and clock
7	Analog I/O
8	Digital I/O
9	Programmable logic and motorized pot
10	Drive status and trip information
11	General drive setup
12	Threshold detectors, variable selectors and brake control function
13	Position control
14	User PID controller
15	Slot 1 Solutions Module menu
16	Slot 2 Solutions Module menu
17	Slot 3 Solutions Module menu
18	User application menu 1 (saved in drive EEPROM)
19	User application menu 2 (saved in drive EEPROM)
20	User application menu 3 (not saved in drive EEPROM)
21	Second motor parameters
22	Additional Menu 0 set up
23	Header selections

Default abbreviations:

Eur> European default value
USA> USA default value

NOTE

Parameter numbers shown in brackets {...} are the equivalent sub block/ Menu 0 parameters.

In some cases, the function or range of a parameter is affected by the setting of another parameter; the information in the lists relates to the default condition of such parameters.

Table 5-2 gives a full key of the coding which appears in the following parameter tables.

Table 5-2 Key to parameter coding

Coding	Attribute
{X.XX}	Copied Menu 0 or advanced parameter
Bit	1 bit parameter: ‘On’ or ‘OFF’ on the display
Bi	Bipolar parameter
Uni	Unipolar parameter
Txt	Text: the parameter uses text strings instead of numbers.
SP	Spare: not used
FI	Filtered: some parameters which can have rapidly changing values are filtered when displayed on the drive keypad for easy viewing.
DE	Destination pointer parameter: This parameter can be used to set up the location (i.e. menu/parameter number) where the destination data is to be routed.
VM	Variable maximum: the maximum of this parameter can vary.
DP	Decimal place: indicates the number of decimal places used by this parameter.
ND	No default: when defaults are loaded (except when the drive is manufactured or on EEPROM failure) this parameter is not modified.
RA	Rating dependant: this parameter is likely to have different values and ranges with drives of different voltage and current ratings. Parameters with this attribute will not be transferred to the destination drive by a SMARTCARD when the rating of the destination drive is different from the source drive if the drive voltage ratings are different or the file is a parameter file. However, the value will be transferred if only the current rating is different and the file is a differences from default type file.
NC	Not copied: not transferred to or from SMARTCARD during copying.
NV	Not visible: not visible on the keypad.
PT	Protected: cannot be used as a destination.
US	User save: saved in drive EEPROM when the user initiates a parameter save.
RW	Read/write: can be written by the user.
RO	Read only: can only be read by the user
BU	Bit default one/unsigned: Bit parameters with this flag set to one have a default of one (all other bit parameters have a default of zero. Non-bit parameters are unipolar if this flag is one.
PS	Power-down save: parameter automatically saved in drive EEPROM when the under volts (UV) trip occurs. Power-down save parameters are also saved in the drive when the user initiates a parameter save.

5.2 Menu 1: Speed reference

Menu 1 controls the main reference selection.

Figure 5-1 Menu 1 logic diagram

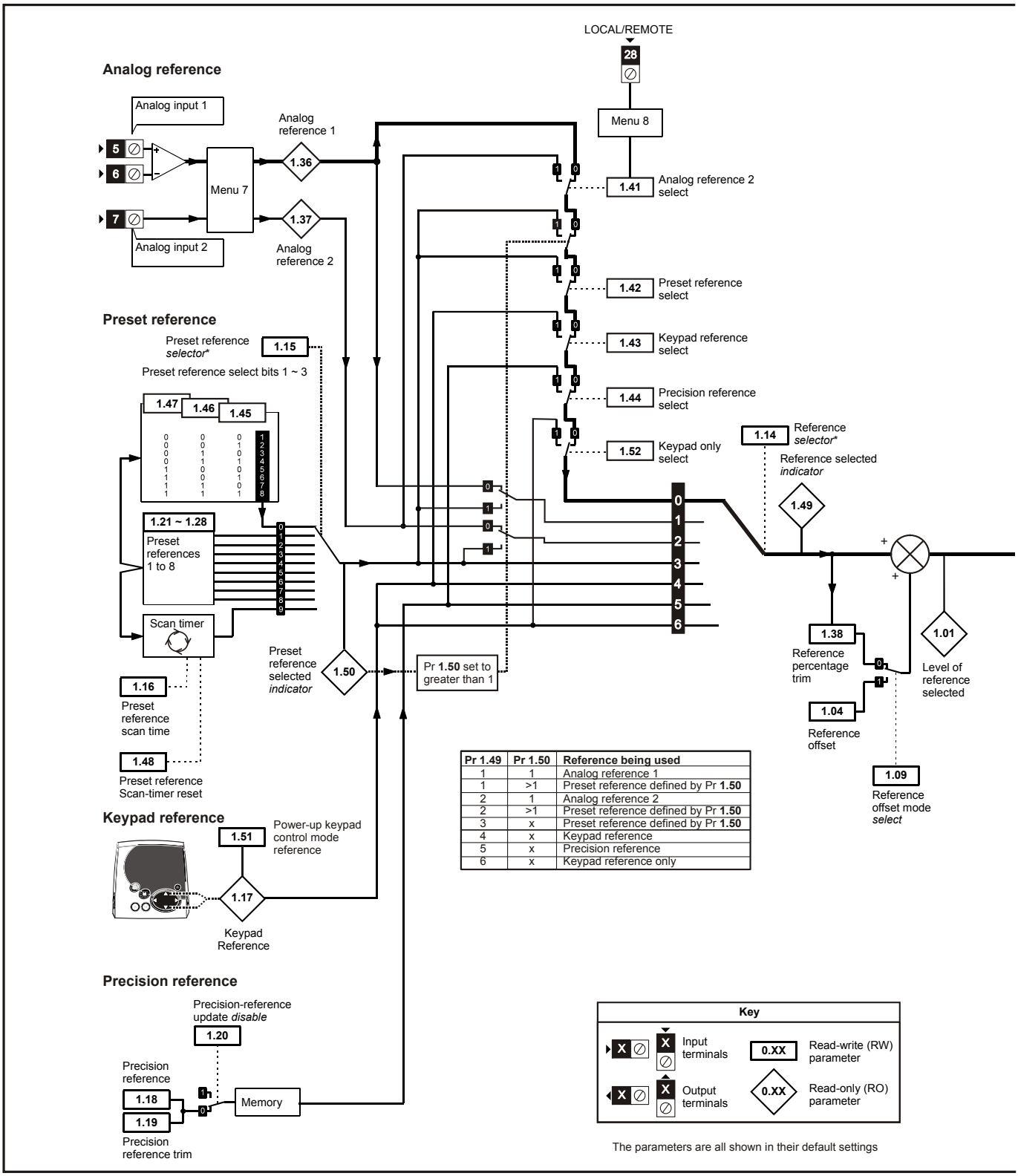

Pr 1.49	Pr 1.50	Reference being used
1	1	Analog reference 1
1	>1	Preset reference defined by Pr **1.50**
2	1	Analog reference 2
2	>1	Preset reference defined by Pr **1.50**
3	x	Preset reference defined by Pr **1.50**
4	x	Keypad reference
5	x	Precision reference
6	x	Keypad reference only

*Refer to Pr **1.14** (**SE05**, **0.26**) on page 27.

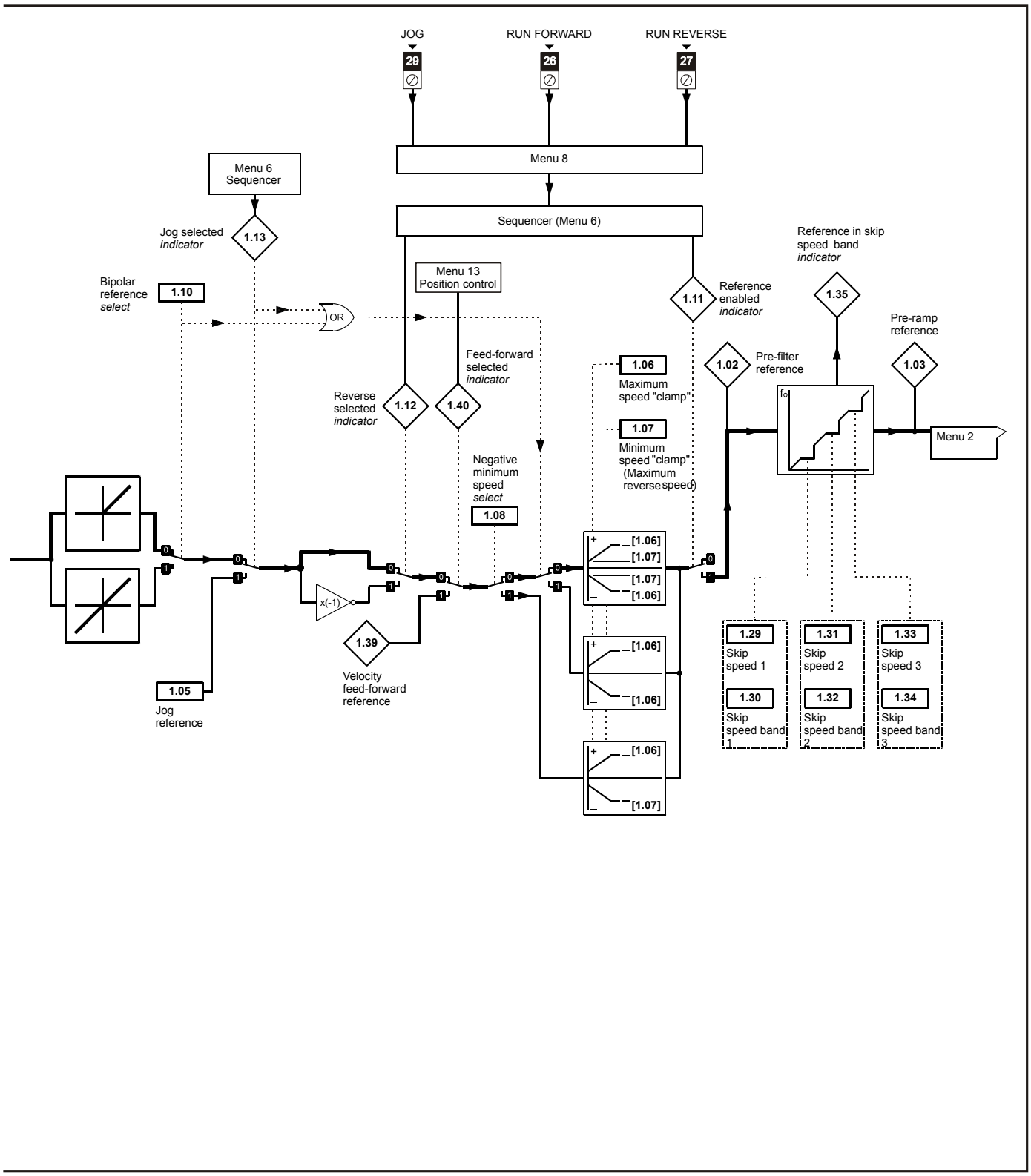
JOG
29
RUN FORWARD
26
RUN REVERSE
27
Menu 8
Sequencer (Menu 6)
Menu 6 Sequencer
Jog selected indicator
1.13
Bipolar reference select
1.10
OR
Menu 13 Position control
1.11
Reference enabled indicator
Reference in skip speed band indicator
1.35
Pre-ramp reference
1.03
Menu 2
1.02
Pre-filter reference
Feed-forward selected indicator
1.40
Reverse selected indicator
1.12
1.06
Maximum speed "clamp"
1.07
Minimum speed "clamp" (Maximum reverse speed)
Negative minimum speed select
1.08
[1.06]
[1.07]
[1.07]
[1.06]
[1.06]
[1.06]
[1.06]
[1.07]
x(-1)
1.39
Velocity feed-forward reference
1.05
Jog reference
1.29
Skip speed 1
1.30
Skip speed band 1
1.31
Skip speed 2
1.32
Skip speed band 2
1.33
Skip speed 3
1.34
Skip speed band 3

1.01 {di01, 0.36}	**Speed reference selected**															
Coding	Bit	SP	FI	DE	Txt	VM	DP	ND	RA	NC	NV	PT	US	RW	BU	PS
						1	1	1		1		1				
Range	±MAX_SPEED_REF rpm															
Update rate	4 ms write															

1.02	**Pre-skip filter reference**															
Coding	Bit	SP	FI	DE	Txt	VM	DP	ND	RA	NC	NV	PT	US	RW	BU	PS
						1	1	1		1		1				
Range	±MAX_SPEED_REF rpm															
Update rate	4 ms write															

1.03 {di02, 0.37}	**Pre-ramp reference**															
Coding	Bit	SP	FI	DE	Txt	VM	DP	ND	RA	NC	NV	PT	US	RW	BU	PS
						1	1	1		1		1				
Range	±MAX_SPEED_REF rpm															
Update rate	4 ms write															

1.04	**Reference offset**															
Coding	Bit	SP	FI	DE	Txt	VM	DP	ND	RA	NC	NV	PT	US	RW	BU	PS
							1						1	1		
Range	±10,000.0 rpm															
Default	0.0															
Update rate	Background read when precision reference is active 4 ms write otherwise															

See Pr **1.09** on page 26.

1.05	**Jog reference**															
Coding	Bit	SP	FI	DE	Txt	VM	DP	ND	RA	NC	NV	PT	US	RW	BU	PS
							1						1	1	1	
Range	0 to 1,000.0 rpm															
Default	0.0															
Update rate	4 ms read															

Reference used for jogging. See section 5.7 *Menu 6: Sequencer and clock* on page 97 for details on when the jog mode can be activated. The jog reference can be used for relative jogging in digital lock mode (see section 5.14 *Menu 13: Position control* on page 172).

1.06 {SE02, 0.23}	**Maximum reference clamp**															
Coding	Bit	SP	FI	DE	Txt	VM	DP	ND	RA	NC	NV	PT	US	RW	BU	PS
							1						1	1	1	
Range	SPEED_LIMIT_MAX rpm															
Default	1000.0															
Second motor parameter	Pr **21.01**															
Update rate	Background read															

See also Pr **1.07** overleaf.

1.07 {SE01, 0.22}	**Minimum reference clamp**															
Coding	Bit	SP	FI	DE	Txt	VM	DP	ND	RA	NC	NV	PT	US	RW	BU	PS
						1	1					1	1	1		
Range	±SPEED_LIMIT_MAX rpm*															
Default	0.0															
Second motor parameter	Pr **21.02**															
Update rate	Background read															

*The range shown for Pr **1.07** shows the range used for scaling purposes (i.e. for routing to an analog output etc). Further range restrictions are applied as given below.

Pr 1.08 (Neg min ref enable)	**Pr 1.10 (Bipolar mode enable)**	**Range**
0	0	0 to Pr **1.06** {**SE02, 0.23**}
0	1	0
1	0	-SPEED_LIMIT_MAX to 0 rpm
1	1	-SPEED_LIMIT_MAX to 0 rpm

1.08	**Negative minimum reference clamp enable**															
Coding	Bit	SP	FI	DE	Txt	VM	DP	ND	RA	NC	NV	PT	US	RW	BU	PS
	1												1	1		
Default	0															
Update rate	Background read															

The effects of the reference clamps (Pr **1.06** {**SE02, 0.23**} and **1.07** {**SE01, 0.22**}), the negative minimum clamp enable (Pr **1.08**) and the bipolar reference enable parameters are defined below.

The variable maximum limit for reference parameters, MAX_SPEED_REF, is defined as:

If Pr **1.08** = 0: MAX_SPEED_REF = Pr **1.06** {**SE02, 0.23**}
If Pr **1.08**=1: MAX_SPEED_REF is Pr **1.06** {**SE02, 0.23**} or -Pr **1.07** {**SE01, 0.22**} whichever is the largest

(If the second motor map is selected Pr **21.01** is used instead of Pr **1.06** {**SE02, 0.23**} and Pr **21.02** instead of Pr **1.07** {**SE01, 0.22**})

Analog input scaling

The following diagrams show the scaling applied when analog inputs are used to define the reference and are routed via Pr **1.36** or Pr **1.37**.

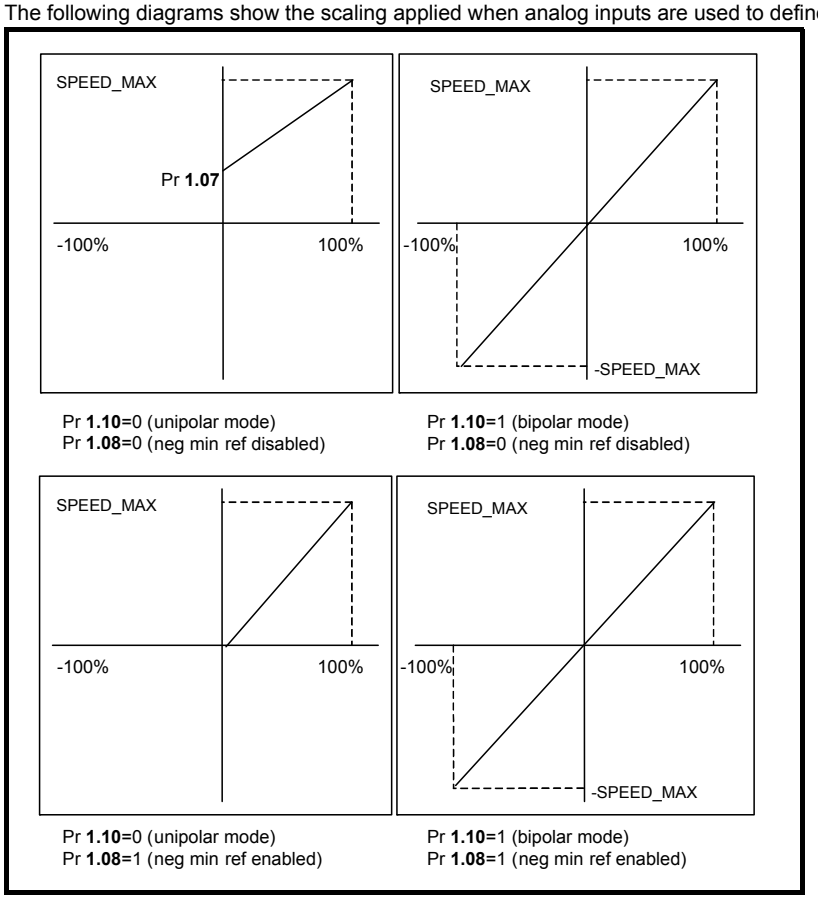

Reference limits

With reference to the block diagram for Menu 1 (Figure 5-1 on page 22) the following table shows the limits applied to the reference by various blocks in the reference system. It should be noted that the minimum limit in the main reference limits block changes when either the jog reference or velocity feed forward references are active. When one of these is active: if Pr **1.08** = 0 the minimum = -Pr **1.06** {**SE02, 0.23**} [-Pr **21.01** for motor map2], if Pr **1.08** = 1 the minimum = -Pr **1.07** {**SE01, 0.22**} [-Pr **21.02** for motor map 2].

	Minimum	Maximum
Keypad control reference (Pr **1.17**)	Unipolar mode: Pr **1.07** {**SE01, 0.22**}, or 0 if Pr **1.07** {**SE01, 0.22**} < 0 Bipolar mode: -MAX_SPEED_REF	MAX_SPEED_REF
Bipolar/unipolar selector	Unipolar mode: Pr **1.07** {**SE01, 0.22**}, or 0 if Pr **1.07** {**SE01, 0.22**} < 0 Bipolar mode: no limit applied	No maximum limit applied
Main reference limits	Neg minimum ref disabled: -Pr **1.06** {**SE02, 0.23**} Neg minimum ref enabled: Pr **1.07** {**SE01, 0.22**}	Pr **1.06** {**SE02, 0.23**}

1.09	**Reference offset select**															
Coding	Bit	SP	FI	DE	Txt	VM	DP	ND	RA	NC	NV	PT	US	RW	BU	PS
	1												1	1		
Default	0															
Update rate	Background read when precision reference is active 4 ms read otherwise															

When this parameter is 0 the reference is given by

Pr **1.01** {**di01, 0.36**} = selected reference x (100 + Pr **1.38**) / 100

and when this parameter is 1 the reference is given by

Pr **1.01** {**di01, 0.36**} = selected reference + Pr **1.04**

1.10	**Bipolar reference enable**															
Coding	Bit	SP	FI	DE	Txt	VM	DP	ND	RA	NC	NV	PT	US	RW	BU	PS
	1												1	1		
Default	0															
Update rate	4 ms read															

See Pr **1.08** on page 25.

1.11 {di11, 0.46}	**Reference enabled indicator**															
1.12 {di12, 0.47}	**Reverse selected indicator**															
1.13 {di13, 0.48}	**Jog selected indicator**															
Coding	Bit	SP	FI	DE	Txt	VM	DP	ND	RA	NC	NV	PT	US	RW	BU	PS
	1							1		1		1				
Update rate	4 ms read															

These parameters are controlled by the drive sequencer as defined in Menu 6. They select the appropriate reference as commanded by the drive logic. Pr **1.11** {**di11, 0.46**} will be active if a run command is given, the drive is enabled and the drive is OK. This parameter can be used as an interlock in a Onboard PLC or SM-Applications program to show that the drive is able to respond to a speed or torque demand.

1.14 {SE05, 0.26}	**Reference selector**															
Coding	Bit	SP	FI	DE	Txt	VM	DP	ND	RA	NC	NV	PT	US	RW	BU	PS
					1								1	1	1	
Range	0 to 6															
Default	0 (A1.A2)															
Second motor parameter	Pr **21.03**															
Update rate	4 ms read															

Pr **1.14** {**SE05, 0.26**} defines how the value of Pr **1.49** is derived as follows:

Value of Pr 1.14 {SE05, 0.26}	**Display String**	**Pr 1.49**
0	A1.A2 (Analog ref 1. Analog ref 2)	*Selected by terminal input
1	A1.Pr (Analog ref 1. Preset speeds)	1
2	A2.Pr (Analog ref 2. Preset speeds)	2
3	Pr (Preset speeds)	3
4	Pad (Keypad reference)	4
5	Prc (Precision reference)	5
6	Pad rEF	6

*Pr **1.41** to Pr **1.44** and Pr **1.52** can be controlled by digital inputs to force the value of Pr **1.49**:

all bits equal to zero gives 1,

Pr **1.41** = 1 then Pr **1.49** = 2
Pr **1.42** = 1 then Pr **1.49** = 3
Pr **1.43** = 1 then Pr **1.49** = 4
Pr **1.44** = 1 then Pr **1.49** = 5
Pr **1.52** = 1 then Pr **1.49** = 6

The bit parameters with lower numbers have priority over those with higher numbers.

Pr **1.49** and Pr **1.50** then define the reference as follows:

Pr 1.49	Pr 1.50	Reference
1	1	Analog reference 1 (Pr **1.36**)
1	>1	Preset defined by Pr **1.50** (Pr **1.21** to Pr **1.28**)
2	1	Analog reference 2 (Pr **1.37**)
2	>1	Preset defined by Pr **1.50** (Pr **1.21** to Pr **1.28**)
3	x	Preset defined by Pr **1.50** (Pr **1.21** to Pr **1.28**)
4	x	Keypad reference (Pr **1.17**)
5	x	Precision reference (Pr **1.18** and Pr **1.19**)
6	x	Keypad reference only

x = any value

Keypad reference

If Keypad reference is selected the drive sequencer is controlled directly by the keypad keys and the keypad reference parameter (Pr **1.17**) is selected. The sequencing bits, Pr **6.30** to Pr **6.34**, have no effect and jog is disabled.

1.15	Preset selector															
Coding	Bit	SP	FI	DE	Txt	VM	DP	ND	RA	NC	NV	PT	US	RW	BU	PS
													1	1	1	
Range	0 to 9															
Default	0															
Update rate	4 ms read															

Pr **1.15** defines how the value of Pr **1.50** is derived as follows:

Value of Pr 1.15	Pr 1.50
0	Selected by terminal input*
1	1
2	2
3	3
4	4
5	5
6	6
7	7
8	8
9	Selected by timer**

*Pr **1.45** to Pr **1.47** can be controlled by digital inputs to define the value of Pr **1.50** as follows:

The presets are selected automatically in turn. Pr **1.16 defines the time between each change.

Pr 1.47	Pr 1.46	Pr 1.45	Pr 1.50
0	0	0	1
0	0	1	2
0	1	0	3
0	1	1	4
1	0	0	5
1	0	1	6
1	1	0	7
1	1	1	8

Pr **1.49** and Pr **1.50** then define the reference as follows:

Pr 1.49	Pr 1.50	Reference
1	1	Analog reference 1 (Pr **1.36**)
1	>1	Preset defined by Pr **1.50** (Pr **1.21** to Pr **1.28**)
2	1	Analog reference 2 (Pr **1.37**)
2	>1	Preset defined by Pr **1.50** (Pr **1.21** to Pr **1.28**)
3	x	Preset defined by Pr **1.50** (Pr **1.21** to Pr **1.28**)
4	x	Keypad reference (Pr **1.17**)
5	x	Precision reference (Pr **1.18** and Pr **1.19**)
6	x	Keypad reference only

1.16	**Preset reference selector timer**															
Coding	Bit	SP	FI	DE	Txt	VM	DP	ND	RA	NC	NV	PT	US	RW	BU	PS
							1						1	1	1	
Range	0 to 400.0 s															
Default	10.0															
Update rate	Background read															

This parameter defines the time between preset reference changes when Pr **1.15** is set to 9. If Pr **1.48** is set to 1 then the preset counter and timer are reset and preset 1 will be selected.

1.17	**Keypad control mode reference**															
Coding	Bit	SP	FI	DE	Txt	VM	DP	ND	RA	NC	NV	PT	US	RW	BU	PS
						1	1			1		1				1
Range	±MAX_SPEED_REF rpm															
Default	0.0															
Update rate	4 ms read															

The drive can be controlled from the keypad if Pr **1.14** {**SE05, 0.26**} is set to 4. The Stop and Run keys automatically become active (the Reverse key may be optionally enabled with Pr **6.13**). The speed reference is defined by Pr **1.17**. This is a read only parameter that can only be adjusted in status mode by pressing the Up or Down keys. If keypad control mode is selected, then pressing the Up or Down keys in status mode will cause the drive to automatically display the keypad reference and adjust it in the relevant direction. This can be done whether the drive is disabled or running. If the Up or Down keys are held the rate of change of keypad reference increases with time. The units used for to display the keypad reference for different modes are given below.

See also Pr **1.51** on page 33 (*Power-up keypad control mode reference*).

1.18	**Precision reference coarse**															
Coding	Bit	SP	FI	DE	Txt	VM	DP	ND	RA	NC	NV	PT	US	RW	BU	PS
						1	1						1	1		
Range	±MAX_SPEED_REF rpm															
Default	0.0															
Update rate	Background read															

See below.

1.19	**Precision reference fine**															
Coding	Bit	SP	FI	DE	Txt	VM	DP	ND	RA	NC	NV	PT	US	RW	BU	PS
							3						1	1	1	
Range	0 - 0.099 rpm															
Default	0.000															
Update rate	Background read															

The speed reference resolution is restricted to 0.1 rpm from normal parameters, but the resolution can be improved by using the precision reference. Pr **1.18** defines the coarse part of reference (either positive or negative) with a resolution of 0.1 rpm and Pr **1.19** defines the fine part of the reference (always positive) with a resolution of 0.001 rpm. The final reference is given by Pr **1.18** + Pr **1.19.** Therefore Pr **1.19** increases positive references away from zero, and decreases negative references towards zero.

1.20	**Precision reference update disable**															
Coding	Bit	SP	FI	DE	Txt	VM	DP	ND	RA	NC	NV	PT	US	RW	BU	PS
	1									1				1		
Default	0															
Update rate	Background read															

When this bit is at 0 the precision reference parameters are read and stored in internal memory. Because the precision reference has to be set in two parameters, this bit is provided to prevent the drive reading the parameters while the reference is being updated. Instead, the drive uses the value stored in memory preventing the possibility of data skew.

1.21	**Preset reference 1**															
1.22	**Preset reference 2**															
1.23	**Preset reference 3**															
1.24	**Preset reference 4**															
1.25	**Preset reference 5**															
1.26	**Preset reference 6**															
1.27	**Preset reference 7**															
1.28	**Preset reference 8**															
Coding	Bit	SP	FI	DE	Txt	VM	DP	ND	RA	NC	NV	PT	US	RW	BU	PS
						1	1						1	1		
Range	±MAX_SPEED_REF rpm															
Default	0.0															
Update rate	4 ms read															

1.29	**Skip reference 1**															
1.31	**Skip reference 2**															
1.33	**Skip reference 3**															
Coding	Bit	SP	FI	DE	Txt	VM	DP	ND	RA	NC	NV	PT	US	RW	BU	PS
													1	1	1	
Range	0 to 10,000 rpm															
Default	0.0															
Update rate	Background read															

See below.

1.30	**Skip reference band 1**															
1.32	**Skip reference band 2**															
1.34	**Skip reference band 3**															
Coding	Bit	SP	FI	DE	Txt	VM	DP	ND	RA	NC	NV	PT	US	RW	BU	PS
													1	1	1	
Range	0 to 250 rpm															
Default	5															
Update rate	Background read															

Three skip references are available to prevent continuous operation at a speed that would cause mechanical resonance. When a skip reference parameter is set to 0 that filter is disabled. The skip reference band parameters define the speed range either side of the programmed skip reference, over which references are rejected. The actual reject band is therefore twice that programmed in these parameters, the skip reference parameters defining the centre of the band. When the selected reference is within a band the lower limit of the band is passed through to the ramps such that reference is always less than demanded.

1.35	**Reference in rejection zone**															
Coding	Bit	SP	FI	DE	Txt	VM	DP	ND	RA	NC	NV	PT	US	RW	BU	PS
	1							1		1		1				
Update rate	4 ms write															

This parameter indicates that the selected reference is within one of the skip reference zones such that the motor speed is not as demanded.

1.36	**Analog reference 1**															
1.37	**Analog reference 2**															
Coding	Bit	SP	FI	DE	Txt	VM	DP	ND	RA	NC	NV	PT	US	RW	BU	PS
						1	1	1		1						
Range	±MAX_SPEED_REF rpm															
Default	0															
Update rate	4 ms write															

Although most parameters can be controlled from analog inputs, these two parameters are a special case in that if an analog input is directed to one of these parameters, the scan rate of that analog input is increased.

These are special parameters when a non-bit type quantity uses these parameters as a destination (not just from analog inputs). The scaling and limiting applied is as described with Pr **1.08** on page 25.

1.38	**Percentage trim**															
Coding	Bit	SP	FI	DE	Txt	VM	DP	ND	RA	NC	NV	PT	US	RW	BU	PS
							2			1				1		
Range	±100.00 %															
Default	0.00															
Update rate	4 ms read															

See Pr **1.09** on page 26.

1.39	**Velocity feed-forward reference**															
Coding	Bit	SP	FI	DE	Txt	VM	DP	ND	RA	NC	NV	PT	US	RW	BU	PS
							1	1		1		1				
Range	±10,000.0 rpm															
Update rate	4 ms read															

This parameter indicates the velocity feed forward reference when position control is used (see section 5.14 *Menu 13: Position control* on page 172).

1.40	**Feed-forward selected**															
Coding	Bit	SP	FI	DE	Txt	VM	DP	ND	RA	NC	NV	PT	US	RW	BU	PS
	1							1		1		1				
Update rate	4 ms write															

This bit indicates that the position controller has selected the velocity feed forward as a reference for the drive

1.41	**Analog reference 2 select**															
1.42	**Preset reference select**															
1.43	**Keypad reference select**															
1.44	**Precision reference select**															
1.45	**Preset reference select bit 1**															
1.46	**Preset reference select bit 2**															
1.47	**Preset reference select bit 3**															
Coding	Bit	SP	FI	DE	Txt	VM	DP	ND	RA	NC	NV	PT	US	RW	BU	PS
	1									1				1		
Default	0															
Update rate	4 ms read															

Pr **1.41** to Pr **1.44** together with Pr **1.52** control Pr **1.49**. The priority order is Pr **1.52** (highest), Pr **1.44,** Pr **1.43**, Pr **1.42**, Pr **1.41** (lowest). If more than one parameter is active, the highest priority takes precedence.

Pr **1.41** = 1 forces Pr **1.49** = 2 (see table in Pr **1.14** on page 27 and Pr **1.15** on page 28)
Pr **1.42** = 1 forces Pr **1.49** = 3 (always selects preset references)
Pr **1.43** = 1 forces Pr **1.49** = 4 (always selects keypad control mode)
Pr **1.44** = 1 forces Pr **1.49** = 5 (always selects precision reference)
Pr **1.52** = 1 forces Pr **1.49** = 6 (Keypad reference only)

Pr **1.45** to Pr **1.47** control Pr **1.50.**

Pr **1.45** controls Pr **1.50** bit 0*
Pr **1.46** controls Pr **1.50** bit 1*
Pr **1.47** controls Pr **1.50** bit 2*

*See the description with Pr **1.14** {**SE05, 0.26**} and Pr **1.15** on page 28 for more information.

1.48	**Preset reference scan timer reset**															
Coding	Bit	SP	FI	DE	Txt	VM	DP	ND	RA	NC	NV	PT	US	RW	BU	PS
	1									1				1		
Default	0															
Update rate	Background read															

When this flag is set the preset timer for auto preset timer mode (Pr **1.15** = 9) is reset and preset 1 is selected. This can be used to start a new sequence of reference selection by a programmable input terminal or function. When this bit is zero the preset selection will follow the timer even when the drive is disabled.

1.49	**Reference selected indicator**															
Coding	Bit	SP	FI	DE	Txt	VM	DP	ND	RA	NC	NV	PT	US	RW	BU	PS
								1		1		1			1	
Range	1 to 6															
Update rate	4 ms write															

Indicates the reference currently selected

1.50	**Preset reference selected indicator**															
Coding	Bit	SP	FI	DE	Txt	VM	DP	ND	RA	NC	NV	PT	US	RW	BU	PS
								1		1		1			1	
Range	1 to 8															
Update rate	4 ms write															

Indicates the preset reference currently being selected

1.51	**Power-up keypad reference control mode**															
Coding	Bit	SP	FI	DE	Txt	VM	DP	ND	RA	NC	NV	PT	US	RW	BU	PS
					1								1	1	1	
Range	0 to 2															
Default	0															
Update rate	N/A															

Selects the value of the keypad control mode (Pr **1.17**) at power-up as follows:

0 rESEt zero

1 LASt last value used before power-down

2 PrS1 Preset 1, Pr **1.21**, before power-down

1.52	**Keypad reference only select**															
Coding	Bit	SP	FI	DE	Txt	VM	DP	ND	RA	NC	NV	PT	US	RW	BU	PS
	1									1				1		
Default	0															
Update rate	4 ms read															

When this parameter is set, the speed reference is controlled by the keypad but the pushbuttons (Start / Stop / FWD / REV) do not perform their usual functions, the drive is controlled from the terminals. The pushbuttons can be used as digital inputs.

5.3 Menu 2: Ramps

The pre-ramp speed reference passes through the ramp block controlled by menu 2 before being used by the drive to produce input to the speed controller. The ramp block includes: linear ramps, an S ramp function for ramped acceleration and deceleration.

Figure 5-2 Menu 2 logic diagram

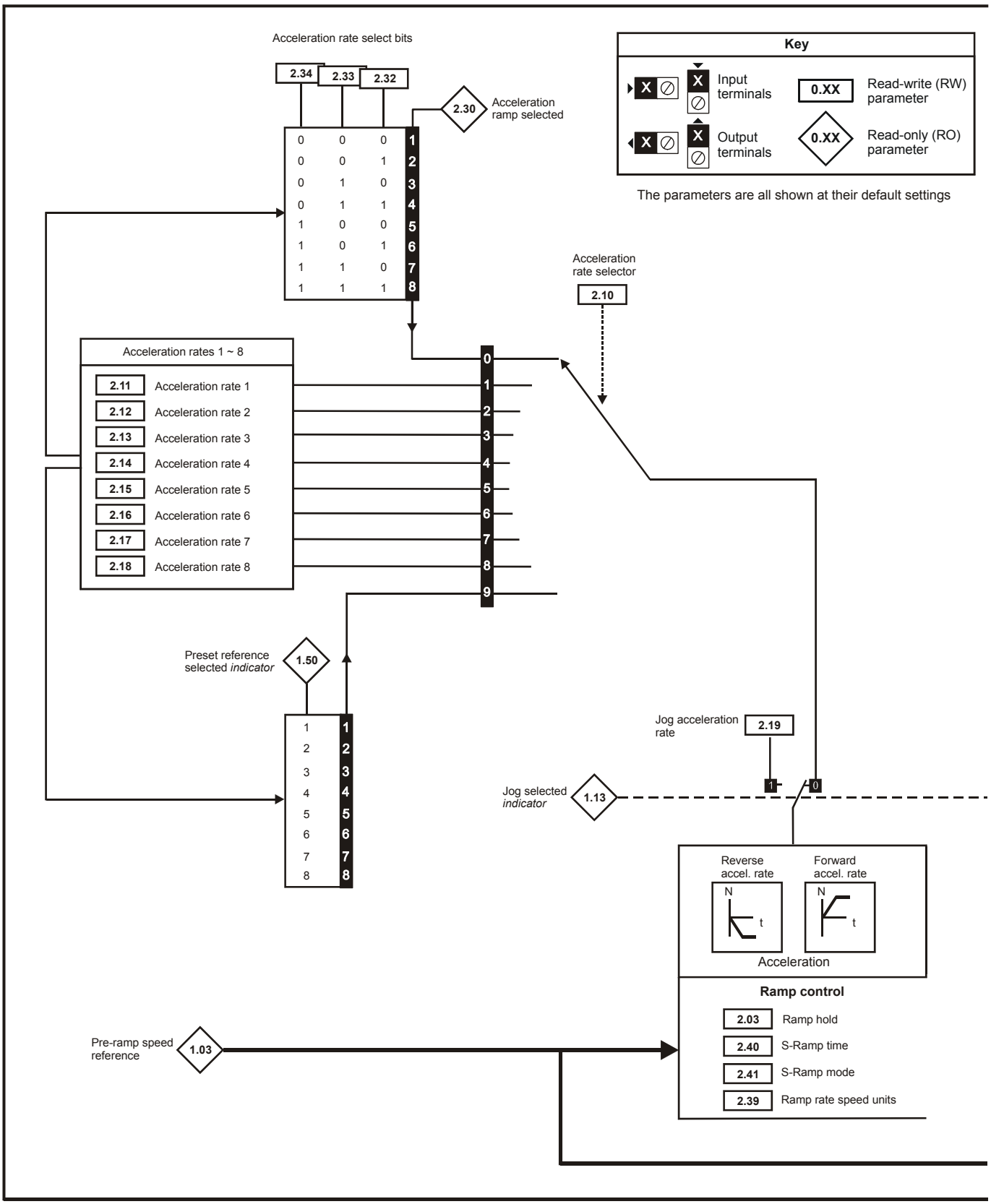

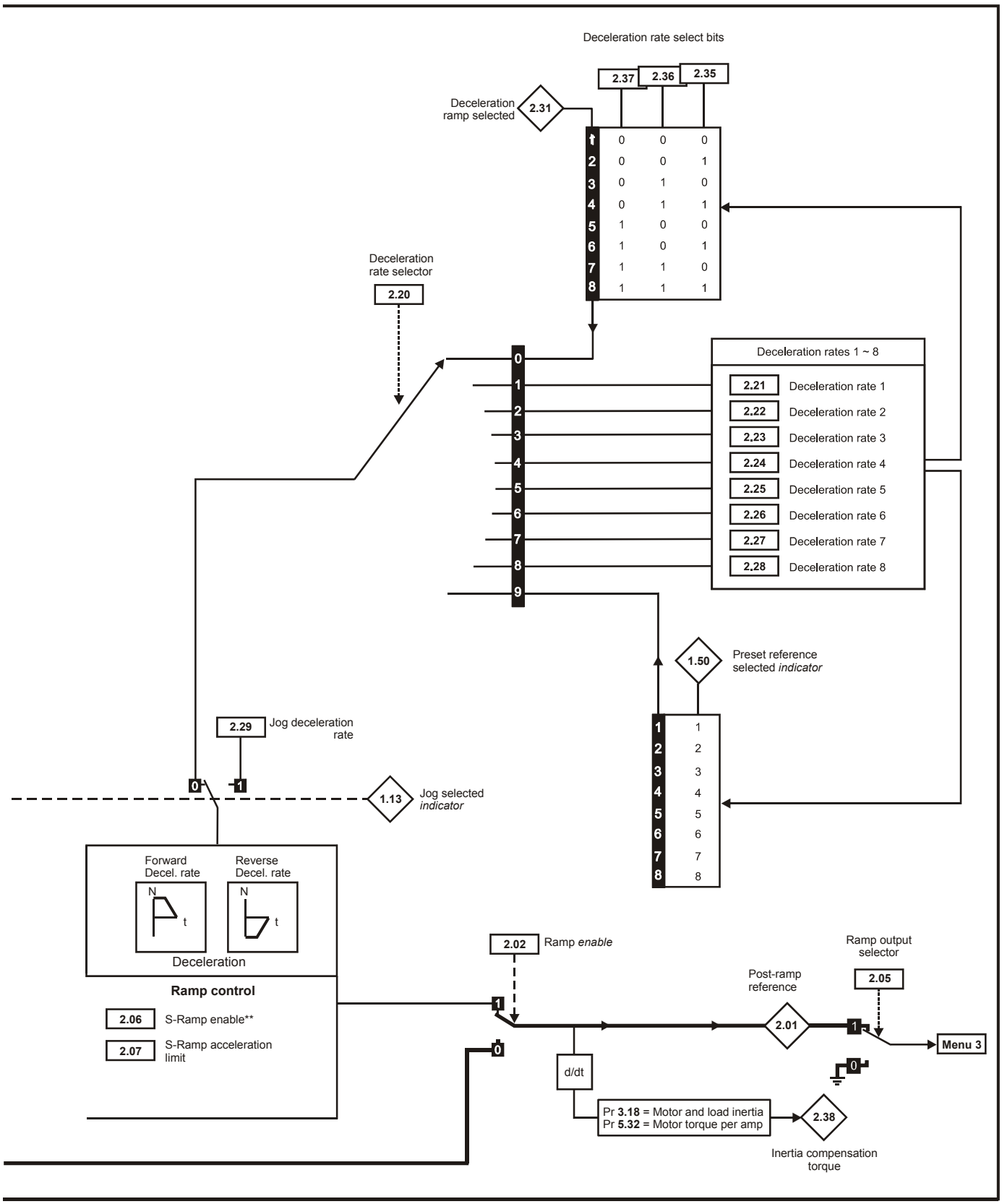

**For more information refer to Chapter 11.22 Advanced Features in the *Mentor MP User Guide*.

2.01 {di03, 0.38}	Post ramp reference															
Coding	Bit	SP	FI	DE	Txt	VM	DP	ND	RA	NC	NV	PT	US	RW	BU	PS
						1	1	1		1		1				
Range	±SPEED_MAX rpm															
Update rate	4 ms write															

2.02	Ramp enable															
Coding	Bit	SP	FI	DE	Txt	VM	DP	ND	RA	NC	NV	PT	US	RW	BU	PS
	1												1	1	1	
Default	1															
Update rate	4 ms read															

2.03	Ramp hold															
Coding	Bit	SP	FI	DE	Txt	VM	DP	ND	RA	NC	NV	PT	US	RW	BU	PS
	1												1	1		
Default	0															
Update rate	4 ms read															

If this bit is set the ramp will be held. If S ramp is enabled the acceleration will ramp towards zero causing the ramp output to curve towards a constant speed. If a drive stop is demanded the ramp hold function is disabled.

2.05	Ramp output selector															
Coding	Bit	SP	FI	DE	Txt	VM	DP	ND	RA	NC	NV	PT	US	RW	BU	PS
	1												1		1	
Default	1															
Update rate	Background read															

When Pr **2.05** is set to 0 the speed reference is set to zero.
When set to 1 the speed reference is equal to the post ramp reference.

2.06	S ramp enable															
Coding	Bit	SP	FI	DE	Txt	VM	DP	ND	RA	NC	NV	PT	US	RW	BU	PS
	1												1	1		
Default	Eur: 0 / USA: 1															
Update rate	4 ms read															

Setting this parameter enables the S ramp function.

2.07	S ramp acceleration limit															
Coding	Bit	SP	FI	DE	Txt	VM	DP	ND	RA	NC	NV	PT	US	RW	BU	PS
							3						1	1	1	
Range	0.000 to 100.000 s^2/1,000 rpm															
Default	3.600															
Update rate	Background read															

This parameter defines the maximum rate of change of acceleration/deceleration. If the S ramp is disabled (Pr **2.06** = 0) a linear ramp is used and the time in seconds taken for the ramp output to change by speed (Δ w*) is given by:

Speed

$T_{Ramp} = \Delta w^* \times A$ / See Pr **2.39**

Where A is the selected ramp rate in s / See Pr **2.39**

If the S ramp is enabled (Pr **2.06** = 1) then the ramp time is extended as shown in the diagram opposite.

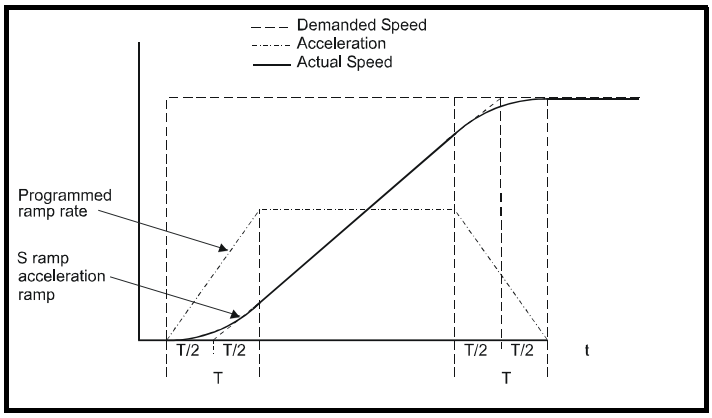

The time taken in seconds for the ramp output to change by speed (Δw^*) is given below. Two cases are given because the total ramp time must be calculated with a different equation depending on whether the acceleration is able to reach the selected ramp rate (A1) or not. If the required change is small the selected ramp rate is not reached and the ramp does not include the central linear ramp region. If the required change is larger the ramp does include the central linear region as shown in the diagram above.

Speed

$\Delta w^*_{linear} = 1000 \times J / A1^2$

where:

A = selected ramp rate

J = Pr **2.07**

If the required change is less than Δw^*_{linear} then T_{Ramp1} should be used, but if the speed change is greater or equal to Δw^*_{linear} T_{Ramp2} should be used.

$T_{Ramp1} = 2 \sqrt{(\Delta w^* \times Pr\ 2.07 / 1000)}$

$T_{Ramp2} = (\Delta w^* \times A / 1000) + (Pr\ 2.07 / A)$

The default values for the ramp rate and S ramp acceleration limit have been chosen such that for the default maximum speed, the curved parts of the S ramp are 25 % of the original ramp if S ramp is enabled. Therefore the ramp time is increased by a factor of 1.5.

2.10	**Acceleration rate selector**															
Coding	Bit	SP	FI	DE	Txt	VM	DP	ND	RA	NC	NV	PT	US	RW	BU	PS
													1	1	1	
Range	0 to 9															
Default	0															
Update rate	4 ms read															

The acceleration rate is selected as follows.

0 Ramp rate selection by terminal input

1 - 8 Ramp rate defined by parameter number, i.e. 1 = Pr **2.11** {**SE03, 0.24**}, 2 = Pr **2.12**, etc.

9 Ramp rate selection by Pr **1.50**

When Pr **2.10** is set to 0 the acceleration ramp rate selected depends on the state of bit Pr **2.32** to Pr **2.34**. These bits are for control by digital inputs such that ramp rates can be selected by external control. The ramp rate selected depends on the binary code generated by these bits as follows:

Pr 2.34	Pr 2.33	Pr 2.32	Ramp defined by
0	0	0	Pr **2.11** {**SE03, 0.24**}
0	0	1	Pr **2.12**
0	1	0	Pr **2.13**
0	1	1	Pr **2.14**
1	0	0	Pr **2.15**
1	0	1	Pr **2.16**
1	1	0	Pr **2.17**
1	1	1	Pr **2.18**

When Pr **2.10** is set to 9 the appropriate acceleration rate is automatically selected depending on the value of Pr **1.50**, and so an acceleration rate can be programmed to operate with each reference. Since the new ramp rate is selected with the new reference, the acceleration applies towards the selected preset if the motor needs to accelerate to reach the preset.

2.11 {SE03, 0.24}	Acceleration rate 1															
2.12	Acceleration rate 2															
2.13	Acceleration rate 3															
2.14	Acceleration rate 4															
2.15	Acceleration rate 5															
2.16	Acceleration rate 6															
2.17	Acceleration rate 7															
2.18	Acceleration rate 8															
Coding	Bit	SP	FI	DE	Txt	VM	DP	ND	RA	NC	NV	PT	US	RW	BU	PS
							3						1	1	1	
Range	0 to MAX_RAMP_RATE s / (Pr **1.06** {**SE02, 0.23**} or Pr **2.39**)															
Default	5.000															
Second motor parameter	Pr **21.04** for Pr **2.11** {**SE03, 0.24**} only															
Update rate	4 ms read															

NOTE

Using low values (e.g. 0.100), can cause FbL trips. To avoid trips, increase Pr **3.56** Speed feedback loss window.

2.19	Jog acceleration rate															
Coding	Bit	SP	FI	DE	Txt	VM	DP	ND	RA	NC	NV	PT	US	RW	BU	PS
							3						1	1	1	
Range	0 to MAX_RAMP_RATE s / (Pr **1.06** {**SE02, 0.23**} or Pr **2.39**)															
Default	5.000															
Update rate	Background read															

The jog acceleration rate is only used when accelerating towards the jog reference and when changing the jog reference.

2.20	Deceleration rate selector															
Coding	Bit	SP	FI	DE	Txt	VM	DP	ND	RA	NC	NV	PT	US	RW	BU	PS
													1	1	1	
Range	0 to 9															
Default	0															
Update rate	4 ms read															

The acceleration rate is selected as follows:

0 Ramp rate selection by terminal input
1 - 8 Ramp rate defined by parameter number, i.e. 1 = Pr **2.21** {**SE04, 0.25**}, 2 = Pr **2.22**, etc.
9 Ramp rate selection by Pr **1.50**

When Pr **2.20** is set to 0 the deceleration ramp rate selected depends on the state of bit Pr **2.35** to Pr **2.37**. These bits are for control by digital inputs such that ramp rates can be selected by external control. The ramp rate selected depends on the binary code generated by these bits as follows:

Pr 2.37	Pr 2.36	Pr 2.35	Ramp defined by
0	0	0	Pr **2.21** {**SE04, 0.25**}
0	0	1	Pr **2.22**
0	1	0	Pr **2.23**
0	1	1	Pr **2.24**
1	0	0	Pr **2.25**
1	0	1	Pr **2.26**
1	1	0	Pr **2.27**
1	1	1	Pr **2.28**

When Pr **2.20** is set to 9 the appropriate deceleration rate is automatically selected depending on the value of Pr **1.50**, and so a deceleration rate can be programmed to operate with each reference. Since the new ramp rate is selected with the new reference, the deceleration applies towards the selected preset if the motor needs to decelerate to reach the preset.

2.21 {SE04, 0.25}	**Deceleration rate 1**															
2.22	**Deceleration rate 2**															
2.23	**Deceleration rate 3**															
2.24	**Deceleration rate 4**															
2.25	**Deceleration rate 5**															
2.26	**Deceleration rate 6**															
2.27	**Deceleration rate 7**															
2.28	**Deceleration rate 8**															
Coding	Bit	SP	FI	DE	Txt	VM	DP	ND	RA	NC	NV	PT	US	RW	BU	PS
							3						1	1	1	
Range	0 to MAX_RAMP_RATE s / (Pr **1.06** {**SE02, 0.23**} or Pr **2.39**)															
Default	5.000															
Second motor parameter	Pr **21.05** for Pr **2.21** {**SE04, 0.25**} only															
Update rate	4 ms read															

If an deceleration rate is selected where the parameter is set to 0.000 the deceleration ramp is disabled and the reference changes instantly to its new value during deceleration.

2.29	**Jog deceleration rate**															
Coding	Bit	SP	FI	DE	Txt	VM	DP	ND	RA	NC	NV	PT	US	RW	BU	PS
							3						1	1	1	
Range	0 to MAX_RAMP_RATE s / (Pr **1.06** {**SE02, 0.23**} or Pr **2.39**)															
Default	10.000															
Update rate	Background read															

The jog deceleration rate is only used when the drive is changing speed because the jog reference has changed or to stop from the jog reference. It is not used to go from the jog to the run state. This prevents the fast ramps normally used with jog from being used when changing between running and jogging.

2.30	**Acceleration ramp selected**															
2.31	**Deceleration ramp selected**															
Coding	Bit	SP	FI	DE	Txt	VM	DP	ND	RA	NC	NV	PT	US	RW	BU	PS
								1		1		1			1	
Range	1 to 8															
Update rate	4 ms write															

Pr **2.30** indicates the acceleration ramp rate that is selected.

Pr **2.31** indicates the deceleration ramp rate that is selected.

2.32	**Acceleration select bit 0**															
2.33	**Acceleration select bit 1**															
2.34	**Acceleration select bit 2**															
2.35	**Deceleration select bit 0**															
2.36	**Deceleration select bit 1**															
2.37	**Deceleration select bit 2**															
Coding	Bit	SP	FI	DE	Txt	VM	DP	ND	RA	NC	NV	PT	US	RW	BU	PS
	1									1				1		
Update rate	4 ms read															

These bits are provided for control by logic input terminals for external ramp selection (see Pr **2.10** and Pr **2.20**).

2.38	Inertia compensation torque															
Coding	Bit	SP	FI	DE	Txt	VM	DP	ND	RA	NC	NV	PT	US	RW	BU	PS
							1	1		1		1				
Range	±1,000.0 %															
Update rate	4 ms write															

The motor and load inertia (Pr **3.18**), motor torque per amp (Pr **5.32**) and the rate of change of the ramp output (Pr **2.01** {**di03, 0.38**}) are used to produce a torque feed forward value that will accelerate or decelerate the load at the required rate. This value can be used as a feed forward term that is added to the speed controller output if Pr **4.22** is set to one. Pr **2.38** shows the torque value as a percentage of rated active current.

2.39	Ramp rate speed units															
Coding	Bit	SP	FI	DE	Txt	VM	DP	ND	RA	NC	NV	PT	US	RW	BU	PS
													1	1	1	
Range	0 to 10,000 rpm															
Default	0															
Update rate	Background read															

When this parameter is 0 the ramp rates will be the time to reach the maximum speed (Pr **1.06** {**SE02**, **0.23**}), for example if Pr **2.39** = 0 and Pr **1.06** {**SE02**, **0.23**} = 1500 rpm and Pr **2.11** {**SE03**, **0.24**} = 10 s then the drive will take 10 s to accelerate from 0 rpm to 1500 rpm.

When this parameter is not 0 the ramp times will be the time from 0 rpm to the value in Pr **2.39**, for example setting Pr **2.39** = 1000 rpm and Pr **2.11** {**SE03**, **0.24**} = 5 s the drive will take 5 s to accelerate from 0 rpm to 1000 rpm.

2.40	Time of S ramp															
Coding	Bit	SP	FI	DE	Txt	VM	DP	ND	RA	NC	NV	PT	US	RW	BU	PS
							3						1	1	1	
Range	0.000 to 100.000 s															
Default	1.250															
Update rate	Background read															

When the S ramp is enabled this parameter defines the time in each curved part of the S ramp. The total ramp time will be normal ramp rate time plus this parameter when Pr **2.40** is less than or equal the linear ramp time set by Pr **2.11** {**SE03**, **0.24**}. When Pr **2.40** is greater than the linear ramp time the total ramp time will be

J = (Pr **2.11** {**SE03**, **0.24**} x Pr **2.40** x 1000) / Pr **1.06** {**SE02**, **0.23**}

J can then be used in equation in parameter description for Pr **2.07.**

Pr 1.06 {SE02, 0.23}	Pr 2.06	Pr 2.07	Pr 2.11 {SE03, 0.24}	Pr 2.39	Pr 2.40	Pr 2.41	Total ramp time (s)
1750.0	Off	3.6	5.000	0	1.250	On	5.00
1750.0	On	3,6	5.000	0	1.250	On	6.25
1750.0	On	3.6	5.000	0	10.000	On	14.14

Only Pr **2.11** {**SE03**, **0.24**} is used in conjunction with this parameter to set the time.

2.41	S ramp mode															
Coding	Bit	SP	FI	DE	Txt	VM	DP	ND	RA	NC	NV	PT	US	RW	BU	PS
	1												1	1	1	
Default	1															
Update rate	Background read															

When this parameter is 1 (default) and the S ramp is enabled then Pr **2.40** is used to define the S ramp time. When this parameter is 0 and the S ramp is enabled then Pr **2.07** is used to define the S ramp limit.

5.4 Menu 3: Speed feedback and speed control

Speed accuracy and resolution

Digital reference resolution

When a preset speed is used the reference resolution is 0.1 rpm. Improved resolution can be obtained by using the precision reference (0.001 rpm).

Analog reference resolution

The analog input has a maximum resolution of 14bits plus sign. The resolution of the reference from analog inputs 2 or 3 is 10bits plus sign.

Analog feedback resolution

The resolution for both Armature voltage and tachometer feedback is 10bit plus sign.

Accuracy

With encoder feedback the absolute speed accuracy depends on the accuracy of the crystal used with the drive microprocessor. The accuracy of the crystal is 100ppm, and so the absolute speed accuracy is 100ppm (0.01 %) of the reference, when a preset speed is used. If an analog input is used the absolute accuracy is further limited by the absolute accuracy and non-linearity of the analog input. If analog feedback is used the accuracy is even further limited.

Parameter descriptions:

Figure 5-3 Menu 3 logic diagram

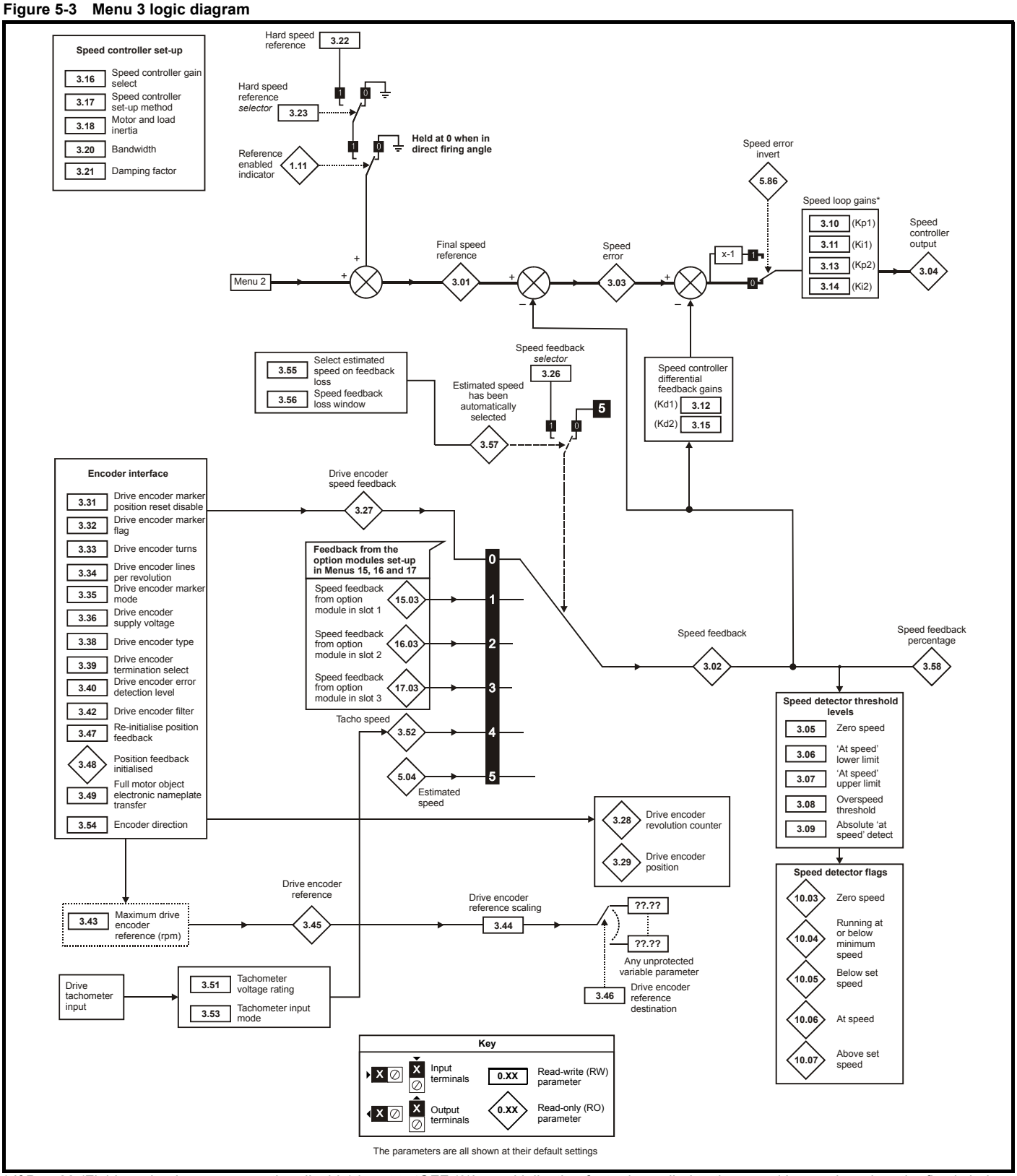

* If Pr **5.28** (Field weakening compensation disable) is set to 'OFF (0)' a multiplication factor is applied to the speed loop gains when the flux is below 100 %.

3.01 {di04, 0.39}	**Final speed reference**															
Coding	Bit	SP	FI	DE	Txt	VM	DP	ND	RA	NC	NV	PT	US	RW	BU	PS
			1			1	1	1		1		1				
Range	±SPEED_MAX rpm															
Update rate	4 ms write															

This is the final speed demand at the input to the speed regulator formed by the sum of the ramp output and the hard speed reference (if the hard speed reference is enabled). If the drive is disabled this parameter will show 0.0.

3.02 {di05, 0.40}	**Speed feedback**															
Coding	Bit	SP	FI	DE	Txt	VM	DP	ND	RA	NC	NV	PT	US	RW	BU	PS
			1			1	1	1		1		1				
Range	±SPEED_MAX rpm															
Update rate	4 ms write															

The speed feedback can be taken from the drive encoder port or tachometer or armature voltage or a position feedback module installed in any slot as selected with Pr **3.26** {**Fb01, 0.71**}. Pr **3.02** {**di05, 0.40**} shows the level of the speed feedback selected for the speed controller. Display filtering is active when this parameter is viewed with one of the drive keypads. The value held in the drive parameter (accessible via comms or an Solutions Module) does not include this filter, but is a value that is obtained over a sliding 16 ms period to limit the ripple seen in this parameter value. The speed feedback value includes encoder quantization ripple given by the following equation:

Ripple in Pr **3.02** {**Fb01, 0.71**} = 60 / 16 ms / (ELPR x 4)

Where ELPR is the equivalent encoder lines per revolution as defined below:

Position feedback device	ELPR
Ab	number of lines per revolution
Fd, Fr	number of lines per revolution / 2

For example a 4096 line Ab type encoder gives a ripple level of 0.23 rpm.

The 16 ms sliding window filter is always applied to the value shown in Pr 3.02 {Fb01, 0.71}, but this sliding window filter is not normally applied to the actual speed feedback used by the speed controller or the drive encoder reference system (Pr 3.43 to Pr 3.46). The user may apply a filter to the speed controller input and the drive encoder reference system input if required by setting Pr **3.42** to the required filter time. The encoder ripple seen by the speed controller is given by:

Encoder speed ripple = 60 / Filter time / (ELPR x 4)

If Pr **3.42** is set to zero (no filter) the ripple seen by the speed controller and drive encoder reference system is given by:

Encoder speed ripple = 60 / 250 µs / (ELPR x 4)

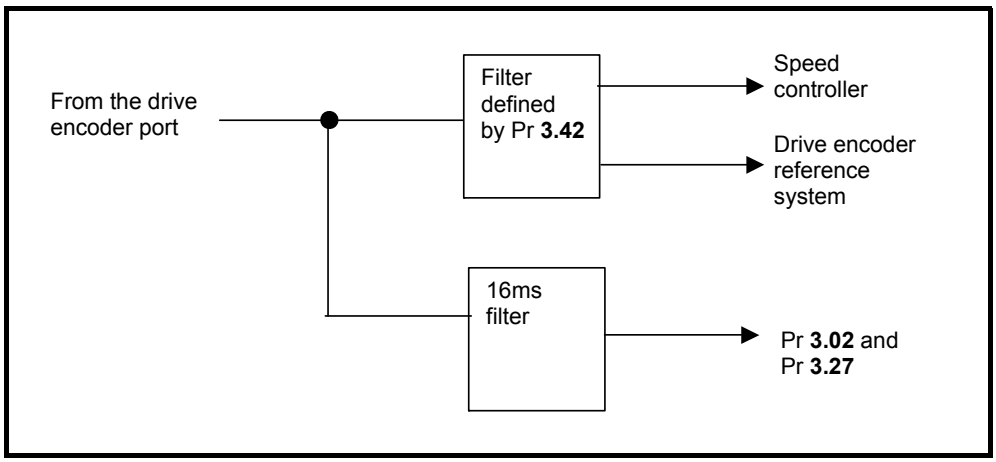

The diagram above shows the filter arrangement. It should be noted that the same filtering is provided at the speed controller input and for Pr **3.02** {**di05, 0.40**} when the feedback is obtained from an Solutions Module, but the variable length window filter is controlled by Pr **x.19**.

It is not advisable to set the speed feedback filter too high unless it is specifically required for high inertia applications with high controller gains because the filter has a non-linear transfer function. It is preferable to use the current demand filters (see Pr **4.12** or Pr **4.23**) as these are linear first order filters that provide filtering on noise generated from both the speed reference and the speed feedback. It should be noted that any filtering included within the speed controller feedback loop, either on the speed feedback or the current demand, introduces a delay and limits the maximum bandwidth of the controller for stable operation.

The speed ripple can be quite high, for example with a 4096 line encoder the speed ripple is 14.6 rpm, but this does not define the resolution of the speed feedback which is normally much better and depends on the length of the measuring period used to obtain the feedback. This is shown in the improved resolution of the value accessible in Pr **3.02** {**di05, 0.40**} which is measured over 16 ms, i.e. a resolution of 0.23 rpm with a 4096 line encoder. The speed controller itself accumulates all pulses from the encoder, and so the speed controller resolution is not limited by the feedback, but by the resolution of the speed reference.

If a SINCOS encoder is used from an option, the encoder speed ripple is reduced by a factor of $2^{(2\text{-Interpolation bits})}$.
For example, with the nominal 10 bits of interpolation information, the speed ripple is reduced by a factor of 256. This shows how a SINCOS encoder can reduce noise caused by encoder quantization without any filtering in the speed feedback or the current demand, so that high gains may be used to give high dynamic performance and a very stiff system.

3.03	**Speed error**															
Coding	Bit	SP	FI	DE	Txt	VM	DP	ND	RA	NC	NV	PT	US	RW	BU	PS
			1			1	1	1		1		1				
Range	±SPEED_MAX rpm															
Update rate	4 ms write															

The speed error is the difference between the final speed demand and the speed feedback in rpm. This does not include the effect of the D term in the speed controller feedback branch.

3.04 {di06, 0.41}	**Speed controller output**															
Coding	Bit	SP	FI	DE	Txt	VM	DP	ND	RA	NC	NV	PT	US	RW	BU	PS
			1			1	1	1		1		1				
Range	±TORQUE_PRODUCT_CURRENT_MAX %															
Update rate	4 ms write															

The output of the speed regulator is a torque demand given as a percentage of rated motor torque. This is then modified to account for changes in motor flux if field weakening is active, and then used as the torque producing current reference.

3.05	**Zero speed threshold**															
Coding	Bit	SP	FI	DE	Txt	VM	DP	ND	RA	NC	NV	PT	US	RW	BU	PS
													1	1	1	
Range	0 to 200 rpm															
Default	30															
Update rate	Background read															

If the speed feedback (Pr **3.02** {**di05, 0.40**}) is at or below the level defined by this parameter in either direction the Zero speed flag (Pr **10.03**) is 1, otherwise the flag is 0.

3.06	**At speed lower limit**															
Coding	Bit	SP	FI	DE	Txt	VM	DP	ND	RA	NC	NV	PT	US	RW	BU	PS
													1	1	1	
Range	0 to 10,000 rpm															
Default	5															
Update rate	Background read															

3.07	**At speed upper limit**															
Coding	Bit	SP	FI	DE	Txt	VM	DP	ND	RA	NC	NV	PT	US	RW	BU	PS
													1	1	1	
Range	0 to 10,000 rpm															
Default	5															
Update rate	Background read															

3.08	**Overspeed threshold**															
Coding	Bit	SP	FI	DE	Txt	VM	DP	ND	RA	NC	NV	PT	US	RW	BU	PS
													1	1	1	
Range	0 to 10,000 rpm															
Default	0															
Update rate	Background read															

If the speed feedback (Pr **3.02** {**di05, 0.40**}) exceeds this level in either direction an overspeed trip is produced. If this parameter is set to zero, the overspeed threshold is automatically set to 1.2 x SPEED_MAX.

3.09	**Absolute “at speed” select**															
Coding	Bit	SP	FI	DE	Txt	VM	DP	ND	RA	NC	NV	PT	US	RW	BU	PS
	1												1	1		
Default	0															
Update rate	Background read															

"At speed" flag (Pr **10.06**) is set if the speed feedback (Pr **3.02** {**di05, 0.40**}) is on the boundaries or within the at speed window. Flags Pr **10.07** and Pr **10.05** are set if the reference is above or below the window respectively.

If Pr **3.09** = 0 reference window mode is used and the "at speed" condition is true if

(|Pr **1.03** {**di02, 0.37**}| - Pr **3.06**) ≤ |Pr **3.02** {**di05, 0.40**}| ≤ (|Pr **1.03** {**di02, 0.37**}| + Pr **3.07**)

(If the lower limit is less than zero then zero is used as the lower limit.)

If Pr **3.09** = 1 absolute window mode is used and the "at speed" condition is true if

Pr **3.06** ≤ |Pr **3.02** {**di05, 0.40**}| ≤ Pr **3.07**

3.10 {SP01, 0.61} 3.13	**(Kp1) Speed controller proportional gains (Kp2)**															
Coding	Bit	SP	FI	DE	Txt	VM	DP	ND	RA	NC	NV	PT	US	RW	BU	PS
							4						1	1	1	
Range	0.0000 to 6.5535 (1 / (rad/s))															
Default	0.0300															
Second motor parameter	Pr **21.17 (3.10)**															
Update rate	Background read															

See the description under Pr **3.16**.

3.11 {SP02, 0.62} 3.14	**(Ki1) Speed controller integral gains (Ki2)**															
Coding	Bit	SP	FI	DE	Txt	VM	DP	ND	RA	NC	NV	PT	US	RW	BU	PS
							2						1	1	1	
Range	0.00 to 655.35 (s / (rad/s))															
Default	0.10															
Second motor parameter	Pr **21.18 (3.11)**															
Update rate	Background read															

See the description under Pr **3.16**

3.12 {SP03, 0.63} 3.15	**(Kd1) Speed controller differential feedback gains (Kd2)**															
Coding	Bit	SP	FI	DE	Txt	VM	DP	ND	RA	NC	NV	PT	US	RW	BU	PS
							5						1	1	1	
Range	0.00000 to 0.65535(1/s / (rad/s))															
Default	0.00000															
Second motor parameter	Pr **21.19** (Pr **3.12** {**SP03, 0.63**})															
Update rate	Background read															

See the description under Pr **3.16**.

3.16	**Speed controller gain select**															
Coding	Bit	SP	FI	DE	Txt	VM	DP	ND	RA	NC	NV	PT	US	RW	BU	PS
	1												1	1		
Default	0															
Update rate	4 ms read															

The diagram below shows a generalized representation of the speed controller. The controller includes proportional, (Kp) and integral, (Ki) feed forward terms, and a differential, (Kd) feedback term. The drive holds two sets of these gains and either set may be selected for use by the speed controller with Pr **3.16**. If Pr **3.16** = 0 then gains Kp1, Ki1 and Kd1 are used, if Pr **3.16** = 1 then gains Kp2, Ki2 and Kd2 are used. Pr **3.16** may be changed when the drive is enabled or disabled.

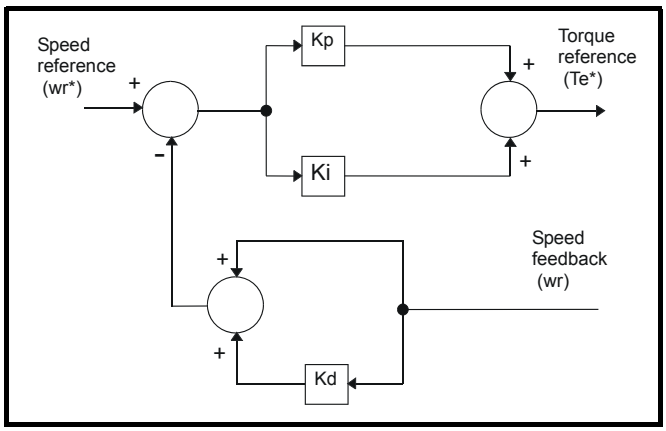

Proportional gain (Kp)

If Kp has a value and Ki is set to zero the controller will only have a proportional term, and there must be a speed error to produce a torque reference. Therefore as the motor load increases there will be a difference between the reference and actual speeds. This effect, called regulation, depends on the level of the proportional gain, the higher the gain the smaller the speed error for a given load. If the proportional gain is too high either the acoustic noise produced by speed feedback quantization (using digital encoders, resolvers, etc.) becomes unacceptable, or the closed-loop stability limit is reached (using SINCOS encoders).

Integral gain (Ki)

The integral gain is provided to prevent speed regulation. The error is accumulated over a period of time and used to produce the necessary torque demand without any speed error. Increasing the integral gain reduces the time taken for the speed to reach the correct level and increases the stiffness of the system, i.e. it reduces the positional displacement produced by applying a load torque to the motor. Unfortunately increasing the integral gain also reduces the system damping giving overshoot after a transient. For a given integral gain the damping can be improved by increasing the proportional gain. A compromise must be reached where the system response, stiffness and damping are all adequate for the application. The integral term is implemented in the form of $\sum$(Ki x error), and so the integral gain can be changed when the controller is active without causing large torque demand transients.

Differential gain (Kd)

The differential gain is provided in the feedback of the speed controller to give additional damping. The differential term is implemented in a way that does not introduce excessive noise normally associated with this type of function. Increasing the differential term reduces the overshoot produced by under-damping, however, for most applications the proportional and integral gains alone are sufficient. It should be noted that the differential term is limited internally so that it is ineffective if speed in rpm x Kd x Ki is greater than 170.

To analyze the performance of the speed controller it may be represented as an s-domain model as shown below.

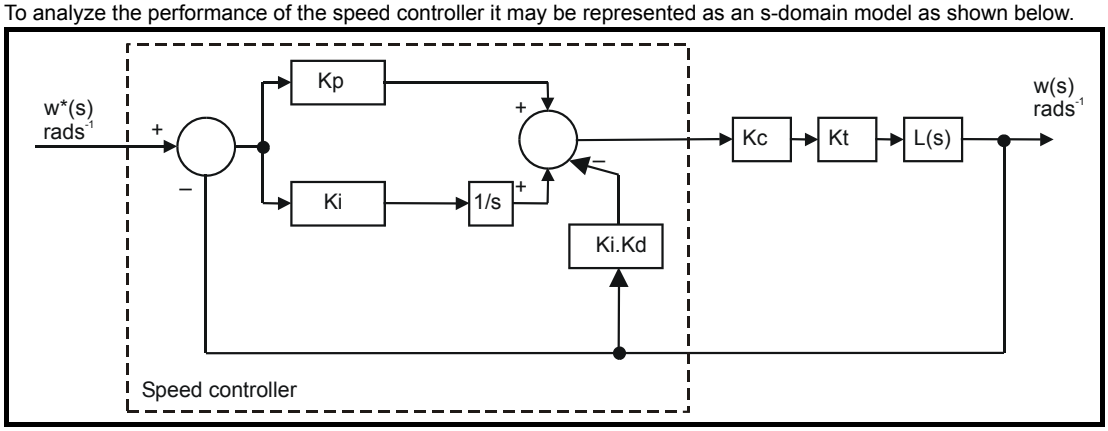

where:

Kc is the conversion between the speed controller output and torque producing current. A value of unity at the input to this block gives a torque producing current equivalent to the rated current of the drive. The drive automatically compensates the torque producing current for flux variations in field weakening, and so Kc can be assumed to have a constant value. Kc is equal to the rated drive current (see Menu 4 for value of Rated drive current for each drive size).

Kt is the torque constant of the motor (i.e. torque in Nm per amp of torque producing current).

Kt = Motor rated torque / Motor rated current

L(s) is the transfer function of the load.

The s-domain system above may be used to determine the performance of systems with a relatively low bandwidth. However, the real drive system also includes non-ideal delays due to the torque controller response, and speed measurement and control delays. These delays, which can be approximated with a simple unity gain transport delay (T_{delay}) as shown below, should be taken into account for more accurate results.

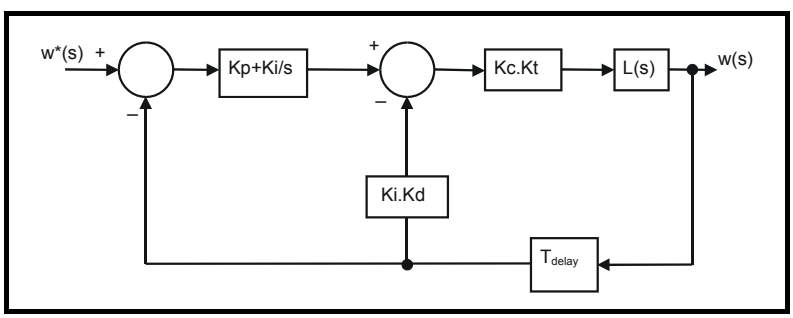

The speed controller gains used in previous Mentor II products were in internal drive units. Conversion between the previous internal units and the SI units used in this product are given in the table below.

Gain	Conversion from previous internal units to new SI units
Kp	Kp_old ***1.79** / Maximum speed (rpm)
Ki	Ki_old * mains freq / (**2.97** * Maximum speed (rpm))
Kd	Kd_old ***3.58** / (mains freq * Maximum speed (rpm))

3.17	**Speed controller setup method**															
Coding	Bit	SP	FI	DE	Txt	VM	DP	ND	RA	NC	NV	PT	US	RW	BU	PS
													1	1	1	
Range	0 to 2															
Default	0															
Update rate	Background (1s) read															

The user may enter the required speed controller gains into Pr **3.10** {**SP01, 0.61**} to Pr **3.15.** However, if the load is predominantly a constant inertia and constant torque, the drive can calculate the required Kp and Ki gains, provided a value of motor plus load inertia (Pr **3.18**) and the motor torque per amp (Pr **5.32**) are setup correctly. The calculated values for Kp and Ki are written to Pr **3.10** {**SP01, 0.61**} and Pr **3.11**{**SP02, 0.62**} once per second when one of these setup methods is selected (i.e. Pr **3.17** = 1 or 2). The values are calculated from a linear model assuming a pure inertia load, not including unwanted delays in the speed and current controllers. The Kd gain is not affected. If Pr **3.17** is set to 2 automatic gain set up is not active, but Kp is boosted by a factor of 16.

0: user setup

With the default value the user should enter the required speed controller gains.

1: Bandwidth setup

If bandwidth based setup is required the following parameters must be set correctly: Pr **3.20** = required bandwidth, Pr **3.21** = required damping factor, Pr **3.18** = motor + load inertia (it is possible to measure the load inertia as part of the auto-tuning process, see Pr **5.12** on page 75), Pr **5.32** = motor torque per amp.

$$Ki = J / (Kc \times Kt) \times (2\pi \times \text{Bandwidth} / Kbw)^2 = \text{Pr } \mathbf{3.18} / (\text{rated drive current} \times \text{Pr } \mathbf{5.32}) \times (2\pi \times \text{Pr } \mathbf{3.20} / Kbw)^2$$

Where: $Kbw = \sqrt{[(2\xi^2 + 1) + \sqrt{((2\xi^2 + 1)^2 + 1)}]}$

$$Kp = 2\xi\sqrt{[(Ki \times J) / (Kc \times Kt)]} = 2\xi\sqrt{[(\text{Pr } \mathbf{3.11} \{\mathbf{SP02, 0.62}\} \times \text{Pr } \mathbf{3.18}) / (\text{rated drive current} \times \text{Pr } \mathbf{5.32})]}$$

2: Kp gain times 16

If this parameter is set to 2 the Kp gain (from whichever source) is multiplied by 16. This is intended to boost the range of Kp for applications with very high inertia. It should be noted that if high values of Kp are used it is likely that the speed controller output will need to be filtered (see Pr **4.12**) or the speed feedback will need to be filtered (see Pr **3.42**). If the feedback is not filtered it is possible the output of the speed controller will be a square wave that changes between the current limits causing the integral term saturation system to malfunction.

3.18	Motor and load inertia															
Coding	Bit	SP	FI	DE	Txt	VM	DP	ND	RA	NC	NV	PT	US	RW	BU	PS
							5						1	1	1	
Range	0.00000 to 90.00000 kg m^2															
Default	0.00000															
Update rate	Background (1s) read															

The motor and load inertia represents the total inertia driven by the motor. This is used to set the speed controller gains (see Pr **3.13**) and to provide torque feed-forward terms during acceleration when required (see Pr **4.11**). It is possible to measure the inertia as part of the autotune process, see Pr **5.12** {**SE13, 0.34**}.

3.20	Bandwidth															
Coding	Bit	SP	FI	DE	Txt	VM	DP	ND	RA	NC	NV	PT	US	RW	BU	PS
													1	1	1	
Range	0 to 50 Hz															
Default	1 Hz															
Update rate	Background (1s) read															

The bandwidth is defined as the theoretical 3dB point on the closed-loop gain characteristic of the speed controller as a second order system. At this point the phase shift is approximately 60°. This parameter is used to define the bandwidth used for setting up the speed loop gain parameters automatically when Pr **3.17** = 1.

3.21	Damping factor															
Coding	Bit	SP	FI	DE	Txt	VM	DP	ND	RA	NC	NV	PT	US	RW	BU	PS
							1						1	1	1	
Range	0.0 to 10.0															
Default	1.0															
Update rate	Background (1s) read															

This is the damping factor related to the response of the system to a torque transient, and so if the damping factor is unity the response to a load torque transient is critically damped. The step response of the speed controller gives approximately 10 % overshoot with unity damping factor.

3.22	Hard speed reference															
Coding	Bit	SP	FI	DE	Txt	VM	DP	ND	RA	NC	NV	PT	US	RW	BU	PS
						1	1						1	1		
Range	±MAX_SPEED_REF rpm															
Default	0.0															
Update rate	4 ms read															

3.23	**Hard speed reference selector**															
Coding	Bit	SP	FI	DE	Txt	VM	DP	ND	RA	NC	NV	PT	US	RW	BU	PS
	1												1	1		
Default	0															
Update rate	4 ms read															

The hard speed reference is a reference value which does not pass through the ramp system (Menu 2). It is added to the normal post ramp speed reference. Its value may be written from the keypad, via serial comms, from an analog input or from an encoder input. This parameter can also be used by the position controller (Menu 13) as the speed reference input. The hard speed reference is selected when Pr **3.23** = 1.

3.26 {Fb01, 0.71}	**Speed feedback selector**															
Coding	Bit	SP	FI	DE	Txt	VM	DP	ND	RA	NC	NV	PT	US	RW	BU	PS
					1								1	1	1	
Range	0 to 5															
Default	5															
Second motor parameter	Pr **21.21**															
Update rate	Background read (Only has any effect when the drive is disabled)															

0, drv: Drive encoder

The position feedback from the encoder connected to the drive itself is used to derive the speed feedback for the speed controller.

1, Slot1: Solutions Module in slot 1

The position feedback from the option module in option module slot 1 is used to derive the speed feedback for the speed controller. If a position feedback category option module is not installed in slot 1 the drive produces an Enc9 trip if the drive is active.

2, Slot2: Solutions Module in slot 2

3, Slot3: Solutions Module in slot 3

4, tACHO: Tachometer

5, ESt.SPEED: Estimated speed

3.27 {Fb09, 0.79}	**Drive encoder speed feedback**															
Coding	Bit	SP	FI	DE	Txt	VM	DP	ND	RA	NC	NV	PT	US	RW	BU	PS
			1				1	1		1		1				
Range	±10,000.0 rpm															
Update rate	4 ms write															

Provided the setup parameters for the drive encoder are correct this parameter shows the encoder speed in rpm.

It should be noted that the value shown by this parameter is measured over a 16 ms sliding window period (in the same way as Pr **3.02** {**di05, 0.40**}), and so the ripple in this parameter accessible via comms or by an Solutions Module is as defined for Pr **3.02** {**di05, 0.40**}. The FI attribute for this parameter is set, and so further filtering is applied when this parameter is viewed with one of the drive keypads.

3.28	**Drive encoder revolution counter**															
Coding	Bit	SP	FI	DE	Txt	VM	DP	ND	RA	NC	NV	PT	US	RW	BU	PS
			1					1		1		1				
Range	±32,678 revolutions															
Update rate	4 ms write															

This is used in conjunction with Pr **3.29**. See the description under Pr **3.29** overleaf.

3.29	**Drive encoder position**															
Coding	Bit	SP	FI	DE	Txt	VM	DP	ND	RA	NC	NV	PT	US	RW	BU	PS
			1					1		1		1			1	
Range	0 to 65,535 ($1/2^{16}$ths of a revolution)															
Update rate	4 ms write															

These parameters effectively give the encoder position with a resolution of $1/2^{16}$ths of a revolution as a 32 bit number as shown below.

31 16	15 0
Revolutions	Position

Provided the encoder setup parameters are correct, the position is always converted to units of $1/2^{16}$ths of a revolution, but some parts of the value may not be relevant depending on the resolution of the feedback device. For example a 1024 line digital encoder produces 4096 counts per revolution, and so the position is represented by the bits in the shaded area only.

31 16	15 4	3 0
Revolutions	Position	

When the encoder rotates by more than one revolution, the revolutions in Pr **3.28** increment or decrement in the form of a sixteen bit roll-over counter.

3.31	**Drive encoder marker position reset disable**															
Coding	Bit	SP	FI	DE	Txt	VM	DP	ND	RA	NC	NV	PT	US	RW	BU	PS
	1												1	1		
Default	0															
Update rate	Background read															

3.32	**Drive encoder marker flag**															
Coding	Bit	SP	FI	DE	Txt	VM	DP	ND	RA	NC	NV	PT	US	RW	BU	PS
	1									1				1		
Default	0															
Update rate	250 µs write															

An incremental digital encoder may have a marker channel. When this channel becomes active it may be used to reset the encoder position and set the marker flag (Pr **3.31** = 0), or just to set the marker flag (Pr **3.31** = 1). The marker flag is set each time the marker input becomes active, but it is not reset by the drive, and so it must be cleared by the user.

If Pr **3.35** is set to zero the marker system operates in a conventional manner and only resets the position (Pr **3.29**) and not the turns (Pr **3.28**) on a marker event. If Pr **3.35** is set to one the whole position (Pr **3.28** and Pr **3.29**) are reset on a marker event. The full reset mode allows the marker to give a form of registration where the marker event defines zero position.

3.33	**Drive encoder turns bits**															
Coding	Bit	SP	FI	DE	Txt	VM	DP	ND	RA	NC	NV	PT	US	RW	BU	PS
													1	1	1	
Range	0 to 16															
Default	16															
Update rate	Background read (Only has any effect when the drive is disabled)															

This parameter has a different function depending on the type of encoder selected with Pr **3.38** and Pr **3.39.**

It is sometimes desirable to mask off the most significant bits of the revolution counter of encoders. This does not have to be done for the drive to function correctly. If Pr **3.33** is zero the revolution counter (Pr **3.28**) is held at zero. If Pr **3.33** has any other value it defines the maximum number of the revolution counter before it is reset to zero. For example, if Pr **3.33** = 5, then Pr **3.28** counts up to 31 before being reset.

3.34 {Fb05, 0.75}	**Drive encoder lines per revolution**															
Coding	Bit	SP	FI	DE	Txt	VM	DP	ND	RA	NC	NV	PT	US	RW	BU	PS
													1	1	1	
Range	1 to 50,000															
Default	1,024															
Update rate	Background read (Only has any effect when the drive is disabled)															

When Ab, Fd, Fr are used the equivalent number of encoder lines per revolution must be setup correctly in Pr **3.34** to give the correct speed and position feedback. This is particularly important if the encoder is selected for speed feedback with Pr **3.26** {**Fb01, 0.71**}. The equivalent number of encoder lines per revolution (ELPR) is defined as follows.:

Position feedback device	ELPR
Ab	number of lines per revolution
Fd, Fr	number of lines per revolution / 2

The incremental (A/B) signal frequency should not exceed 500 kHz. If Pr **3.34** {**Fb05, 0.75**} is changed the encoder is re-initialized.

3.35	**Drive encoder marker mode**															
Coding	Bit	SP	FI	DE	Txt	VM	DP	ND	RA	NC	NV	PT	US	RW	BU	PS
													1	1	1	
Range	0 to 1															
Default	0															
Update rate	Background read (Only has any effect when the drive is disabled)															

Pr **3.35** defines the marker mode. If this parameter is zero the marker system operates in a conventional manner, but if this parameter is non-zero the marker causes a full position reset.

3.36 {Fb06, 0.76}	**Drive encoder supply voltage**															
Coding	Bit	SP	FI	DE	Txt	VM	DP	ND	RA	NC	NV	PT	US	RW	BU	PS
					1								1	1	1	
Range	0 to 3															
Default	0															
Update rate	Background read															

The encoder supply voltage present on the drive encoder connector is defined by this parameter as 0 (5 V), 1 (8 V), 2 (15 V) or 3 (24 V)

3.38 {Fb07, 0.77}	**Drive encoder type**															
Coding	Bit	SP	FI	DE	Txt	VM	DP	ND	RA	NC	NV	PT	US	RW	BU	PS
					1								1	1	1	
Range	0 to 2															
Default	0															
Update rate	Background read (Only has any effect when the drive is disabled)															

The following encoders can be connected to the drive encoder port.

0, Ab: Quadrature incremental encoder, with or without marker pulse

1, Fd: Incremental encoder with frequency and direction outputs, with or without marker pulse

2, Fr: Incremental encoder with forward and reverse outputs, with or without marker pulse

3.39 {Fb08, 0.78}	Drive encoder termination select															
Coding	Bit	SP	FI	DE	Txt	VM	DP	ND	RA	NC	NV	PT	US	RW	BU	PS
													1	1		
Range	0 to 2															
Default	1															
Update rate	Background read															

The terminations may be enabled/disabled by this parameter as follows:

Encoder input	Pr 3.39=0	Pr 3.39=1	Pr 3.39=2
A-A\	Disabled	Enabled	Enabled
B-B\	Disabled	Enabled	Enabled
Z-Z\	Disabled	Disabled	Enabled

3.40	Drive encoder error detection level															
Coding	Bit	SP	FI	DE	Txt	VM	DP	ND	RA	NC	NV	PT	US	RW	BU	PS
													1	1	1	
Range	0 to 2															
Default	0															
Update rate	Background read															

Trips can be enabled/disabled using Pr **3.40** as follows:

Bit	Function
0	Wire break detect disabled
1	Wire break detect on A and B (need termination enabled for 5 V and 8 V)
2	Wire break detect on A, B and Z (need termination enabled for 5 V signals)

Encoder trips

The following table shows trips that can be initiated that are related to the drive encoder feedback and whether they can be enabled and disabled by Pr **3.40**.

Reason for error	Drive trip
Power supply short circuit or overload on drive encoder terminals	Enc1
+Hardware wire-break detect on A, B and Z inputs(1)	Enc2
Power supply short circuit or overload on option encoder supply	Enc3
Speed feedback selected from an option slot that does not have a position feedback category Solutions Module installed	Enc9
Termination Overload	Enc10

+These trips can be enabled/disabled by Pr **3.40**

1. If the terminations are not enabled on the A, B or Z inputs the wire break system will not operate (5 V or 8 V only). (Note that as default the Z input terminations are disabled to disable wire break detection on this input.)

Wire-break detection

It may be important to detect a break in the connections between the drive and the position feedback device. This feature is provided for most encoder types either directly or indirectly as listed below.

Device	Detection method	Drive Trip
Ab, Fd, Fr	Hardware detectors on the A(F), B(D,R) and Z signal detect a wire break	Enc2

Power supply short circuit or overload on drive encoder terminals

There is an overload or short circuit on the drive encoder terminals.

Power supply short circuit or overload on option encoder supply

There is an overload or short circuit on the option encoder power supply.

Both the above trips can over ride trip Enc2 so if there is a wire break trip and then a power supply trip the drive will store both trips in the trip log. Both the above trips turn the terminal encoder supply off.

3.42	**Drive encoder filter**															
Coding	Bit	SP	FI	DE	Txt	VM	DP	ND	RA	NC	NV	PT	US	RW	BU	PS
					1								1	1	1	
Range	0 to 5 (0 to16 ms)															
Default	2															
Update rate	Background read															

0 = 0 ms, 1 = 1 ms, 2 = 2 ms, 3 = 4 ms, 4 = 8 ms, 5 = 16 ms

A sliding window filter may be applied to the feedback taken from the drive encoder. This is particularly useful in applications where the drive encoder is used to give speed feedback for the speed controller and where the load includes a high inertia, and so the speed controller gains are very high. Under these conditions, without a filter on the feedback, it is possible for the speed loop output to change constantly from one current limit to the other and lock the integral term of the speed controller.

3.43	**Maximum drive encoder reference**															
Coding	Bit	SP	FI	DE	Txt	VM	DP	ND	RA	NC	NV	PT	US	RW	BU	PS
													1	1	1	
Range	0 to 10,000 rpm															
Default	1000															
Update rate	Background read															

3.44	**Drive encoder reference scaling**															
Coding	Bit	SP	FI	DE	Txt	VM	DP	ND	RA	NC	NV	PT	US	RW	BU	PS
							3						1	1	1	
Range	0.000 to 4.000															
Default	1.000															
Update rate	Background read															

3.45	**Drive encoder reference**															
Coding	Bit	SP	FI	DE	Txt	VM	DP	ND	RA	NC	NV	PT	US	RW	BU	PS
			1				1			1		1				
Range	±100.0 %															
Update rate	4 ms write															

The drive encoder reference (Pr **3.45**) gives the speed of the encoder input as a percentage of the maximum drive encoder reference provided that the number of encoder lines per revolution (Pr **3.34** {**Fb05, 0.75**}) has been set up correctly. This may then be scaled and routed to any non-protected drive parameter.

3.46	**Drive encoder reference destination**															
Coding	Bit	SP	FI	DE	Txt	VM	DP	ND	RA	NC	NV	PT	US	RW	BU	PS
				1			2					1	1	1	1	
Range	00.00 to 22.99															
Default	00.00															
Update rate	Read on reset															

The drive encoder input can be used as a reference to control a drive parameter. The drive encoder reference parameter (Pr **3.45**) gives the speed of the encoder input as a percentage of the maximum drive encoder reference provided that the number of encoder lines per revolution (Pr **3.34** {**Fb05, 0.75**}) has been set up correctly. This may then be scaled and routed to any non-protected drive parameter.

3.47	**Re-initialise position feedback**															
Coding	Bit	SP	FI	DE	Txt	VM	DP	ND	RA	NC	NV	PT	US	RW	BU	PS
	1									1				1		
Update rate	Background read															

The encoder is re-initialized when this is set to 1 or encoder supplies are restored or a trip reset Pr **3.47** is automatically reset when re-initialization is complete. To allow detection of non initialized state Pr **3.48** remains zero for 500µs.

3.48	Position feedback initialised															
Coding	Bit	SP	FI	DE	Txt	VM	DP	ND	RA	NC	NV	PT	US	RW	BU	PS
	1							1		1		1				
Update rate	Background write															

At power-up Pr **3.48** is initially zero, but is set to one when the drive encoder and any encoders connected to position category modules have been initialized. The drive cannot be enabled until this parameter is one.

If any trips occur that could indicate that the encoder system is no longer initialized correctly (i.e. Enc2), or the encoder power supplies are overloaded (i.e. Enc1), Pr **3.48** is set to zero and the drive cannot be enabled until the encoder is re-initialized. It is likely that the failure of either of these supplies will cause one of the other encoder trips and it should be noted that Enc1 or PS.24V trips can override Enc2 trips so that the power supply overload is not mistaken for an encoder error.

3.49	Full motor object electronic nameplate transfer															
Coding	Bit	SP	FI	DE	Txt	VM	DP	ND	RA	NC	NV	PT	US	RW	BU	PS
	1												1	1		
Default	0															
Update rate	Read on reset															

When this parameter is set to one, additional information for the motor object can be transferred from Pr **18.11** to Pr **18.17** as shown below:

User parameter	Motor object parameter
Pr **18.11**	Motor object version number
Pr **18.12**	Motor type (MSW)
Pr **18.13**	Motor type (LSW)
Pr **18.14**	Motor manufacturer
Pr **18.15**	Motor serial number (MSW)
Pr **18.16**	Motor serial number
Pr **18.17**	Motor serial number (LSW)

3.50	Position feedback lock															
Coding	Bit	SP	FI	DE	Txt	VM	DP	ND	RA	NC	NV	PT	US	RW	BU	PS
	1									1				1		
Default	0															
Update rate	4 ms read															

If Pr **3.50** is set to one Pr **3.28**, Pr **3.29** are not updated. If this parameter is set to zero these parameters are updated normally.

3.51 {Fb02, 0.72}	Tachometer voltage rating															
Coding	Bit	SP	FI	DE	Txt	VM	DP	ND	RA	NC	NV	PT	US	RW	BU	PS
							2						1	1	1	
Range	0 to 300.00 V/1000 rpm															
Default	Eur: 60.00, USA: 50.00															
Update rate	Background read															

Defines the rating of the tachometer installed to the motor. This parameter should be set slightly above or below the nominal value if the user wishes to trim out the tolerance build ups in the feedback electronics. Parameter units are DC in DC mode and rms AC in AC mode.

3.52 {Fb04, 0.74}	Tachometer speed feedback															
Coding	Bit	SP	FI	DE	Txt	VM	DP	ND	RA	NC	NV	PT	US	RW	BU	PS
			1			1	1	1		1		1				
Range	±SPEED_MAX rpm															
Update rate	1 ms write															

Provided the tachometer voltage rating parameter for the tachometer is correct this parameter shows the tachometer speed in rpm.

3.53 {Fb03, 0.73}	**Tachometer input mode**															
Coding	Bit	SP	FI	DE	Txt	VM	DP	ND	RA	NC	NV	PT	US	RW	BU	PS
					1								1	1		
Range	0 to 2															
Default	0 (DC)															
Update rate	Background read															

The input electronics for the tachometer input can be configured in 3 ways.

Value	Text	Action
0	DC	DC tachometer
1	DC Filt	DC tachometer with input filter
2	AC	AC tachometer

3.54	**Encoder direction**															
Coding	Bit	SP	FI	DE	Txt	VM	DP	ND	RA	NC	NV	PT	US	RW	BU	PS
	1												1	1		
Default	0															
Update rate	Background read															

If the encoder has been incorrectly wired this bit can be used to correct the encoder feedback.

0 - Clockwise

1 - Anti clockwise

3.55	**Select estimated speed on feedback loss**															
Coding	Bit	SP	FI	DE	Txt	VM	DP	ND	RA	NC	NV	PT	US	RW	BU	PS
	1												1	1		
Default	0															
Update rate	Background read															

When this bit is set the speed feedback source is automatically changed to estimated speed feedback when the selected speed feedback is lost.

3.56	**Speed feedback loss window**															
Coding	Bit	SP	FI	DE	Txt	VM	DP	ND	RA	NC	NV	PT	US	RW	BU	PS
							1						1	1	1	
Range	0 to 100 %															
Default	20.0 %															
Update rate	Background read															

When Pr **3.55** is set to a 1 Pr **3.56** defines the window over which the software will automatically select the estimated feedback.

Window = 03.56 % * Base speed (Pr **5.08** {**SE08, 0.29**} or Pr **21.06**)

If | Selected feedback - estimate feedback | > Window then

    If Selected feedback sign different to estimate feedback sign then
        Feedback polarity error
    End if
    If Pr **3.55** is 1 then
        Pr **3.57** = 1
    Else
        Feedback loss error
    End if

End if

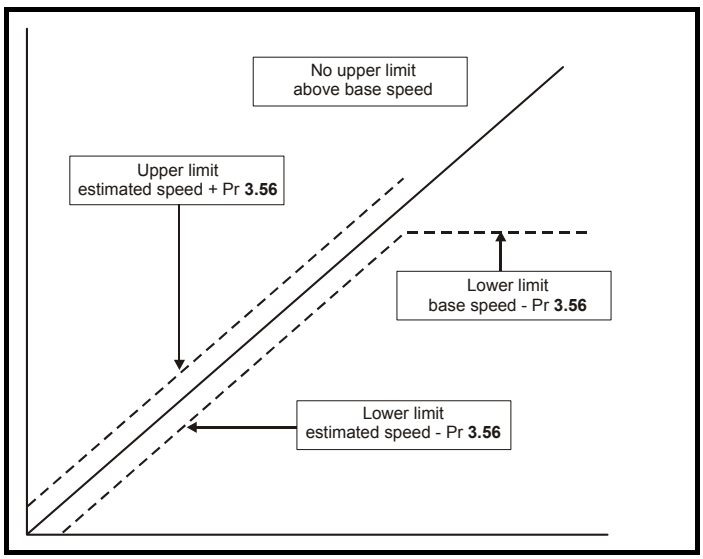

3.57	**Estimated speed has been automatically selected**															
Coding	Bit	SP	FI	DE	Txt	VM	DP	ND	RA	NC	NV	PT	US	RW	BU	PS
	1															
Update rate	Background write															

Indicate bit to indicate that the speed feedback is outside the loss window, see Pr **3.55** and Pr **3.56**. Cleared to zero when the drive is inactive.

3.58	**Speed feedback percentage**															
Coding	Bit	SP	FI	DE	Txt	VM	DP	ND	RA	NC	NV	PT	US	RW	BU	PS
							1	1		1		1				
Range	±100.0 %															
Update rate	Background write															

Gives the speed feedback as a percentage of MAX_SPEED_REF.

5.5 Menu 4: Torque and current control

MOTOR1_CURRENT_LIMIT_MAX is used as the maximum for some parameters such as the user current limits. The current maximum current limit is defined as follows (with a maximum of 1000 %):

$$\textbf{CURRENT_LIMIT_MAX} = \left[\frac{\textbf{Maximum current}}{\textbf{Motor rated current}}\right] \times \textbf{100\%}$$

Where:

Motor rated current is given by Pr **5.07** {**SE07, 0.28**}

(MOTOR2_CURRENT_LIMIT_MAX is calculated from the motor map 2 parameters). The maximum current is 1.5 x drive rating.

Figure 5-4 Menu 4 logic diagram

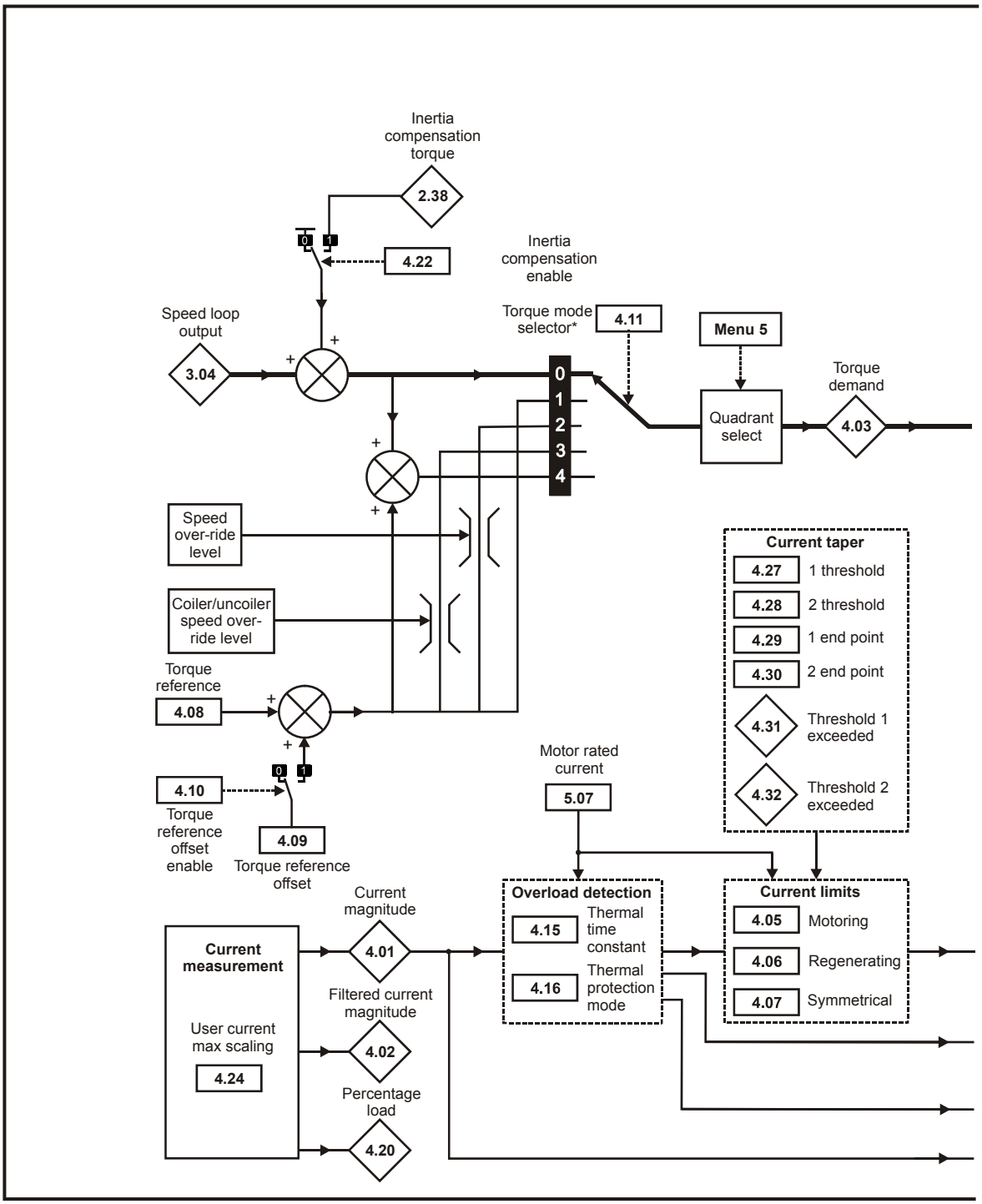

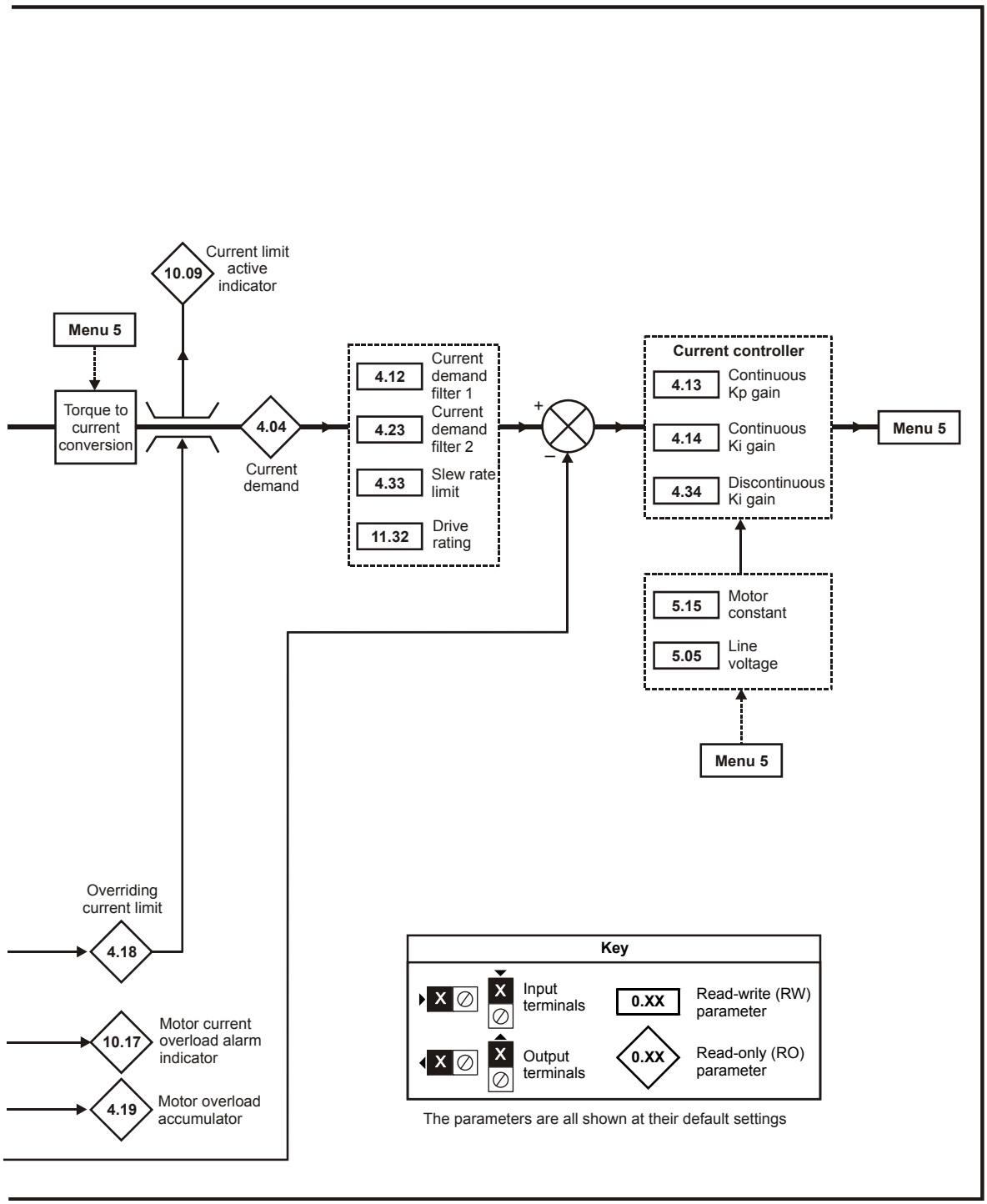

The parameters are all shown at their default settings

4.01 {di08, 0.43}	Current magnitude															
Coding	Bit	SP	FI	DE	Txt	VM	DP	ND	RA	NC	NV	PT	US	RW	BU	PS
			1			1	2	1		1		1			1	
Range	± DRIVE_CURRENT_MAX A															
Update rate	4 ms write															

The current feedback signal is derived from internal current transformers. It is used for current control and indication of the armature current, and to initiate motor protection.

4.02	Filtered current magnitude															
Coding	Bit	SP	FI	DE	Txt	VM	DP	ND	RA	NC	NV	PT	US	RW	BU	PS
			1			1	2	1		1		1			1	
Range	± DRIVE_CURRENT_MAX A															
Update rate	4 ms write															

The value of the current magnitude parameter filtered over the last 6 mains cycles.

4.03 {di07, 0.42}	Torque demand															
Coding	Bit	SP	FI	DE	Txt	VM	DP	ND	RA	NC	NV	PT	US	RW	BU	PS
			1			1	1	1		1		1				
Range	±TORQUE_PROD_CURRENT_MAX %															
Update rate	4 ms write															

The torque demand can be derived from the speed controller and/or the torque reference and offset. The units of the torque demand are % of rated torque.

4.04	Current demand															
Coding	Bit	SP	FI	DE	Txt	VM	DP	ND	RA	NC	NV	PT	US	RW	BU	PS
			1				1	1		1		1				
Range	±TORQUE_PROD_CURRENT_MAX %															
Update rate	4 ms write															

The current demand is derived from the torque demand. Provided the motor is not in current limit, the torque and current demands are the same and the drive is not operating in the field weakening region.

4.05	Motoring current limit															
Coding	Bit	SP	FI	DE	Txt	VM	DP	ND	RA	NC	NV	PT	US	RW	BU	PS
							1		1				1	1	1	
Range	0 to MOTOR1_CURRENT_LIMIT_MAX %															
Default	150.0															
Second motor parameter	Pr **21.27**															
Update rate	Background read															

The motoring current limit applies in either direction of rotation when the machine is producing motoring torque.

4.06	Regen current limit															
Coding	Bit	SP	FI	DE	Txt	VM	DP	ND	RA	NC	NV	PT	US	RW	BU	PS
							1		1				1	1	1	
Range	0 to MOTOR1_CURRENT_LIMIT_MAX %															
Default	150.0															
Second motor parameter	Pr **21.28**															
Update rate	Background read															

The regen current limit applies in either direction when the machine is producing regenerating torque.

4.07	**Symmetrical current limit**															
Coding	Bit	SP	FI	DE	Txt	VM	DP	ND	RA	NC	NV	PT	US	RW	BU	PS
							1		1				1	1	1	
Range	0 to MOTOR1_CURRENT_LIMIT_MAX %															
Default	150.0															
Second motor parameter	Pr **21.29**															
Update rate	Background read															

The motoring current limit applies in either direction of rotation when the machine is producing motoring torque. Similarly the regen current limit applies in either direction when the machine is producing regenerating torque. The symmetrical current limit can override either motoring or regenerating current limit if it is set at a lower value than either limit.

4.08	**Torque reference**															
Coding	Bit	SP	FI	DE	Txt	VM	DP	ND	RA	NC	NV	PT	US	RW	BU	PS
						1	2						1	1		
Range	±USER_CURRENT_MAX %															
Default	0.00															
Update rate	4 ms read															

4.09	**Torque offset**															
Coding	Bit	SP	FI	DE	Txt	VM	DP	ND	RA	NC	NV	PT	US	RW	BU	PS
						1	1						1	1		
Range	±USER_CURRENT_MAX %															
Default	0.0															
Update rate	4 ms read															

The torque offset is updated every 4 ms when connected to an analog input, and so Pr **4.08** should be used for fast updating if required.

4.10	**Torque offset select**															
Coding	Bit	SP	FI	DE	Txt	VM	DP	ND	RA	NC	NV	PT	US	RW	BU	PS
	1												1	1		
Default	0															
Update rate	4 ms read															

The torque offset is added to the torque reference when Pr **4.10** is one. The torque offset is updated every 4 ms when connected to an analog input, and so Pr **4.08** should be used for fast updating if required.

4.11	**Torque mode selector**															
Coding	Bit	SP	FI	DE	Txt	VM	DP	ND	RA	NC	NV	PT	US	RW	BU	PS
													1	1	1	
Range	0 to 4															
Default	0															
Update rate	4 ms read															

The value of this parameter refers to switches TM0 to TM4 on Menu 4 diagram.

When this parameter is set to 1, 2 or 3 the ramps are not active while the drive is in the run state. When the drive is taken out of the run state, but not disabled, the appropriate stopping mode is used. It is recommended that coast stopping or stopping without ramps are used. However, if ramp stop mode is used the ramp output is pre-loaded with the actual speed at the changeover point to avoid unwanted jumps in the speed reference.

0: Speed control mode

The torque demand is equal to the speed loop output.

1: Torque control

The torque demand is given by the sum of the torque reference and the torque offset, if enabled. The speed is not limited in any way, however, the drive will trip at the overspeed threshold if runaway occurs. When 'RUN FWD / RUN REV' is removed while in 'Torque mode', the drive will stop in the method selected by Pr **6.01**.

2: Torque control with speed override

The output of the speed loop defines the torque demand, but is limited between 0 and the resultant torque reference (Pr **4.08** + Pr **4.09** (if enabled)). The effect is to produce an operating area as shown below if the final speed demand and the resultant torque reference are both positive. The speed controller will try and accelerate the machine to the final speed demand level with a torque demand defined by the resultant torque reference. However, the speed cannot exceed the reference because the required torque would be negative, and so it would be clamped to zero.

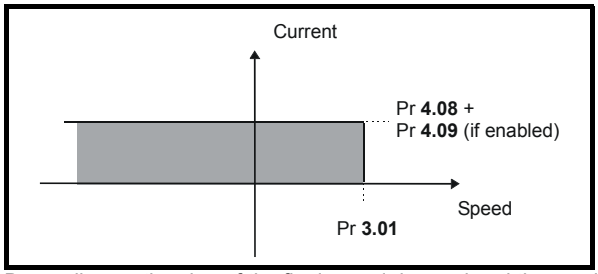

Depending on the sign of the final speed demand and the resultant torque the four areas of operation shown below are possible.

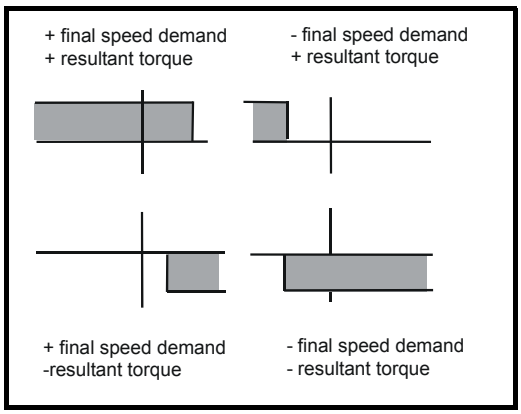

This mode of operation can be used where torque control is required, but the maximum speed must be limited by the drive.

3: Coiler/uncoiler mode

Positive final speed demand: a positive resultant torque will give torque control with a positive speed limit defined by the final speed demand. A negative resultant torque will give torque control with a negative speed limit of -5 rpm.

Negative final speed demand: a negative resultant torque will give torque control with a negative speed limit defined by the final speed demand. A positive resultant torque will give torque control with a positive speed limit of +5 rpm.

Example of coiler operation:

This is an example of a coiler operating in the positive direction. The final speed demand is set to a positive value just above the coiler reference speed. If the resultant torque demand is positive the coiler operates with a limited speed, so that if the material breaks the speed does not exceed a level just above the reference. It is also possible to decelerate the coiler with a negative resultant torque demand. The coiler will decelerate down to -5 rpm until a stop is applied. The operating area is shown in the following diagram:

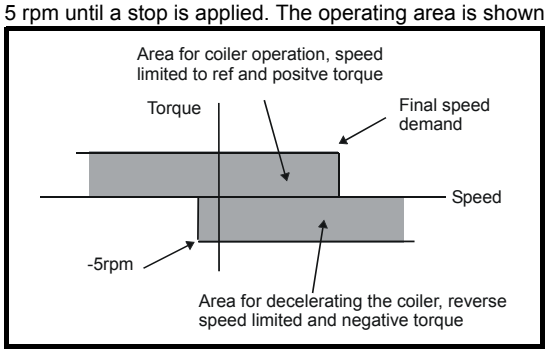

Example of uncoiler operation:

This is an example for an uncoiler operating in the positive direction. The final speed demand should be set to a level just above the maximum normal speed. When the resultant torque demand is negative the uncoiler will apply tension and try and rotate at 5 rpm in reverse, and so take up any slack. The uncoiler can operate at any positive speed applying tension. If it is necessary to accelerate the uncoiler a positive resultant torque demand is used. The speed will be limited to the final speed demand. The operating area is the same as that for the coiler and is shown below:

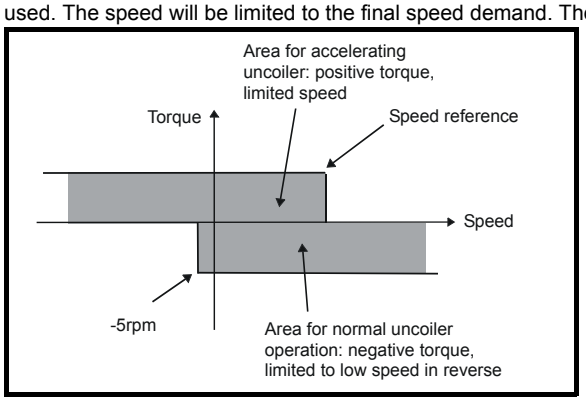

4: Speed control with torque feed-forward

The drive operates under speed control, but a torque value may be added to the output of the speed controller. This can be used to improve the regulation of systems where the speed loop gains need to be low for stability.

4.12	**Current demand filter 1**															
Coding	Bit	SP	FI	DE	Txt	VM	DP	ND	RA	NC	NV	PT	US	RW	BU	PS
							1						1	1	1	
Range	0.0 to 25.0 ms															
Default	6.0															
Update rate	Background read															

A first order filter, with a filter defined by this parameter, is provided on the current demand to reduce acoustic noise and vibration produced as a result of position feedback quantization noise. The filter introduces a lag in the speed loop, and so the speed loop gains may need to be reduced to maintain stability as the filter is increased. Alternative filters can be selected depending on the value of the speed controller gain selector (Pr **3.16**). If Pr **3.16** = 0 Pr **4.12** is used, if Pr **3.16** = 1 Pr **4.23** is used.

4.13	**Continuous current controller Kp gain**															
Coding	Bit	SP	FI	DE	Txt	VM	DP	ND	RA	NC	NV	PT	US	RW	BU	PS
									1				1	1	1	
Range	0 to 4000															
Default	100															
Second motor parameter	Pr **21.13**															
Update rate	Background read															

The proportional gain Kp (Pr **4.13**) is the most critical value in controlling the performance of the current controllers. This value can be set using the auto-tuning feature (see Pr **5.12** {**SE13, 0.34**}).

It is possible to increase the proportional gain (Kp) to reduce the response time of the current controllers. If Kp is increased by a factor of 1.5 then the response to a step change of reference will give 12.5 % overshoot. It is recommended that Ki be increased in preference to Kp.

The gain values that are calculated by the autotune system should give the best response with minimal overshoot. If required the gains can be adjusted to improve performance.

Pr **4.13** = 3393 x L x f x Imax / V rms

Where :

L is the load inductance in Henries
R is the load resistance in ohms
f is the supply frequency in Hertz
Imax is the peak load current (including any overload) in amps
V rms is the line-to-line supply voltage in volts.

4.14	Continuous current controller Ki gain															
Coding	Bit	SP	FI	DE	Txt	VM	DP	ND	RA	NC	NV	PT	US	RW	BU	PS
									1				1	1	1	
Range	0 to 4000															
Default	50															
Second motor parameter	Pr **21.14**															
Update rate	Background read															

The proportional gain Kp (Pr **4.13**) is the most critical value in controlling the performance of the current controllers. The value can be set by auto-tuning (see Pr **5.12** {**SE13, 0.34**}).

Pr **4.14** = 1697 x L x f x Imax / V rms

Where :

L is the load inductance in Henries
R is the load resistance in ohms
f is the supply frequency in Hertz
Imax is the peak load current (including any overload) in amps
V rms is the line-to-line supply voltage in volts.

The gain values that are calculated by the autotune system give the best response with minimal overshoot. If required the gains can be adjusted to improve performance as follows:

1. The integral gain (Ki) can be used to improve the performance of the current controllers by reducing the effects of non-linearity. These effects will be more significant for drives with higher current ratings and higher voltage ratings. If Ki is increased by a factor of 4 it is possible to get up to 10 % overshoot in response to a step change of current reference. For high performance applications, it is recommended that Ki is increased by a factor of 4 from the autotuned values.
2. It is possible to increase the proportional gain (Kp) to reduce the response time of the current controllers. If Kp is increased by a factor of 1.5 then the response to a step change of reference will give 12.5 % overshoot. It is recommended that Ki is increased in preference to Kp.

4.15	Thermal filter															
Coding	Bit	SP	FI	DE	Txt	VM	DP	ND	RA	NC	NV	PT	US	RW	BU	PS
													1	1	1	
Range	0.0 to 3000.0															
Default	89.0															
Second motor parameter	Pr **21.16**															
Update rate	Background read															

4.16	Thermal protection mode															
Coding	Bit	SP	FI	DE	Txt	VM	DP	ND	RA	NC	NV	PT	US	RW	BU	PS
	1												1	1	1	
Range	0 to 3															
Default	0															
Update rate	Background read															

Pr **4.16** = 0 - Drive trips when estimated motor temperature reaches 100 %.

Pr **4.16** = 1 - Drive current limit is limited to 100 % when estimated motor temperature reaches 100 %.

Pr **4.16** = 2 - Drive trips when estimated motor temperature reaches 100 % and accumulator is reset at power-up.

Pr 4.16 = 3 - Drive current limit is limited to 100 % when estimated motor temperature reaches 100 % and accumulator is reset at power-up.

The motor is modelled thermally in a way that is equivalent to the electrical circuit shown as follows.

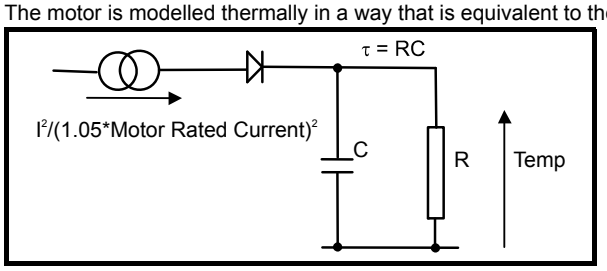

The temperature of the motor as a percentage of maximum temperature, with a constant current magnitude of I, and constant value of motor rated current (set by Pr **5.07** {**SE07, 0.28**} or Pr **21.07**) after time t is given by

$$\text{Temp} = [I^2 / (1.05 \times \text{Motor rated current})^2]\ (1 - e^{-t/\tau}) \times 100\ \%$$

This assumes that the maximum allowed motor temperature is produced by 1.05 x Motor rated current and that τ is the thermal filter of the point in the motor that reaches its maximum allowed temperature first. τ is defined by Pr **4.15.** The estimated motor temperature is given by Pr **4.19** as a percentage of maximum temperature. If Pr **4.15** has a value between 0.0 and 1.0 the thermal filter is taken as 1.0.

When the estimated temperature reaches 100 % the drive takes some action depending on the setting of Pr **4.16**. If Pr **4.16** is 0, the drive trips when the threshold is reached. If Pr **4.16** is 1, the current limit is reduced to 100 % when the temperature is 100 %. The current limit is set back to the user defined level when the temperature falls below 95 %.

The time for some action to be taken by the drive from cold with constant motor current is given by:

T_{trip} = -(Pr **4.15**) x ln(1 - (1.05 x Pr **5.07** {**SE07, 0.28**} / Pr **4.01** {**di08, 0.43**})^2)

Alternatively the thermal filter can be calculated from the trip time with a given current from:

Pr **4.15** = -T_{trip} / ln(1 - (1.05 / Overload)^2)

For example, if the drive should trip after supplying 150 % overload for 60 seconds then

Pr **4.15** = -60 / ln(1 - (1.05 / 1.50)^2) = 89

Each time the rated current defined by Pr **5.07** {**SE07, 0.28**} or Pr **21.07** (depending on the motor selected) is altered, the accumulator is reset to zero.

NOTE

With Pr **4.16** set to 1 or 3 when in slave mode Pr **5.43** = 8 (P.Slave) has no effect on the drive thermal protection.

4.18	**Overriding current limit**															
Coding	Bit	SP	FI	DE	Txt	VM	DP	ND	RA	NC	NV	PT	US	RW	BU	PS
						1	1	1		1		1			1	
Range	0 to TORQUE_PROD_CURRENT_MAX %															
Update rate	Background write															

The current limit applied at any time depends on whether the drive is motoring or regenerating and also on the level of the symmetrical current limit. Pr **4.18** gives the limit level that applies at any instant.

4.19	**Overload accumulator**															
Coding	Bit	SP	FI	DE	Txt	VM	DP	ND	RA	NC	NV	PT	US	RW	BU	PS
							1	1		1		1			1	1
Range	0 to 100.0 %															
Update rate	Background write															

See Pr **4.16** on page 64.

4.20	**Percentage load**															
Coding	Bit	SP	FI	DE	Txt	VM	DP	ND	RA	NC	NV	PT	US	RW	BU	PS
			1			1	1	1		1		1				
Range	±USER_CURRENT_MAX %															
Update rate	Background write															

This parameter displays the current magnitude (Pr **4.01** {**di08, 0.43**}) as a percentage of rated active current. Positive values indicate motoring and negative values indicate regenerating.

4.22	**Inertia compensation enable**															
Coding	Bit	SP	FI	DE	Txt	VM	DP	ND	RA	NC	NV	PT	US	RW	BU	PS
	1												1	1		
Default	0															
Update rate	Background read															

If this parameter is set to one, the drive calculates a torque reference from the motor and load inertia (Pr **3.18**) and the rate of change of speed reference. The torque reference is added to the speed controller output to provide inertia compensation. This can be used in speed or torque control applications to produce the torque required to accelerate or decelerate the load inertia.

4.23	Current demand filter 2															
Coding	Bit	SP	FI	DE	Txt	VM	DP	ND	RA	NC	NV	PT	US	RW	BU	PS
							1						1	1	1	
Range	0.0 to 25.0 ms															
Default	6.0															
Update rate	Background read															

The current demand filter filter is defined by this parameter if the speed gain select (Pr **3.16**) is one.

4.24	User current maximum scaling															
Coding	Bit	SP	FI	DE	Txt	VM	DP	ND	RA	NC	NV	PT	US	RW	BU	PS
						1	1		1				1	1	1	
Range	0.0 to TORQUE_PROD_CURRENT_MAX %															
Default	150.0															
Update rate	Background read															

The maximum for Pr **4.08** and Pr **4.20** is defined by this parameter

4.27	Current taper 1 threshold															
Coding	Bit	SP	FI	DE	Txt	VM	DP	ND	RA	NC	NV	PT	US	RW	BU	PS
						1	1						1	1	1	
Range	0.0 to 10,000.0 rpm															
Default	10,000 rpm															
Update rate	Background read															

Sets a threshold value of speed feedback, beyond which Pr **4.31** changes to 1 to indicate that the threshold has been exceeded, and is the starting point for taper 1. The current limit reduces, as a function of speed, to an end point defined by Pr **4.29**.

The output of the taper block controls Pr **4.18**.

If only 1 taper is used, it must be Taper 1. If both are used, Taper 1 must be first. Refer to the diagrams under Pr **4.32**.

4.28	Current taper 2 threshold															
Coding	Bit	SP	FI	DE	Txt	VM	DP	ND	RA	NC	NV	PT	US	RW	BU	PS
						1	1						1	1	1	
Range	0.0 to 10,000 rpm															
Default	10,000 rpm															
Update rate	Background read															

Sets a threshold value of speed feedback, beyond which Pr **4.32** changes to 1 to indicate that the threshold has been exceeded, and is the starting point for taper 2. The current limit reduces, as a function of speed, to an end point defined by Pr **4.30**.

The output of the taper block controls Pr **4.18**.

If only 1 taper is used, it must be Taper 1. If both are used, Taper 1 must be first. Refer to the diagrams under Pr **4.32**.

4.29	Current taper 1 end point															
Coding	Bit	SP	FI	DE	Txt	VM	DP	ND	RA	NC	NV	PT	US	RW	BU	PS
							1						1	1	1	
Range	0 to 1000.0 %															
Default	1000.0 %															
Update rate	Background read															

Defines the current at the end of taper 1.

4.30	**Current taper 2 end point**															
Coding	Bit	SP	FI	DE	Txt	VM	DP	ND	RA	NC	NV	PT	US	RW	BU	PS
							1						1	1	1	
Range	0 to 1000.0 %															
Default	1000.0 %															
Update rate	Background read															

Defines the current at the end of taper 2.

4.31	**Taper threshold 1 exceeded**															
Coding	Bit	SP	FI	DE	Txt	VM	DP	ND	RA	NC	NV	PT	US	RW	BU	PS
	1															
Update rate	Background read															

Indicates when speed feedback has exceeded threshold 1.

4.32	**Taper threshold 2 exceeded**															
Coding	Bit	SP	FI	DE	Txt	VM	DP	ND	RA	NC	NV	PT	US	RW	BU	PS
	1															
Update rate	Background write															

Indicates when speed feedback has exceeded threshold 2.

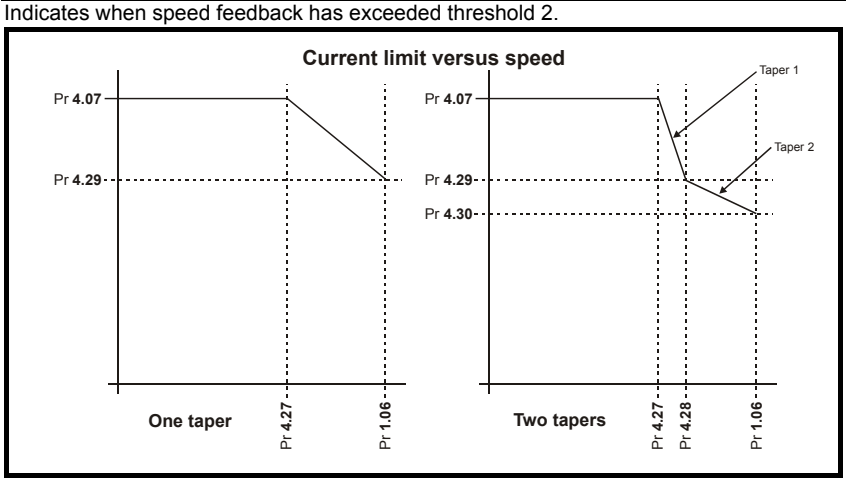

4.33	**Slew rate limit**															
Coding	Bit	SP	FI	DE	Txt	VM	DP	ND	RA	NC	NV	PT	US	RW	BU	PS
													1	1	1	
Range	0 to 60000 $\%s^{-1}$															
Default	7000															
Update rate	Background read															

Applies a slew rate limit to the output of the current demand filter. This will then limit the maximum rate of change of current demand. Older types of motor, especially if of non-laminated construction, may have a tendency to flash over if the rate of change of current is too high for the inherent lag of the interpole winding.

Pr **4.33** is defined as allowed per unit change per second.

Slew rate in amps s^{-1} = Pr **4.33** x DRIVE_CURRENT_MAX

4.34	Discontinuous current controller Ki gain															
Coding	Bit	SP	FI	DE	Txt	VM	DP	ND	RA	NC	NV	PT	US	RW	BU	PS
									1				1	1	1	
Range	0 to 4000															
Default	200															
Second motor parameter	Pr **21.12**															
Update rate	Background read															

This parameter is set to correct any errors in the prediction of firing angle in the discontinuous current region.

Pr **4.34** = 1131 x R x Imax / V rms

Where :

L is the load inductance in Henries
R is the load resistance in ohms
f is the supply frequency in Hertz
Imax is the peak load current (including any overload) in amps
V rms is the line-to-line supply voltage in volts.

4.35	Extra safe bridge change															
Coding	Bit	SP	FI	DE	Txt	VM	DP	ND	RA	NC	NV	PT	US	RW	BU	PS
	1												1	1		
Default	0															
Update rate	Background read															

When enabled an additional safety margin of 1 supply cycle is added to the bridge changeover logic. This may be required for highly inductive loads, such as a motor field.

4.36	Reduced hysteresis for bridge change over															
Coding	Bit	SP	FI	DE	Txt	VM	DP	ND	RA	NC	NV	PT	US	RW	BU	PS
	1												1	1		
Default	0															
Update rate	Background read															

There is hysteresis on bridge change over to prevent oscillation between the two bridges under lightly loaded conditions. In applications which require fine control of the current the bridge change over hysteresis can be reduced from 1.6 % to 0.2 % of the drive maximum current by setting this parameter.

5.6 Menu 5: Motor and field control

Figure 5-5 Menu 5 field control logic diagram

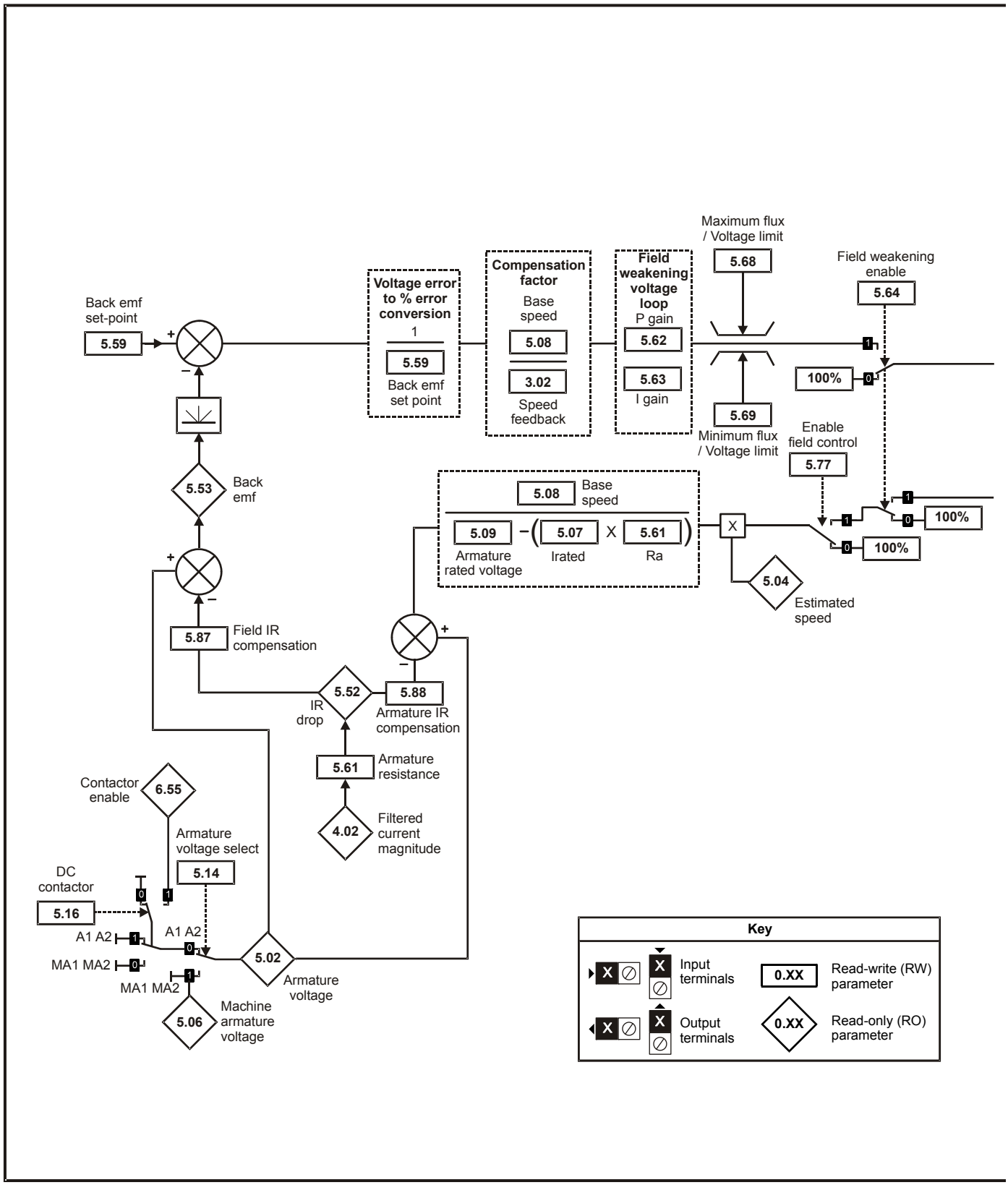

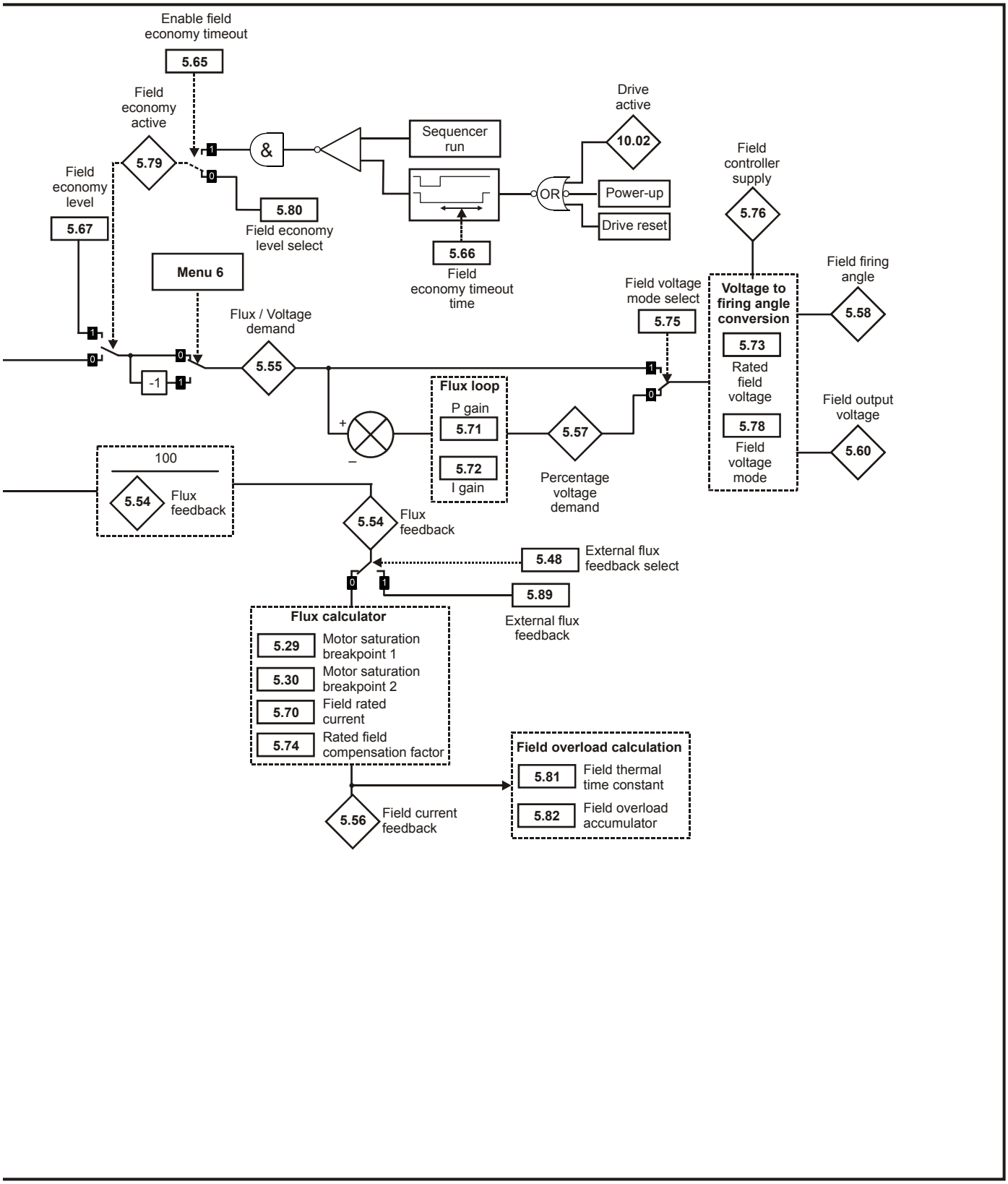
Enable field economy timeout
5.65
Field economy active
5.79
Field economy level
5.67
5.80
Field economy level select
&
Sequencer run
OR
Drive active
10.02
Power-up
Drive reset
5.66
Field economy timeout time
Field controller supply
5.76
Menu 6
Flux / Voltage demand
5.55
-1
Field voltage mode select
5.75
Voltage to firing angle conversion
5.73
Rated field voltage
5.78
Field voltage mode
Field firing angle
5.58
Field output voltage
5.60
Flux loop
P gain
5.71
5.72
I gain
5.57
Percentage voltage demand
100
5.54
Flux feedback
5.54
Flux feedback
5.48
External flux feedback select
5.89
External flux feedback
Flux calculator
5.29 Motor saturation breakpoint 1
5.30 Motor saturation breakpoint 2
5.70 Field rated current
5.74 Rated field compensation factor
Field overload calculation
5.81 Field thermal time constant
5.82 Field overload accumulator
5.56
Field current feedback

Figure 5-6 Menu 5 armature control logic diagram

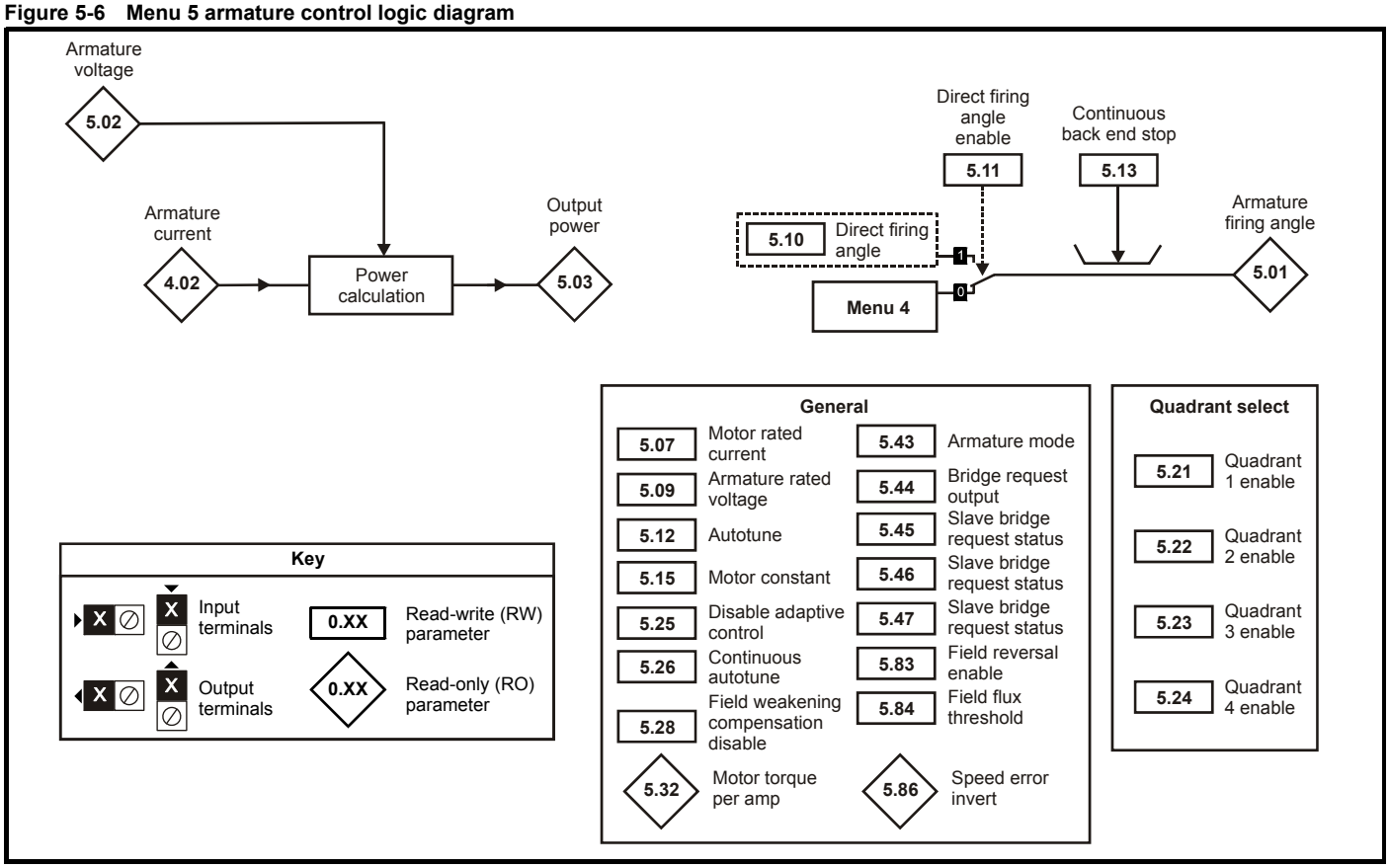

5.01	Armature firing angle															
Coding	Bit	SP	FI	DE	TE	VM	DP	ND	RA	NC	NV	PT	US	RW	BU	PS
			1				1	1		1		1			1	
Range	0 to 175.0°															
Update rate																

0 equals fully phased forward.

5.02 {di02, 0.45}	Armature voltage															
Coding	Bit	SP	FI	DE	TE	VM	DP	ND	RA	NC	NV	PT	US	RW	BU	PS
			1			1		1		1		1				
Range	±ARMATURE_VOLTAGE_MAX V															
Update rate	Background write															

The average measured DC output voltage seen across the drive A1 and A2 terminals or the average measured DC output voltage seen across the motor. Selected by Pr **5.14**.

The armature voltage feedback has a resolution of 10-bit plus sign.

5.03	Output power															
Coding	Bit	SP	FI	DE	TE	VM	DP	ND	RA	NC	NV	PT	US	RW	BU	PS
			1			1	2	1		1		1				
Range	±POWER_MAX kW															
Update rate	Background write															

Power = Armature voltage x Armature current.

5.04	**Estimated speed**															
Coding	Bit	SP	FI	DE	TE	VM	DP	ND	RA	NC	NV	PT	US	RW	BU	PS
			1			1	1	1		1		1				
Range	-SPEED_MAX to SPEED_MAX rpm															
Update rate	Background write															

The software uses the following model to estimate the speed of the motor. If both the internal and external field controllers are disabled, for example when a separately supplied field is used, then the flux feedback is assumed to be 100 %.

$$\textbf{Pr 5.04} = \frac{\textbf{Pr 5.53} \times \textbf{100} \times \textbf{Pr 5.08}}{[\textbf{Pr 5.09} - (\textbf{Pr 5.07} \times \textbf{Pr 5.61})] \times \textbf{Pr 5.54}}$$

Where:

Pr **5.04** = estimated speed
Pr **5.53** = back emf
Pr **5.08** = base speed
Pr **5.09** = rated voltage
Pr **5.07** = motor rated current
Pr **5.61** = armature resistance
Pr **5.54** = flux feedback

5.05	**Line voltage**															
Coding	Bit	SP	FI	DE	TE	VM	DP	ND	RA	NC	NV	PT	US	RW	BU	PS
			1					1		1		1			1	
Range	0 to 1000 V rms AC															
Update rate	Background write															

The voltage measured at the L1, L2 and L3 terminals.

5.06	**Machine armature voltage**															
Coding	Bit	SP	FI	DE	TE	VM	DP	ND	RA	NC	NV	PT	US	RW	BU	PS
			1			1		1		1		1				
Range	±ARMATURE_VOLTAGE_MAX V															
Update rate	Background write															

The average measured DC output voltage seen across the motor, as read from the Machine feedback terminals (MA1 and MA2).

5.07 {SE07, 0.28}	**Motor rated current**															
Coding	Bit	SP	FI	DE	TE	VM	DP	ND	RA	NC	NV	PT	US	RW	BU	PS
						1	1		1				1	1	1	
Range	0 to RATED_CURRENT_MAX A															
Default	RATED_CURRENT_MAX															
Second motor parameter	Pr **21.07**															
Update rate	Background read															

The rated current should be set at the motor nameplate value for rated current. The value of this parameter is used in the following:

Current limits
Motor thermal protection

5.08 {SE08, 0.29}	Base speed															
Coding	Bit	SP	FI	DE	TE	VM	DP	ND	RA	NC	NV	PT	US	RW	BU	PS
							1						1	1	1	
Range	0.0 to 10,000.0 rpm															
Default	1000															
Second motor parameter	Pr **21.06**															
Update rate	Background read															

The rated speed defines the base speed of the motor. It is also used for:

1. The calculation of 'estimated speed'.
2. Used by the rotating autotune function to determine the speed levels for measuring the field saturation breakpoints.
3. Used to determine the speed used in the auto tuning inertia test (see Pr **5.12** {**SE13, 0.34**}).

5.09 {SE06, 0.27}	Armature rated voltage															
Coding	Bit	SP	FI	DE	TE	VM	DP	ND	RA	NC	NV	PT	US	RW	BU	PS
						1			1				1	1	1	
Range	0 to ARMATURE_VOLTAGE_MAX Vdc															
Default	For 480 V Drive: Eur: 440, USA 500 For 575 V Drive: Eur: 630, USA 630 For 690 V Drive: Eur: 760, USA 760															
Second motor parameter	Pr **21.09**															
Update rate	Background read															

5.10	Direct firing angle															
Coding	Bit	SP	FI	DE	TE	VM	DP	ND	RA	NC	NV	PT	US	RW	BU	PS
							1							1	1	
Range	0 to 165.0°															
Default	165.0															
Update rate	6 times mains frequency															

This parameter is set to 165.0° at power-up.

A value of 165° corresponds to the fully phased back condition and therefore zero output voltage.

WARNING

A value of 0 in the firing angle Pr **5.10** corresponds to fully phased forward and therefore maximum output voltage.

5.11	Direct firing angle enable															
Coding	Bit	SP	FI	DE	TE	VM	DP	ND	RA	NC	NV	PT	US	RW	BU	PS
	1												1	1		
Default	0															
Update rate	Background read															

When enabled, the firing angle Pr **5.01** is controlled by Pr **5.10**. This mode is valuable for system diagnosis, particularly where instability is present, since it allows the drive to operate without the influence of either the speed loop or the current loop, thereby eliminating their effect upon the system.

WARNING

This parameter must be used with caution. When the firing angle is controlled directly by Pr **5.10** there is no protection against excessive acceleration, output voltage or current other than the instantaneous over current trip. Also take care to reset Pr **5.11** to 0 after the completion of tests.

5.12 {SE13, 0.34}	**Autotune**															
Coding	Bit	SP	FI	DE	TE	VM	DP	ND	RA	NC	NV	PT	US	RW	BU	PS
										1				1	1	
Range	0 to 4															
Default	0															
Update rate	Background read															

NOTE

Rotating Autotune (Pr **5.12** = 2, 3 or 4) is only available when tacho or encoder feedback are selected.

If this parameter is set to a non-zero value, the drive is enabled and a run command is applied in either direction the drive performs an autotune test. All tests that rotate the motor are carried out in the forward direction if Pr **1.12** {**di12, 0.47**} = 0 or the reverse direction if Pr **1.12** {**di12, 0.47**} = 1. For example, if the test is initiated by applying run reverse (Pr **6.32** = 1) the test is performed in the reverse direction. The test will not start unless the drive is disabled before the test is initiated by applying the enable or run, i.e. it will not start if the drive is in the stop state. It is not possible to go into the stop state if Pr **5.12** {**SE13, 0.34**} has a non-zero value.

When the test is completed successfully the drive is disabled and will enter the inhibit state. The motor can only be restarted if the enable is removed either from the enable input, or Pr **6.15** is set to zero or from the control word (Pr **6.42**) if it is active.

Value	Autotune function
0	None
1	Static autotune for current loop gains
2	Spinning autotune for rated field compensation factor and motor saturation break points
3	Spinning autotune for inertia measurement
4	Spinning autotune for motor saturation break points

Static autotune for current loop gains
When this operation is performed, the drive will estimate the following, with respect to the selected motor map, and store the values:

Motor constant (Pr **5.15**)
Continuous proportional gain (Pr **4.13**)
Continuous integral gain (Pr **4.14**)
Discontinuous integral gain (Pr **4.34**)
Back EMF set point (Pr **5.59**)
Armature resistance (Pr **5.61**)
Flux loop P gain (Pr **5.71**)
Flux loop I gain (Pr **5.72**)

Spinning autotune for rated field compensation factor and motor saturation break points
When this operation is performed, the drive will estimate the following, with respect to the selected motor map, and store the values:

Motor saturation break points (Pr **5.29**, Pr **5.30**), and *Rated field compensation factor* (Pr **5.74**) by spinning the motor at 25 % of it's *Base speed* (Pr **5.08** {**SE08, 0.29**})

Spinning autotune for inertia measurement

- The drive attempts to accelerate the motor in the forward direction up to 3 /4 x rated load rpm and then back to standstill. Several attempts may be made, starting with rated torque/16, and then increasing the torque progressively to x $^1/_8$, x $^1/_4$, x $^1/_2$ and x 1 rated torque if the motor cannot be accelerated to the required speed. 5s acceleration time is allowed during the first four attempts and 60 s on the final attempt. If the required speed is not achieved on the final attempt the test is aborted and a tuNE1 trip is initiated. If the test is successful the acceleration and deceleration times are used to calculate the motor and load inertia which is written to Pr **3.18**.
- Pr **3.18** is saved to EEPROM.

The calculated value of inertia is dependant on the value of the motor torque per amp (Pr **5.32**). If the inertia is used for automatic speed loop gain setup the calculated gains will not be affected because Kt is also used in these calculations and any inaccuracy cancels out.

The test algorithm attempts to remove the effect of any load on the motor other than the torque required to accelerate and decelerate the motor, i.e. friction and windage losses, static torque load etc. Provided the average torque during acceleration and the average torque during deceleration are the same the effect of the additional torque is removed and the inertia value is calculated correctly.

Spinning autotune for motor saturation break points
When this operation is performed the drive will perform an estimation of *Motor saturation break points* (Pr **5.29**, Pr **5.30**) by spinning the motor at 25 % of its *Base speed* (Pr **5.08**) with respect to the selected motor map and store the values.

5.13	Continuous back end stop															
Coding	Bit	SP	FI	DE	TE	VM	DP	ND	RA	NC	NV	PT	US	RW	BU	PS
							1						1	1	1	
Range	0 to 165.0 deg															
Default	165.0 deg															
Update rate	Background read															

The firing angle end stop may be too close to the voltage crossover point. Parameter allows the user to increase the safety margin during regeneration but the maximum regenerated armature voltage will be reduced.

5.14	Armature voltage select															
Coding	Bit	SP	FI	DE	TE	VM	DP	ND	RA	NC	NV	PT	US	RW	BU	PS
	1												1	1		
Default	0															
Update rate	Background read															

When 0, the armature voltage is a measurement which is dependent on the setting of Pr **5.16**.

When 1, the armature voltage is measured across motor terminals MA1 and MA2.

5.15	Motor constant															
Coding	Bit	SP	FI	DE	TE	VM	DP	ND	RA	NC	NV	PT	US	RW	BU	PS
							1						1	1	1	
Range	0 to 100.0 %															
Default	50 %															
Second motor parameter	Pr **21.11**															
Update rate	Background read															

This parameter is used to scale the current demand such that the control loop correctly predicts the firing angle in the discontinuous current region. This should be automatically setup by autotune.

Pr **5.15** = 29.5 x V rms / (L x f x Imax)

Where :

L is the load inductance in Henries
R is the load resistance in ohms
f is the supply frequency in Hertz
Imax is the peak load current (including any overload) in amps
V rms is the line-to-line supply voltage in volts.

5.16	DC contactor															
Coding	Bit	SP	FI	DE	TE	VM	DP	ND	RA	NC	NV	PT	US	RW	BU	PS
	1												1	1		
Default	0															
Update rate	Background read															

The source for the armature voltage feedback is determined as follows:

Pr 5.14	Pr 5.16	Pr 6.55	Armature voltage selected
0	0	0	A1, A2
0	0	1	MA1, MA2
0	1	0	A1, A2
0	1	1	MA1, MA2
1	0	0	
1	0	1	
1	1	0	
1	1	1	

5.21	**Quadrant 1 Enable**															
Coding	Bit	SP	FI	DE	TE	VM	DP	ND	RA	NC	NV	PT	US	RW	BU	PS
													1	1	1	
Default	1															
Update rate	Background read															

Quadrant 1 operation is defined as motoring in the forward direction, speed and torque both having positive values.

5.22	**Quadrant 2 Enable**															
Coding	Bit	SP	FI	DE	TE	VM	DP	ND	RA	NC	NV	PT	US	RW	BU	PS
													1	1	1	
Default	1															
Update rate	Background read															

Operation in quadrant 2 is defined as regenerating in the reverse direction, where speed will be negative and torque positive.

5.23	**Quadrant 3 Enable**															
Coding	Bit	SP	FI	DE	TE	VM	DP	ND	RA	NC	NV	PT	US	RW	BU	PS
						1			1				1	1	1	
Range	0 to QUADRANT_MAX															
Default	1															
Update rate	Background read															

Quadrant 3 operation is defined as motoring in the reverse direction, speed and torque both having negative values.

5.24	**Quadrant 4 Enable**															
Coding	Bit	SP	FI	DE	TE	VM	DP	ND	RA	NC	NV	PT	US	RW	BU	PS
						1			1				1	1	1	
Range	0 to QUADRANT_MAX															
Default	1															
Update rate	Background read															

Operation in quadrant 4 is defined as regenerating in the forward direction, where speed will be positive and torque negative.

5.25	**Disable adaptive control**															
Coding	Bit	SP	FI	DE	TE	VM	DP	ND	RA	NC	NV	PT	US	RW	BU	PS
	1												1	1		
Default	0															
Update rate	Background read															

When adaptive control is enabled, which is the default status, the current loop employs two different algorithms, one of which applies high gain in the discontinuous current region. This is unsuitable for some applications, such as non-motor loads, for which adaptive control should be disabled.

5.26	**Continuous autotune**															
Coding	Bit	SP	FI	DE	TE	VM	DP	ND	RA	NC	NV	PT	US	RW	BU	PS
	1												1	1		
Default	0															
Update rate	Background read															

When set, enables the continuous auto tune which continuously monitors the motor ripple and adjusts *Motor constant* (Pr **5.15**), *Continuous proportional gain* (Pr **4.13**) and *Discontinuous integral gain* (Pr **4.34**) for optimum performance. The commissioning / start-up autotune should still be carried out because *Continuous integral gain* (Pr **4.14**) is not set by the continuous autotune.

Calculation of the gains is suspended when the voltage field weakening voltage loop becomes active so that the gains are not increased when the field is weakened.

5.28	Field weakening compensation disable															
Coding	Bit	SP	FI	DE	TE	VM	DP	ND	RA	NC	NV	PT	US	RW	BU	PS
	1												1	1		
Default	Eur 0, USA 1															
Update rate	Background read															

When the flux in the motor is reduced below its rated level the level of torque producing current required for a given amount of shaft torque is higher than the rated level. In speed control the compensation prevents gain reduction at higher speeds. In torque control the compensation maintains the torque at the correct level for a given torque demand. In some applications using speed control it may be desirable to have a reduction of gain as the motor flux is reduced to maintain stability. If this is required, Pr **5.28** should be set to one.

5.29	Motor saturation breakpoint 1															
Coding	Bit	SP	FI	DE	TE	VM	DP	ND	RA	NC	NV	PT	US	RW	BU	PS
													1	1	1	
Range	0 to 100 % of rated flux															
Default	50															
Second motor parameter	Pr **21.25**															
Update rate	Background read															

See Pr **5.30** for description.

5.30	Motor saturation breakpoint 2															
Coding	Bit	SP	FI	DE	TE	VM	DP	ND	RA	NC	NV	PT	US	RW	BU	PS
													1	1	1	
Range	0 to 100 % of rated flux															
Default	75															
Second motor parameter	Pr **21.26**															
Update rate	Background read															

When the motor is operated in the field weakening voltage region, the relationship between field current and the level of flux can be non-linear.

The drive can include the effects of saturation by representing the flux producing current to flux characteristic as a series of three lines as shown below:

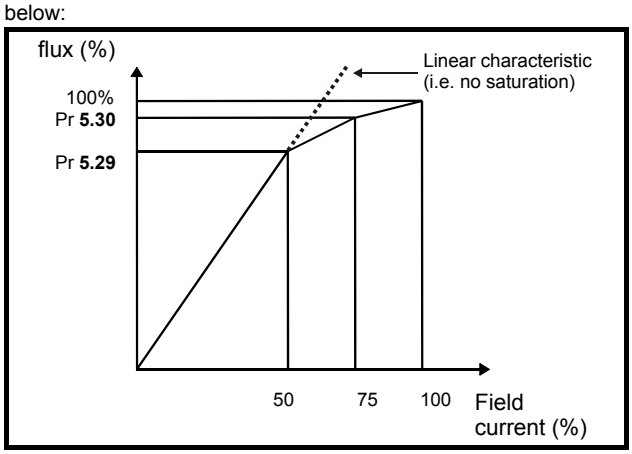

If Pr **5.29** and Pr **5.30** have their default values of 50 and 75, the characteristic becomes one line and there will be a linear relationship between the drive estimate of flux and the flux producing current. If Pr **5.29** and Pr **5.30** are increased above 50 and 75 the drive estimate of flux can include the effect of non-linearity. It is unlikely that information will be available to set up these parameters, and so the values are determined during the rotating autotune test.

5.32	Motor torque per amp (Kt)															
Coding	Bit	SP	FI	DE	TE	VM	DP	ND	RA	NC	NV	PT	US	RW	BU	PS
							3	1							1	
Range	0.00 to 50.000 N m A^{-1}															
Update rate	Background (1s) write															

This parameter shows the motor torque per amp used to calculate the speed controller gains when the automatic setup methods are active (i.e. Pr **3.17** = 1 or 2).

The drive calculates the motor torque per amp using the motor parameters as shown.

$$Kt = \frac{V_{Arated} - I_{Arated} \times Ra}{\text{Rated speed (rad/s)}}$$

5.43	Armature mode															
Coding	Bit	SP	FI	DE	TE	VM	DP	ND	RA	NC	NV	PT	US	RW	BU	PS
					1								1	1	1	
Range	0 to 8															
Default	0															
Update rate	Read on reset. Only implemented when drive is inactive.															

Parameter that contains the nine armature modes. This function is only available from firmware version V01.06.00 user and V01.09 power.

Number	Text	Description
0	Std	Normal (1Q or 4Q)
1	P.1br	Parallel - 1 bridge. Current loop gains reduced by half. No bridge lock-out.
2	P.2br12P	Parallel - 2 bridge - 12 pulse
3	P.2br24P	Parallel - 2 bridge - 24 pulse
4	FrEE	Not used
5		Not used
6		Not used
7	P.cont	Parallel 6P master
8	P.SLAuE	Parallel 6P slave

Figure 5-7 Parallel 12 Pulse

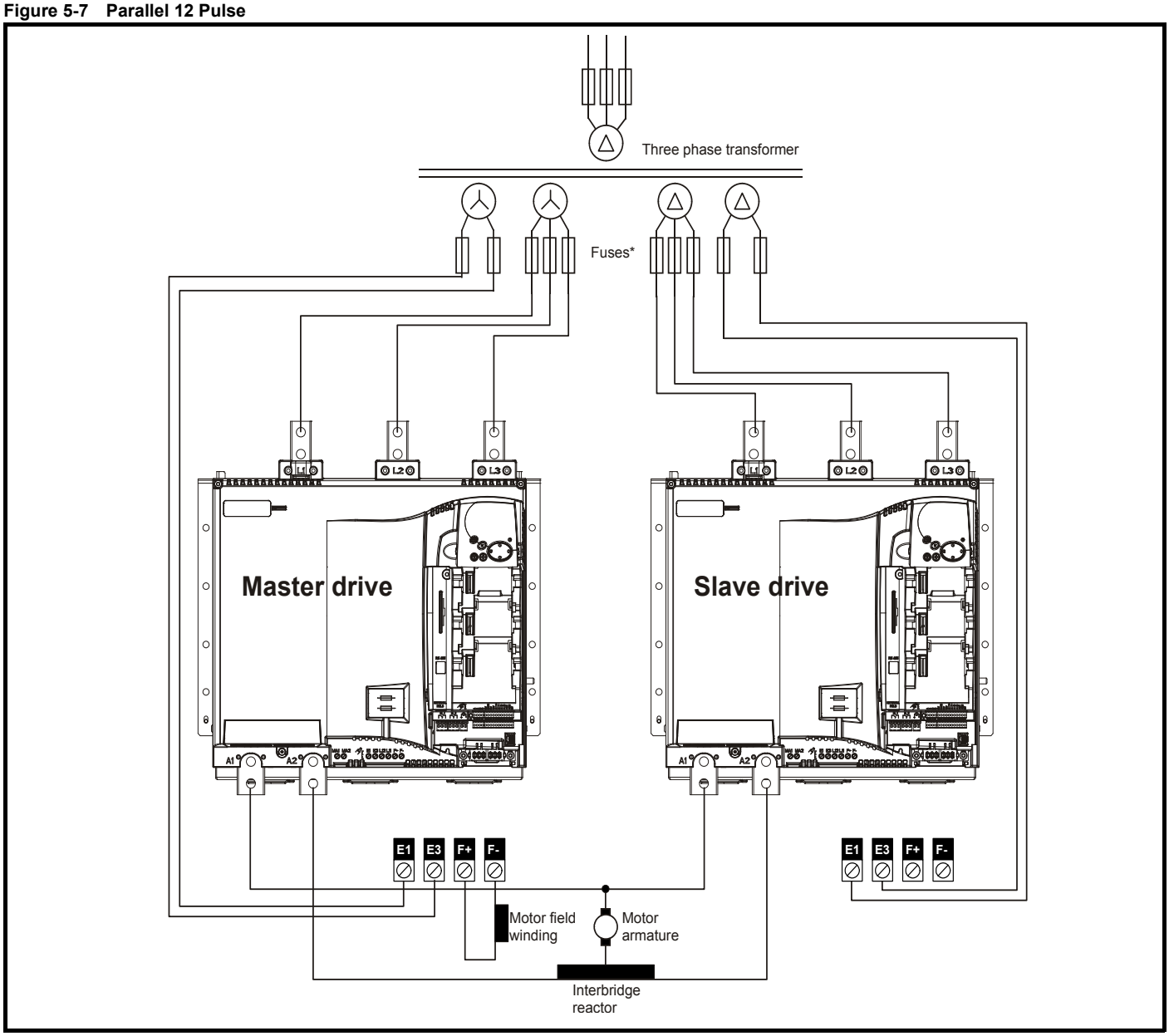

*For fuse information please refer to section 4.6 in the *Mentor MP User Guide*.

To configure the drives for use in a parallel 12 pulse speed control system, they should be programmed so that the master drive is set up in speed control mode (Pr **4.11** = 0), and the slave drive is programmed in torque control mode (Pr **4.11** = 1). The final current demand (Pr **4.04**) on the master drive has to be fed in to the slave drive torque reference (Pr **4.08**). This current demand signal can be transferred between the drives using either an analog input / output, communication module or by using CT Sync.

Additional bridge interlocking signals are shared between the two modules, when a four quadrant system is required to ensure that the same bridge on both drives is firing and also that the current has reached zero on both drives before current reversal is attempted.

NOTE

Only terminals relevant to 12 pulse operation have been shown.

Setup Sequence

Table 5-3 Parallel 12 Pulse, 2Q Using I/O Connections

Master Setting	Description	Slave Setting	Description
Pr **7.19** = 4.04	Analog output 1 to output current demand	Pr **7.14** = 4.08	Analog input 2 to be torque input
Pr **5.43** = 1	Armature mode to parallel 12 pulse	Pr **4.11** = 1	Select torque mode
		Pr **5.43** = 1	Armature mode to parallel 12 pulse
		Pr **10.52** = 168	Mask field loss trip
		Pr **10.62** = Off	Mask field loss trip

Table 5-4 Parallel 12 Pulse, 4Q Using IO Connections

Master Setting	Description	Slave Setting	Description
Pr **7.19** = 4.04	Analog output 1 to output current demand	Pr **7.14** = 4.08	Analog input 2 to be torque input
Pr **8.21** = 5.44	Digital output to master bridge selected	Pr **8.21** = 5.44	Digital output to master bridge selected
Pr **8.22** = 5.45	Digital input 2 to slave bridge selected	Pr **8.22** = 5.45	Digital input 2 to slave bridge selected
Pr **5.43** = 2	Armature mode to parallel 12 pulse with bridge lockout	Pr **4.11** = 1	Select torque mode
		Pr **10.52** = 168	Mask field loss trip
		Pr **10.62** = Off	Mask field loss trip
		Pr **5.43** = 2	Armature mode to parallel 12 pulse with bridge lockout

Figure 5-8 Master Slave control connection detail for 12 pulse

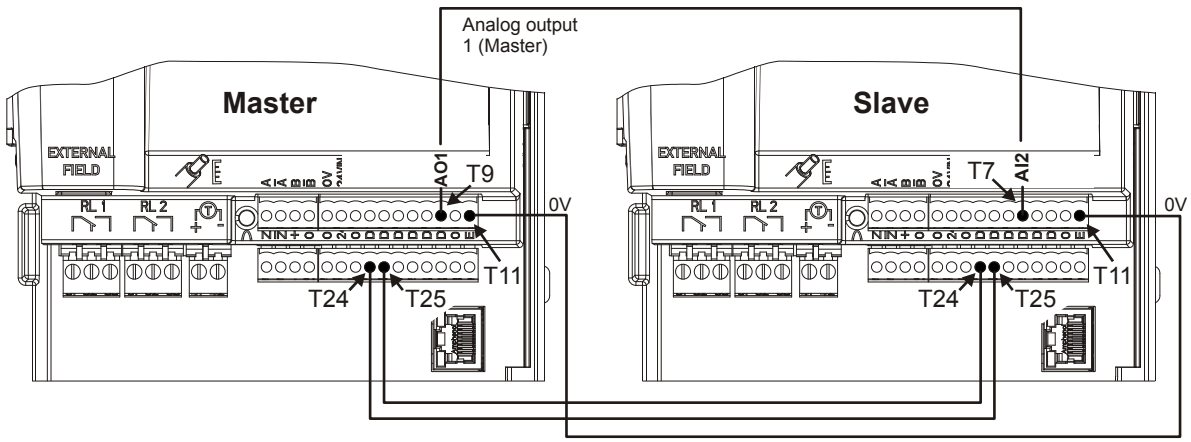

NOTE: Connection to T24 and T25 are only required for 4Q systems.

Table 5-5 Parallel 24 pulse 4Q Using I/O connections

Master Setting	Description	Slave Setting	Description
Pr **7.19** = 4.04	Analog output 1 to output current demand	Pr **7.14** = 4.08	Analog input 2 to be torque input
Pr **8.21** = 5.44	Digital output to master bridge selected	Pr **8.21** = 5.44	Digital output to master bridge selected
Pr **8.22** = 5.45	Digital input 2 to slave 1 bridge selected	Pr **8.22** = 5.45	Digital input 2 to slave 1 bridge selected
Pr **8.25** = 5.46	Digital input 5 to slave 2 bridge selected	Pr **8.25** = 5.46	Digital input 5 to slave 2 bridge selected
Pr **8.26** = 5.47	Digital input 6 to slave 3 bridge selected	Pr **8.26** = 5.47	Digital input 6 to slave 3 bridge selected
Pr **5.43** = 3	Armature mode to parallel 24 pulse with bridge lockout	Pr **4.11** = 1	Select torque mode
		Pr **10.52** = 168	Mask field loss trip
		Pr **10.62** = Off	Mask field loss trip
		Pr **5.43** = 3	Armature mode to parallel 24 pulse with bridge lockout

Figure 5-9 Master / Slave control connections for 24 pulse

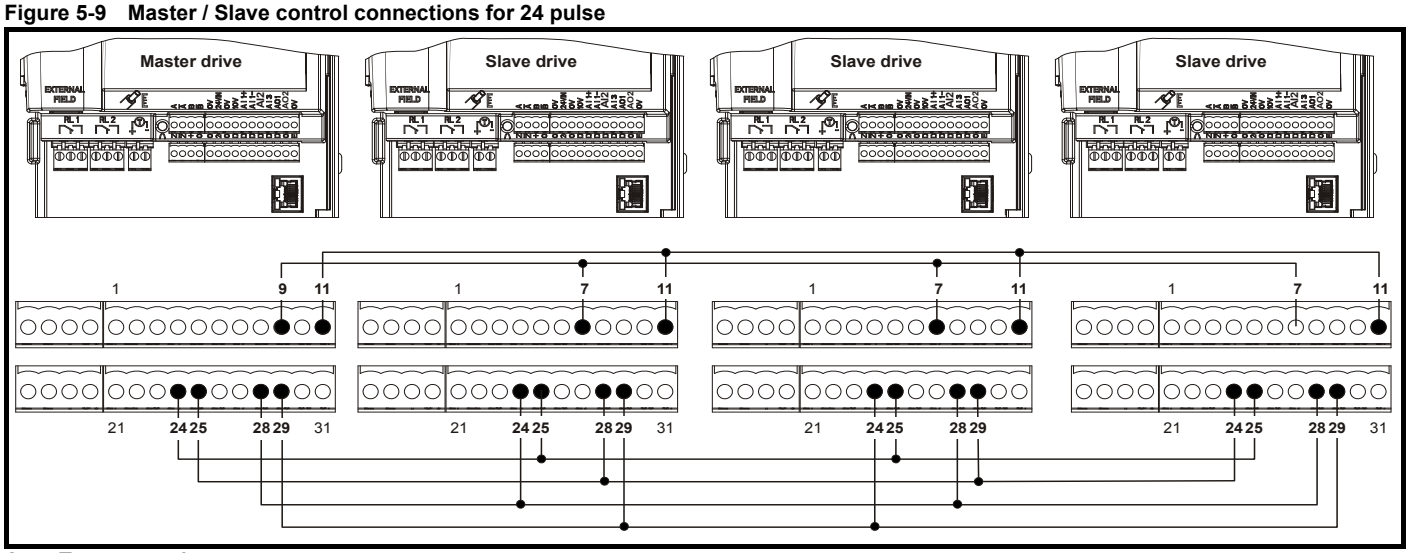

Auto Tune procedure

1. Set Pr **5.25** = 1 on Slave drives.
2. Set Pr **5.12** = 1 on Master drive.
3. Enable the system. When auto tune has finished, transfer the values of Pr **5.15**, Pr **4.13**, Pr **4.14** and Pr **4.34** from the master to each of the slave drives.
4. Re start auto tune by setting Pr **5.12** to 1 on the master drive only.
5. Enable the system.
6. When auto tune has finished, transfer the values of Pr **5.15**, Pr **4.13**, Pr **4.14** and Pr **4.34** from the master to the slave.
7. Set Pr **5.25** = 0 on Slave drives

Auto tune is now complete.

Figure 5-10 6 Pulse parallel operation 2 drives

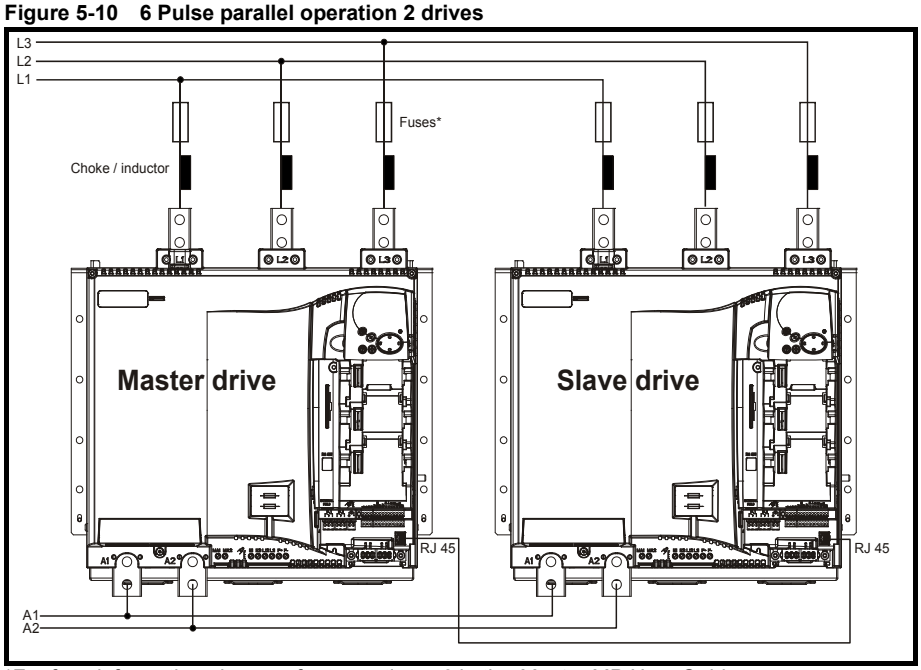

*For fuse information please refer to section 4.6 in the *Mentor MP User Guide*.

Figure 5-11 6 Pulse parallel operation 4 drives

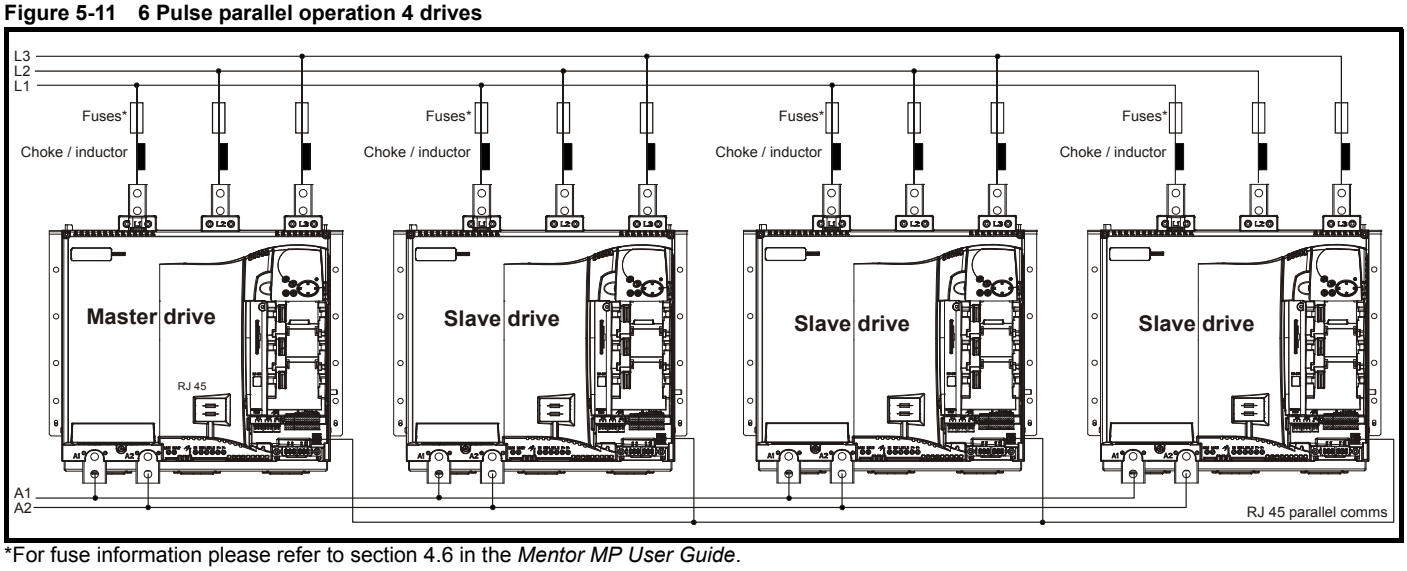

*For fuse information please refer to section 4.6 in the *Mentor MP User Guide*.

Master Drive in 6 pulse parallel system

Slave Healthy

The master drive must know the state of health of the slave (or slaves), in a 6 pulse parallel system. This can be achieved using digital IO or a communication module. Where there are multiple slave drives, the master can be setup to use 1 bit to check the health of the slave or multiple bits.

Figure 5-12 Single Slave

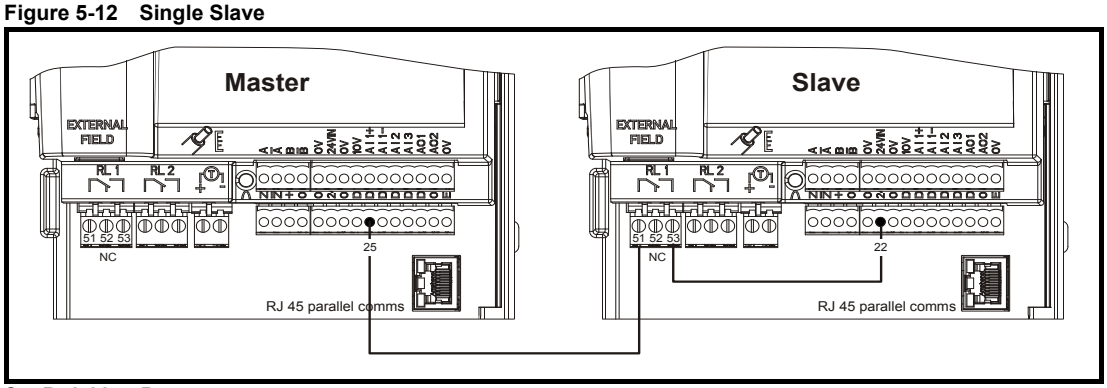

Set Pr **8.22** to Pr **5.45**.

Figure 5-13 Multiple slaves 1 monitor bit

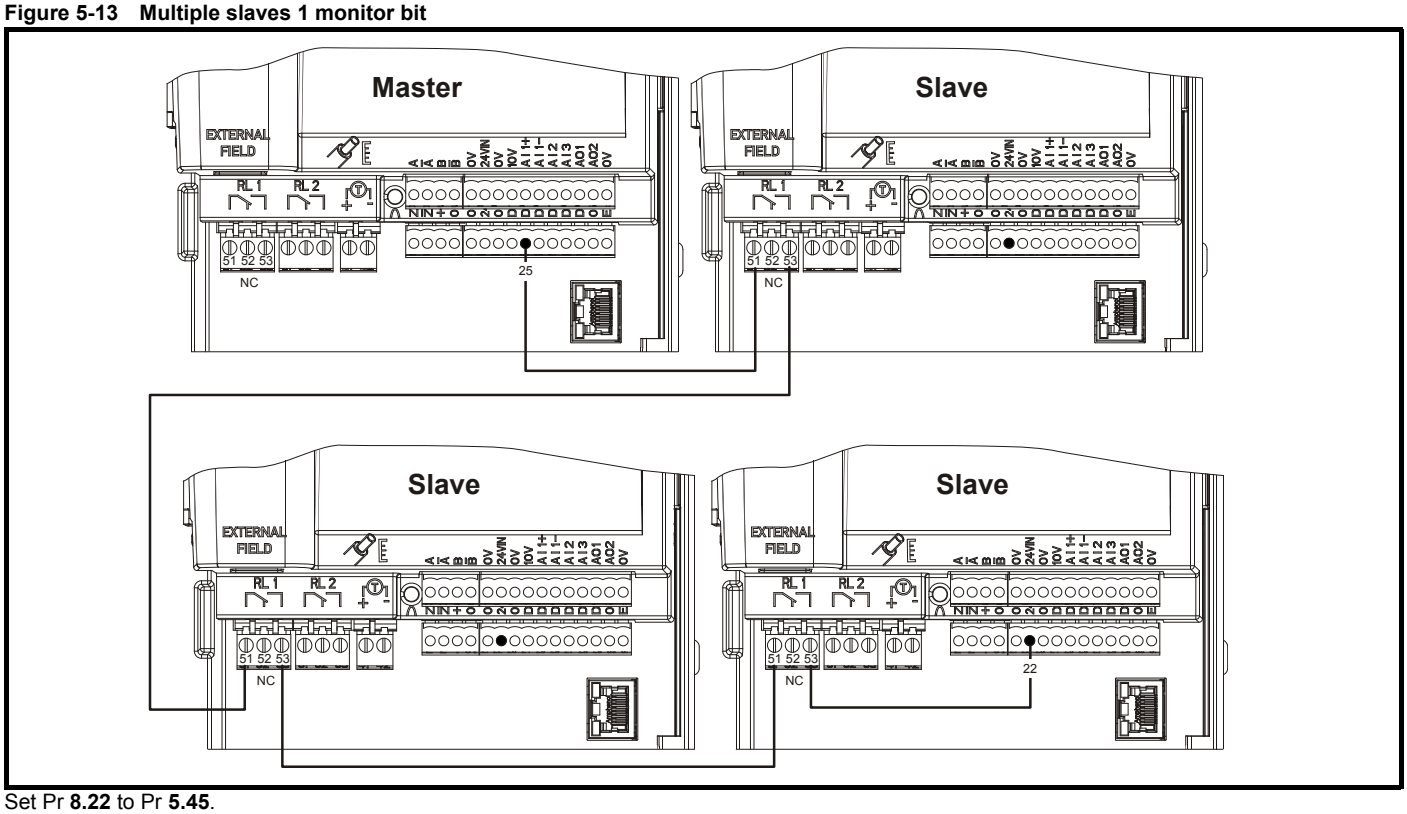

Set Pr **8.22** to Pr **5.45**.

Figure 5-14 Multiple Slaves signal multiple monitor Bits

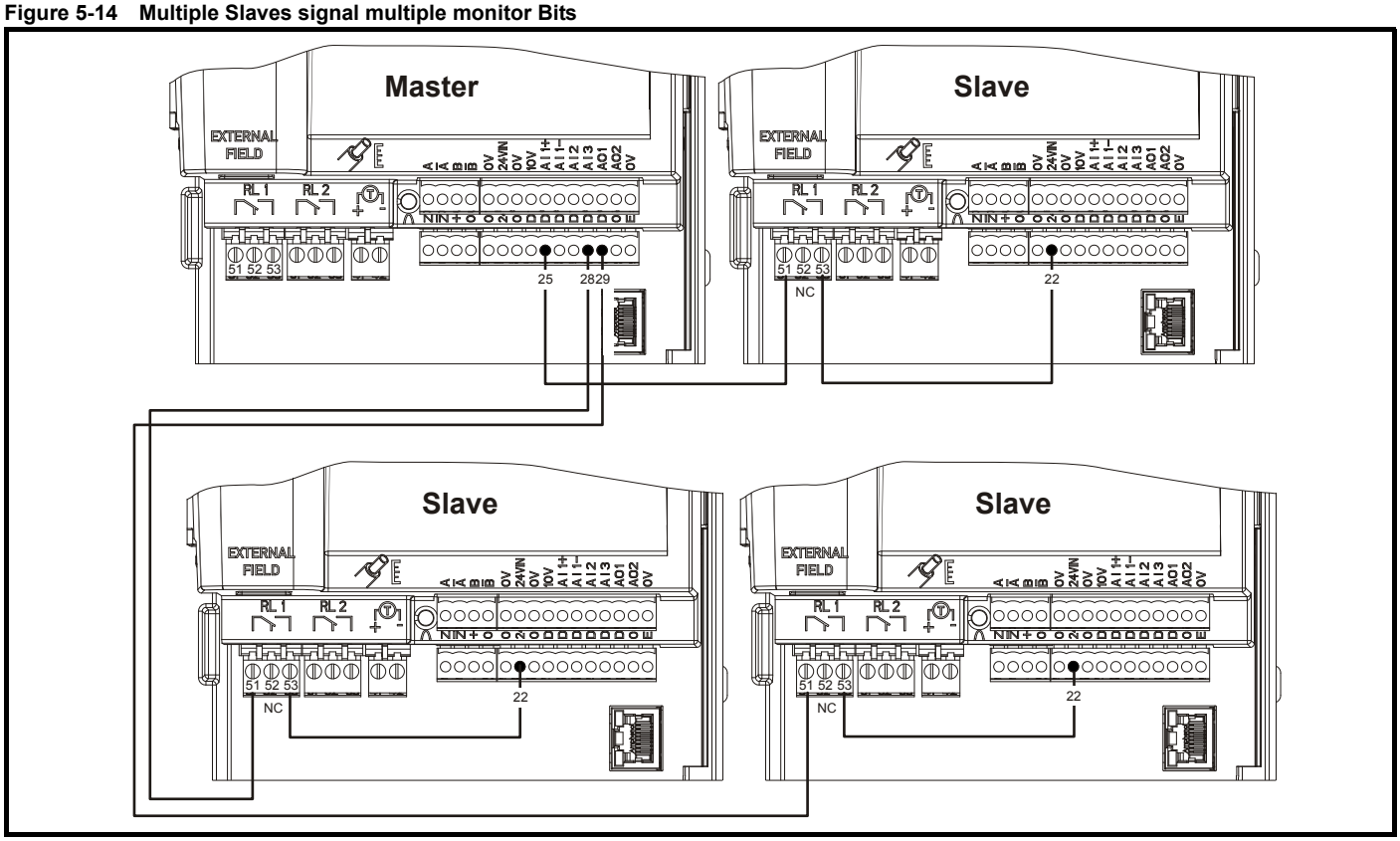

Set Pr **8.22** to Pr **5.45**, Pr **8.25** to Pr **5.46** and Pr **8.26** to Pr **5.47**.

Slave OK Bits

The loss of a slave OK input will trip the drive. This trip cannot be masked.

Figure 5-15 Slave OK bits

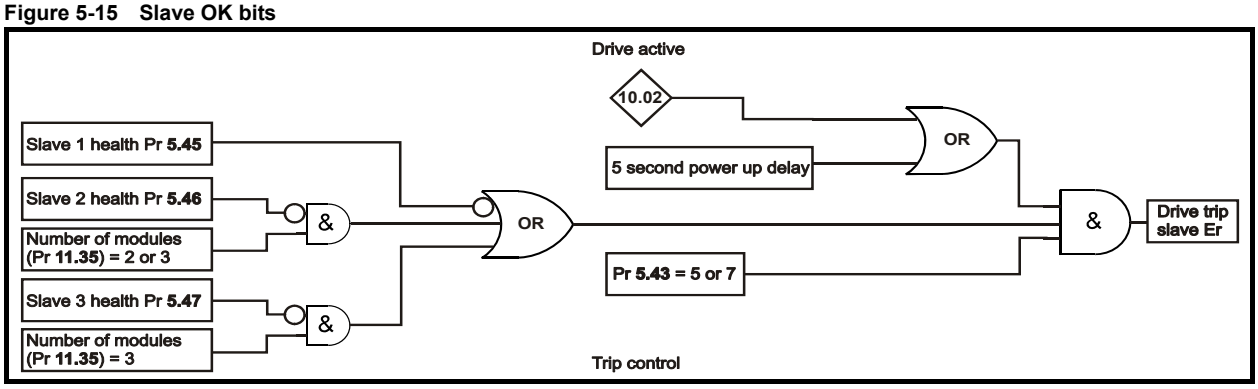

The 5 second power up delay is to allow the whole system to power up before checking that the slaves are healthy. Drive Active is used to ensure that the slave OK is checked when the master is given a run command within the 5 second timeout.

Setup Sequence

To configure a drive as the master drive in a 6 pulse parallel system proceed as follows:

- Configure I/O dependant on how the slave OK is to be received.
- Set Pr **5.43** to 7 (Parallel 6P master).
- Set Pr **11.35** equivalent to the number of slaves in the system.
- Save the current setup and reset the drive.
- Pr **11.32** will now equate to the number of slaves in the system plus 1 x the Drive rating.

Slave 6-pulse parallel

The slave does **not** control it's own thyristors so when a slave trips, the thyristors are still controlled from the master drive. The only exception is when the power software generates a hardware fault. Following this event, the slave power processor will stop firing its own thyristors.

Figure 5-16 Slave 6 pulse parallel

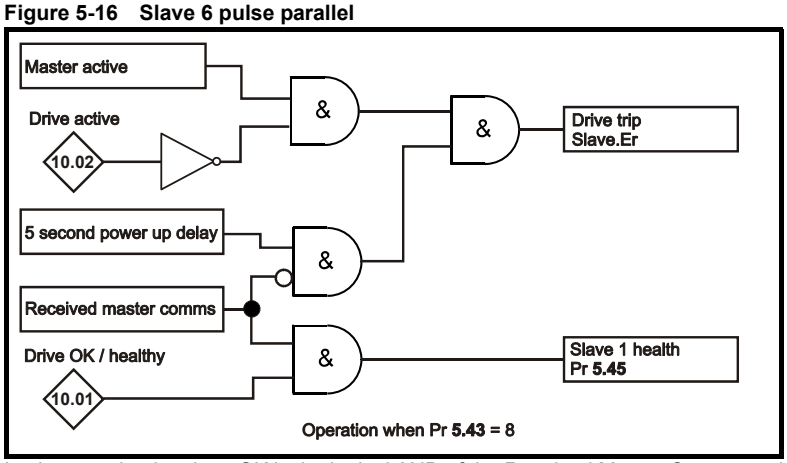

In slave mode, the slave OK is the logical AND of the Received Master Comms and Drive OK signal. Slave OK can be routed to a relay so the master has an indication of the status of the slave. The drive will trip if the master is active but the slave is not active. This ensures that the slave is enabled. The slave must be enabled so the drive will trip SL when the supply to the slave is removed.

Received Master Comms

This bit is set when the drive is in slave mode, and has received acceptable serial comms signals from the master drive. When set, this bit is used to hold the Slave OK flag low at power up or mode change. This bit will also revert to the false state if the comms lead between the master and slave is removed.

Setup Sequence

- If using relay 1 as slave healthy, set Pr **8.27** to Pr **5.45**.
- Set Pr **5.43** to 8 (Parallel 6P master).
- Save the current setup and reset the drive.
- The Line contactor control must be controlled from the master.
- Enable the drive.
- If the drive is not enabled the drive will trip Slave.Er.

05.44	Bridge request output															
Coding	Bit	SP	FI	DE	TE	VM	DP	ND	RA	NC	NV	PT	US	RW	BU	PS
	1													1		
Range	0 to 1															
Update rate	1 ms write															

Indicates which bridge in a 12 or 24 parallel system has been requested. This has to be sent via digital I/O or field bus.

05.45 05.46 05.47	Slave bridge request status															
Coding	Bit	SP	FI	DE	TE	VM	DP	ND	RA	NC	NV	PT	US	RW	BU	PS
	1															
Range	0 to 1															
Update rate	1 ms read															

The bridge status of the other drives in a 12 or 24 parallel system have to be sent, via digital I/O or field bus, to these parameters. When digital I/O is setup to use Pr **5.45** to Pr **5.47** the software reads and writes to the I/O at 1 ms.

5.48	External flux feedback select															
Coding	Bit	SP	FI	DE	TE	VM	DP	ND	RA	NC	NV	PT	US	RW	BU	PS
	1												1	1		
Default	0															
Second motor parameter	Pr **21.38**															
Update rate	1 ms read															

When this parameter is set, the flux feedback is taken from Pr **5.89**. This has been made available where the field flux is provided by an independent external controller (not FXMP25).

5.52	IR drop															
Coding	Bit	SP	FI	DE	TE	VM	DP	ND	RA	NC	NV	PT	US	RW	BU	PS
			1			1		1		1		1				
Range	+/- ARMATURE_VOLTAGE_MAX Vdc															
Update rate	Background write															

The value resulting from the application of Pr **5.61** to the filtered current.

5.53	Back emf															
Coding	Bit	SP	FI	DE	TE	VM	DP	ND	RA	NC	NV	PT	US	RW	BU	PS
			1			1		1		1		1				
Range	+/- ARMATURE_VOLTAGE_MAX Vdc															
Update rate	Background write															

The calculated motor back emf based on armature voltage minus the IR drop (Pr **5.52**).

5.54	Flux feedback															
Coding	Bit	SP	FI	DE	TE	VM	DP	ND	RA	NC	NV	PT	US	RW	BU	PS
			1				1	1		1		1				
Range	±150.0 %															
Update rate	Background write															

Flux feedback after the current to flux converter, see motor saturation breakpoints (Pr **5.29** and Pr **5.30**).

5.55	**Flux / Voltage demand**															
Coding	Bit	SP	FI	DE	TE	VM	DP	ND	RA	NC	NV	PT	US	RW	BU	PS
			1				1	1		1		1				
Range	±120.0 %															
Update rate	Mains period / 6 ms															

When in current mode the flux demand from the field weakening voltage loop, subject to the limits of Pr **5.68** and Pr **5.69**.
When in voltage mode [Pr **5.75**=On (1)] the voltage demand is subject to the limits of Pr **5.68** and Pr **5.69**.

5.56 {di09, 0.44}	**Field current feedback**															
Coding	Bit	SP	FI	DE	TE	VM	DP	ND	RA	NC	NV	PT	US	RW	BU	PS
			1				2	1		1		1				
Range	±50.00A															
Update rate	Background write															

Indicates the field current feedback in 0.01 amps.

5.57	**Percentage voltage demand**															
Coding	Bit	SP	FI	DE	TE	VM	DP	ND	RA	NC	NV	PT	US	RW	BU	PS
			1				1	1		1		1				
Range	±150.0 %															
Update rate	Background write															

The range is 0 to 150 % in half control mode for the internal field controller.

5.58	**Field Firing angle**															
Coding	Bit	SP	FI	DE	TE	VM	DP	ND	RA	NC	NV	PT	US	RW	BU	PS
			1				1	1		1		1			1	
Range	0 to 180 ^{o}															
Update rate	Background write															

0° equals fully phased forward.

5.59	**Back emf set point**															
Coding	Bit	SP	FI	DE	TE	VM	DP	ND	RA	NC	NV	PT	US	RW	BU	PS
						1							1	1	1	
Range	0 to ARMATURE_VOLTAGE_MAX Vdc															
Default	For 480V Drive: Eur: 440, USA 500 For 575V Drive: Eur: 630, USA 630 For 690V Drive: Eur: 760, USA 760															
Second motor parameter	Pr **21.08**															
Update rate	Background read															

The programmable value of the armature back emf, in volts, at which the field begins to weaken.
Defined as the voltage at which base speed is reached.

5.60	**Field output voltage**															
Coding	Bit	SP	FI	DE	TE	VM	DP	ND	RA	NC	NV	PT	US	RW	BU	PS
			1					1		1		1				
Range	0 to 500 Vdc															
Update rate	Background write															

The calculated voltage being generated on the field output terminals.

5.61	Armature Resistance															
Coding	Bit	SP	FI	DE	TE	VM	DP	ND	RA	NC	NV	PT	US	RW	BU	PS
							4						1	1	1	
Range	0 to 6.0000 Ω															
Default	0															
Second motor parameter	Pr **21.10**															
Update rate	Background read															

This is used to calculate the armature IR voltage drop that is used as a correction to the measured armature voltage, to allow the back emf to be computed.

5.62	Field weakening voltage loop P gain															
Coding	Bit	SP	FI	DE	TE	VM	DP	ND	RA	NC	NV	PT	US	RW	BU	PS
							2						1	1	1	
Range	0 to 300.00															
Default	0.40															
Second motor parameter	Pr **21.33**															
Update rate	Background read															

This is the proportional voltage loop gain used during field weakening. If this parameter is set too high then instability during field weakening can occur. When this is set too low the armature voltage may overshoot when base speed is reached. An increase in this gain increases the rate at which the field weakens.

5.63	Field weakening voltage loop I gain															
Coding	Bit	SP	FI	DE	TE	VM	DP	ND	RA	NC	NV	PT	US	RW	BU	PS
							2						1	1	1	
Range	0 to 300.00															
Default	5.00															
Second motor parameter	Pr **21.34**															
Update rate	Background read															

This is the integral voltage loop gain used during field weakening. If this parameter is set too high then instability during field weakening can occur. When this is set too low the armature voltage may overshoot when base speed is reached. An increase in this gain increases the rate at which the field weakens.

5.64	Field weakening enable															
Coding	Bit	SP	FI	DE	TE	VM	DP	ND	RA	NC	NV	PT	US	RW	BU	PS
	1												1	1		
Range	0 to 1															
Default	0															
Update rate	Background read															

When this parameter is 0 the field weakening voltage loop does not run and the estimated speed is based on the field flux being 100 %. When this parameter is 1 the field weakening voltage is enabled which allows the field to be weakened.

5.65	Enable field economy timeout															
Coding	Bit	SP	FI	DE	TE	VM	DP	ND	RA	NC	NV	PT	US	RW	BU	PS
	1												1	1		
Range	0 to 1															
Update rate	Eur 0, USA 1															

Permits the field current to be configured to the field economy level (Pr **5.67**) automatically after the drive has been disabled for a period of time (Pr **5.66**). This is used to prevent the motor windings from overheating if the drive is stopped and the motor ventilation is switched off. This can also be used to prevent condensation in the motor when it is not in use.

5.66	**Field economy timeout time**															
Coding	Bit	SP	FI	DE	TE	VM	DP	ND	RA	NC	NV	PT	US	RW	BU	PS
													1	1	1	
Range	0 to 255s															
Default	30 s															
Update rate	Background read															

Define the time in seconds, after the field goes into economy mode after

1. The drive becomes inactive
   or
2. At power up
   or
3. After the drive has been reset.

The time out is selected by Pr **5.65**.

5.67	**Field economy level**															
Coding	Bit	SP	FI	DE	TE	VM	DP	ND	RA	NC	NV	PT	US	RW	BU	PS
							1						1	1	1	
Range	0 to 120.0 %															
Default	25 %															
Update rate	Background read															

Sets the reduced field current level used when the field economy function is used.

Figure 5-17 Time diagram when economy timeout selected (Pr 5.65 = 1)

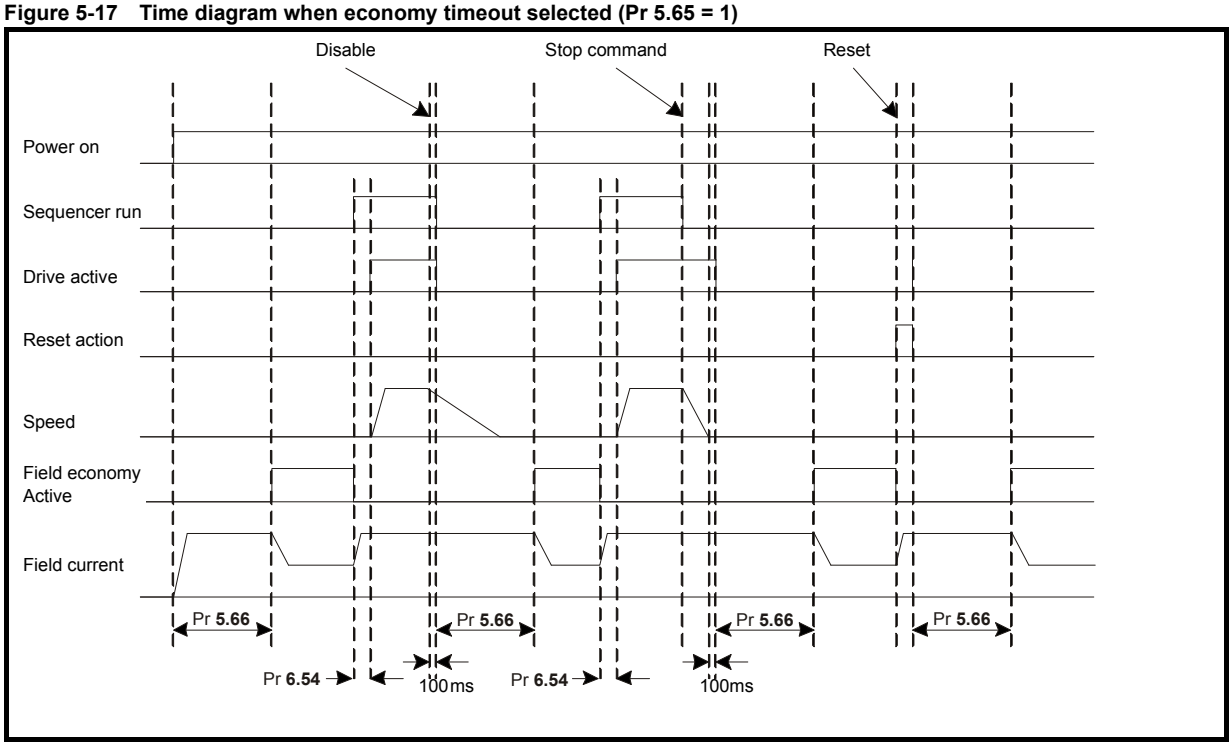

5.68	Maximum flux / Voltage limit															
Coding	Bit	SP	FI	DE	TE	VM	DP	ND	RA	NC	NV	PT	US	RW	BU	PS
						1	1						1	1	1	
Range	0 to MAX_FIELD_FLUX %															
Default	100 %															
Update rate	Background read															

When in current mode [Pr **5.75** = OFF (0)] this is the maximum flux limit of the field weakening voltage loop. The maximum value of this parameter depends upon the setting of the rated current Pr **5.70** {**SE10, 0.31**}.

MAX_FIELD_FLUX = 100 x 25 / **Pr 5.70** {**SE10, 0.31**}.

For values of Pr **5.70** {**SE10, 0.31**} less than 20.8A the MAX_FIELD_FLUX will be limited to 120 %.

This parameter becomes the maximum voltage demand when field voltage mode is selected Pr **5.75** = On (1).

5.69	Minimum flux / Voltage limit															
Coding	Bit	SP	FI	DE	TE	VM	DP	ND	RA	NC	NV	PT	US	RW	BU	PS
							1						1	1	1	
Range	0 to 120.0 %															
Default	50 %															
Update rate	Background read															

When in current mode [Pr **5.75** = OFF (0)] this is the minimum value of flux demand to prevent excessive field weakening and hence over speeding. This parameter becomes the minimum voltage demand when field voltage mode is selected Pr **5.75** = On (1).

NOTE

If Flux feedback is selected from Pr **5.89** and the value falls below that of the value set in Pr **5.69**, then no action can be taken by the drive as it does not control the Flux demand.

5.70 {SE10, 0.31}	Rated field current															
Coding	Bit	SP	FI	DE	TE	VM	DP	ND	RA	NC	NV	PT	US	RW	BU	PS
						1	2		1			1	1	1	1	
Range	0 to FIELD_CURRENT_SET_MAX															
Default	Size 1 - Eur: 2A, USA: 8A Size 2A&B - Eur: 3A, USA: 20A Size 2C&D - Eur: 5A, USA: 20A															
Second motor parameter	Pr **21.24**															
Update rate	Background read															

This parameter will be set to the field current of the motor and will define the 100 % point for the field controller.

5.71	Flux loop P gain															
Coding	Bit	SP	FI	DE	TE	VM	DP	ND	RA	NC	NV	PT	US	RW	BU	PS
							2						1	1	1	
Range	0 to 30.00															
Default	3															
Second motor parameter	Pr **21.31**															
Update rate	Background read															

Increasing this parameter will allow the loop to track the current demand more closely. Setting the value too high will result in instability.

5.72	Flux loop I gain															
Coding	Bit	SP	FI	DE	TE	VM	DP	ND	RA	NC	NV	PT	US	RW	BU	PS
							2						1	1	1	
Range	0 to 300.00															
Default	60															
Second motor parameter	Pr **21.32**															
Update rate	Background read															

Increasing this parameter will allow the loop to track the current demand more closely. Setting the value too high will result in instability.

Table 5-6 Converting from Mentor II gains to Mentor MP gains

Mentor II			Mentor MP	
Pr **6.16**	Pr **6.23**	Pr **6.24**	Pr **5.71**	Pr **5.72**
0	0	0	1.5	60
1	0		3	
0	1		0.75	30
1	1		1.5	
0	0	1	0.37	15
1	0		0.75	
0	1		0.19	7.5
1	1		0.37	

5.73 {SE11, 0.32}	Rated field voltage															
Coding	Bit	SP	FI	DE	TE	VM	DP	ND	RA	NC	NV	PT	US	RW	BU	PS
													1	1	1	
Range	0 to 500 Vdc															
Default	Eur 360, USA 300															
Second motor parameter	Pr **21.23**															
Update rate	Background read															

The maximum voltage the field controller is allowed to generate.

5.74	Rated field compensation factor															
Coding	Bit	SP	FI	DE	TE	VM	DP	ND	RA	NC	NV	PT	US	RW	BU	PS
													1	1	1	
Range	0 to 100 %															
Default	100 %															
Second motor parameter	Pr **21.35**															
Update rate	Background read															

The nameplate rated field current is normally quoted for a cold field. At this level of current the machine is over fluxed which causes the back EMF of the machine to be higher than expected, which in turn causes the estimated speed to be inaccurate.
The rotating autotune calculates the actual field current required to produce a 100 % field flux at ¼ rated speed with no load. This compensation makes the estimated speed calculation more accurate. The rotating autotune sets this value in the range of 80 % to 100 %.
On motors with a high level of armature reactance the autotune level may need to be increased so the field is always fully fluxed.

5.75	Field voltage mode select															
Coding	Bit	SP	FI	DE	TE	VM	DP	ND	RA	NC	NV	PT	US	RW	BU	PS
	1												1	1		
Range	0 to 1															
Default	Eur 0, USA 1															
Update rate	Background read															

When set to 1 the field controller becomes a voltage controller which controls the voltage applied to the field winding.
When set to 0 field controller operates as a current controller.

5.76	Field controller supply															
Coding	Bit	SP	FI	DE	TE	VM	DP	ND	RA	NC	NV	PT	US	RW	BU	PS
			1					1		1		1			1	
Range	0 to 550 rms Vac															
Update rate	Background write															

This parameter indicates the average rms voltage across the E1 E3 input terminals. Filtered by a 100 ms first order filter.

5.77 {SE12, 0.33}	Enable field control															
Coding	Bit	SP	FI	DE	TE	VM	DP	ND	RA	NC	NV	PT	US	RW	BU	PS
	1												1	1		
Range	0 to 1															
Default	0															
Update rate	Mains period / 6 ms															

When this parameter is set to 0 the internal and external field controllers are disabled. Setting the parameter to 1 enables the internal or external field controller. If using a Permanent Magnet motor or external field regulators, it is necessary to mask the FdL trip. Refer to Pr **10.52** to Pr **10.61** (Trip masks).

5.78	Field mode															
Coding	Bit	SP	FI	DE	TE	VM	DP	ND	RA	NC	NV	PT	US	RW	BU	PS
					1								1	1	1	
Range	0 to 2 (IntrnL (0), EtrnL (1) and E FULL (2))															
Default	0															
Update rate	Background read															

When the parameter is set to internal (IntrnL) the internal field controller is used. Pr **5.54**, Pr **5.56** {**di09, 0.44**}, Pr **5.57**, Pr **5.58** and Pr **5.60** are controlled by the internal field controller.
When the parameter is set to external half control (EtrnL) or external in full control (E FULL) the drive will use the external field controller. Pr **5.54**, Pr **5.56** {**di09, 0.44**}, Pr **5.57**, Pr **5.58** and Pr **5.60** will now be controlled by the external field controller. If no signal is received from the external field controller the drive will trip field loss.

5.79	Field economy active															
Coding	Bit	SP	FI	DE	TE	VM	DP	ND	RA	NC	NV	PT	US	RW	BU	PS
	1														1	
Range	0 to 1															
Default	0															
Update rate	Background read															

When this bit is set the economy timeout feature is selected.

5.80	Field economy level select															
Coding	Bit	SP	FI	DE	TE	VM	DP	ND	RA	NC	NV	PT	US	RW	BU	PS
	1												1	1		
Range	0 to 1															
Default	0															
Update rate	Background read															

When set to 1 the field economy level is selected. When set to 0 field economy is controlled by the field economy timeout function.

5.81	**Field thermal filter**															
Coding	Bit	SP	FI	DE	TE	VM	DP	ND	RA	NC	NV	PT	US	RW	BU	PS
								1					1	1	1	
Range	0.0 to 3000.0															
Default	24.0															
Second motor parameter	Pr **21.30**															
Update rate	Background read															

The motor is modelled thermally in a way that is equivalent to the electrical circuit shown below.

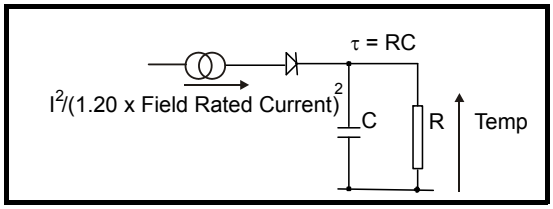

The temperature of the field as a percentage of maximum temperature, with a constant current magnitude of I and constant value of field rated current (set by Pr **5.70** {**SE10, 0.31**} or Pr **21.24**) after time t is given by

$$\text{Temp} = [I^2 / (1.20*\text{Field rated current})^2]\ (1 - e^{-t/\tau}) \times 100\ \%$$

This assumes that the maximum allowed field temperature is produced by 1.20 x field rated current and that τ is the thermal filter of the point in the motor that reaches it maximum allowed temperature first. τ is defined by Pr **5.81**. The estimated motor temperature is given by Pr **5.82** as a percentage of maximum temperature. If the Pr **5.81** has a value between 0.0 and 1.0 the thermal filter is taken as 1.0.
When the estimated temperature reaches 100 % the drive stops the motor and then trips on F.OVL.

The time for some action to be taken by the drive from cold with constant field current is given by:

$$T_{trip} = -(\text{Pr } \mathbf{5.81}) \times \ln(1 - (1.20 \times \text{Pr } \mathbf{5.70}\ \{\mathbf{SE10, 0.31}\} / \text{Pr } \mathbf{5.56}\ \{\mathbf{di09, 0.44}\})^2)$$

Alternatively the thermal filter can be calculated from the trip time with a given current from

$$\text{Pr } \mathbf{5.81} = -T_{trip} / \ln(1 - (1.20 / \text{Overload})^2)$$

For example, if the drive should trip after supplying 125 % overload for 60 seconds then

$$\text{Pr } \mathbf{5.81} = -60 / \ln(1 - (1.20 / 1.25)^2) = 24$$

The thermal model temperature accumulator is reset to zero at power-up and accumulates the temperature of the field while the drive remains powered-up. Each time Pr **11.45** is changed to select a new motor, or the rated current defined by Pr **5.70** {**SE10, 0.31**} or Pr **21.24** (depending on the motor selected) is altered, the accumulator is reset to zero.

5.82	**Field overload accumulator**															
Coding	Bit	SP	FI	DE	TE	VM	DP	ND	RA	NC	NV	PT	US	RW	BU	PS
							1	1		1		1			1	
Range	0 to 100.0 %															
Update rate	Background write															

See Pr **5.81**.

5.83	**Field reversal enable**															
Coding	Bit	SP	FI	DE	TE	VM	DP	ND	RA	NC	NV	PT	US	RW	BU	PS
						1			1				1	1	1	
Range	0 to ONLY_2_QUADRANT															
Default	0															
Update rate	Background read															

With a 2Q drive, the motor can be driven in both the forward and reverse directions by changing the polarity of voltage applied to the field. This mode of operation can be achieved using a 2Q drive and an external field controller. The flux in the field cannot be reduced until the motor has stopped. The time taken for the motor direction to change, will depend on how quickly the field flux can be reversed. Figure 5-18 and Figure illustrate the sequence of events during a forward to reverse and reverse to forward change of direction.

Figure 5-18 Field reversal

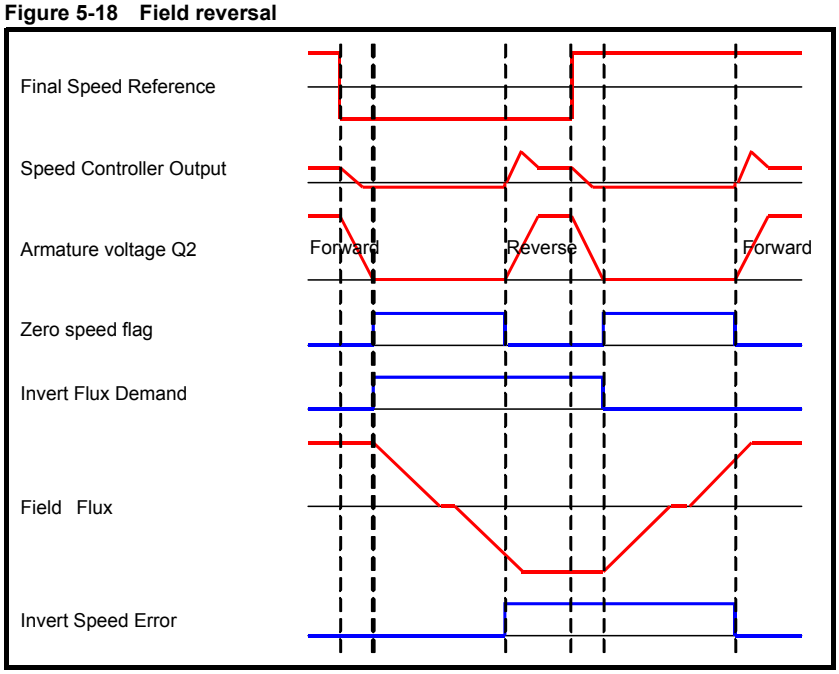

Figure 5-19 Field reversal state machine

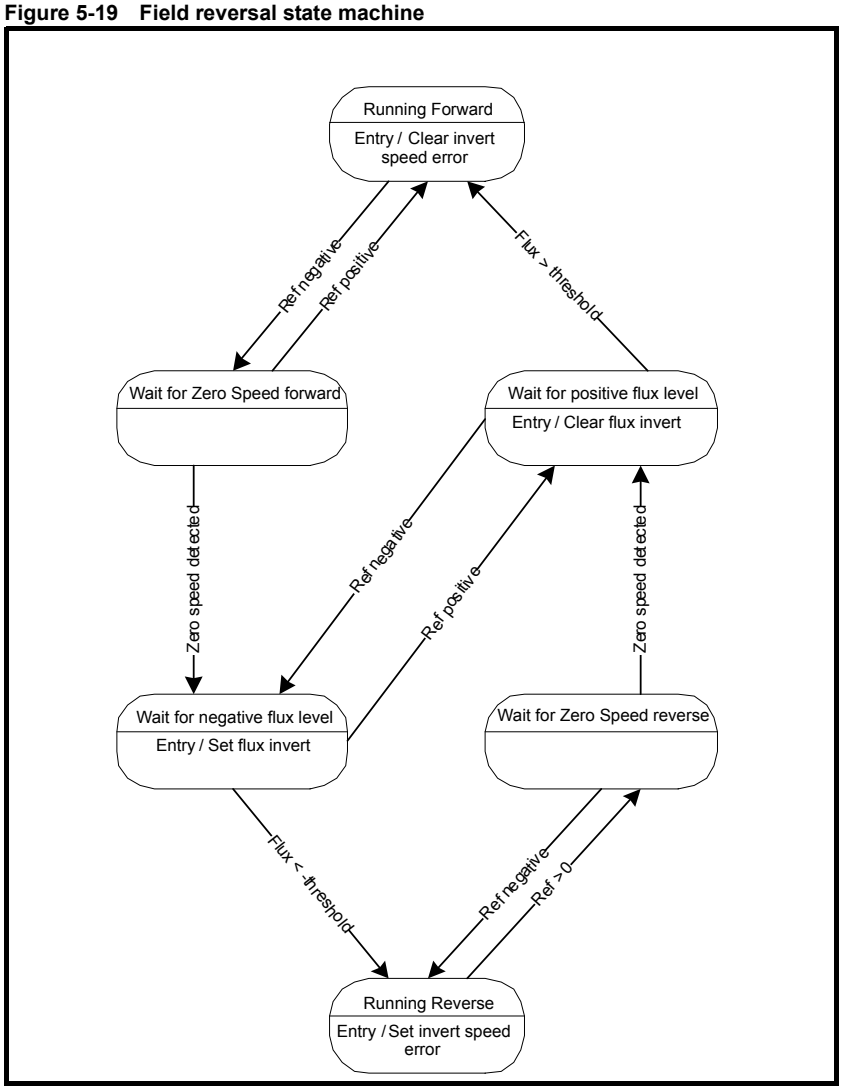

5.84	Field Flux threshold															
Coding	Bit	SP	FI	DE	TE	VM	DP	ND	RA	NC	NV	PT	US	RW	BU	PS
							1						1	1	1	
Range	0 to 100 %															
Default	75 %															
Update rate	Background read															

Pr **5.84** sets the threshold at which the invert speed error flag is set. An internal lower limit of 50 % is applied.

5.85	Flux demand invert															
Coding	Bit	SP	FI	DE	TE	VM	DP	ND	RA	NC	NV	PT	US	RW	BU	PS
	1							1		1						
Range	0 to 1															
Update rate	Background read															

When this parameter is set the flux demand is inverted.

5.86	Speed error invert															
Coding	Bit	SP	FI	DE	TE	VM	DP	ND	RA	NC	NV	PT	US	RW	BU	PS
	1							1		1		1				
Range	0 to 1															
Update rate	Background read															

When this parameter is set the speed error is inverted.

5.87	Field IR compensation															
Coding	Bit	SP	FI	DE	TE	VM	DP	ND	RA	NC	NV	PT	US	RW	BU	PS
							1						1	1	1	
Range	0 to 100.0 %															
Default	100.0 %															
Second motor parameter	Pr **21.36**															
Update rate	1 ms read															

This parameter is used to apply compensation for IR voltage drop in the field weakening voltage loop such that the EMF within the machine is regulated rather than terminal voltage. The default value of 100.0 % provides full compensation. This parameter can be adjusted to apply less compensation if required or not. If this parameter is adjusted then the set point for the field weakening voltage loop (Pr **5.59**) may need adjusting also to get the required armature voltage on the motor.

5.88	Armature IR compensation															
Coding	Bit	SP	FI	DE	TE	VM	DP	ND	RA	NC	NV	PT	US	RW	BU	PS
							1						1	1		
Range	±100.0 %															
Default	100.0 %															
Second motor parameter	Pr **21.37**															
Update rate	1 ms read															

This parameter is used to apply compensation for IR voltage drop in the machine when the drive is being operated in estimated speed feedback. The default value of 100 % provides full compensation. In some motors compensation windings are employed to correct for speed droop under load and so 100 % compensation is not required. In these cases this parameter must be adjusted to apply the correct amount of compensation. Setting a negative value will cause the speed to fall as load increases.

5.89	External flux feedback															
Coding	Bit	SP	FI	DE	TE	VM	DP	ND	RA	NC	NV	PT	US	RW	BU	PS
							1	1		1				1	1	
Range	0 to 100.0 %															
Update rate	1 ms read															

This parameter allows the flux feedback to come from an external field current controller (not FXMP25). This can be done via either an analog input or by a high speed fieldbus. When Pr **5.48** is set to 1 this parameter is used as the flux feedback.

5.7 Menu 6: Sequencer and clock

Figure 5-20 Menu 6 logic diagram

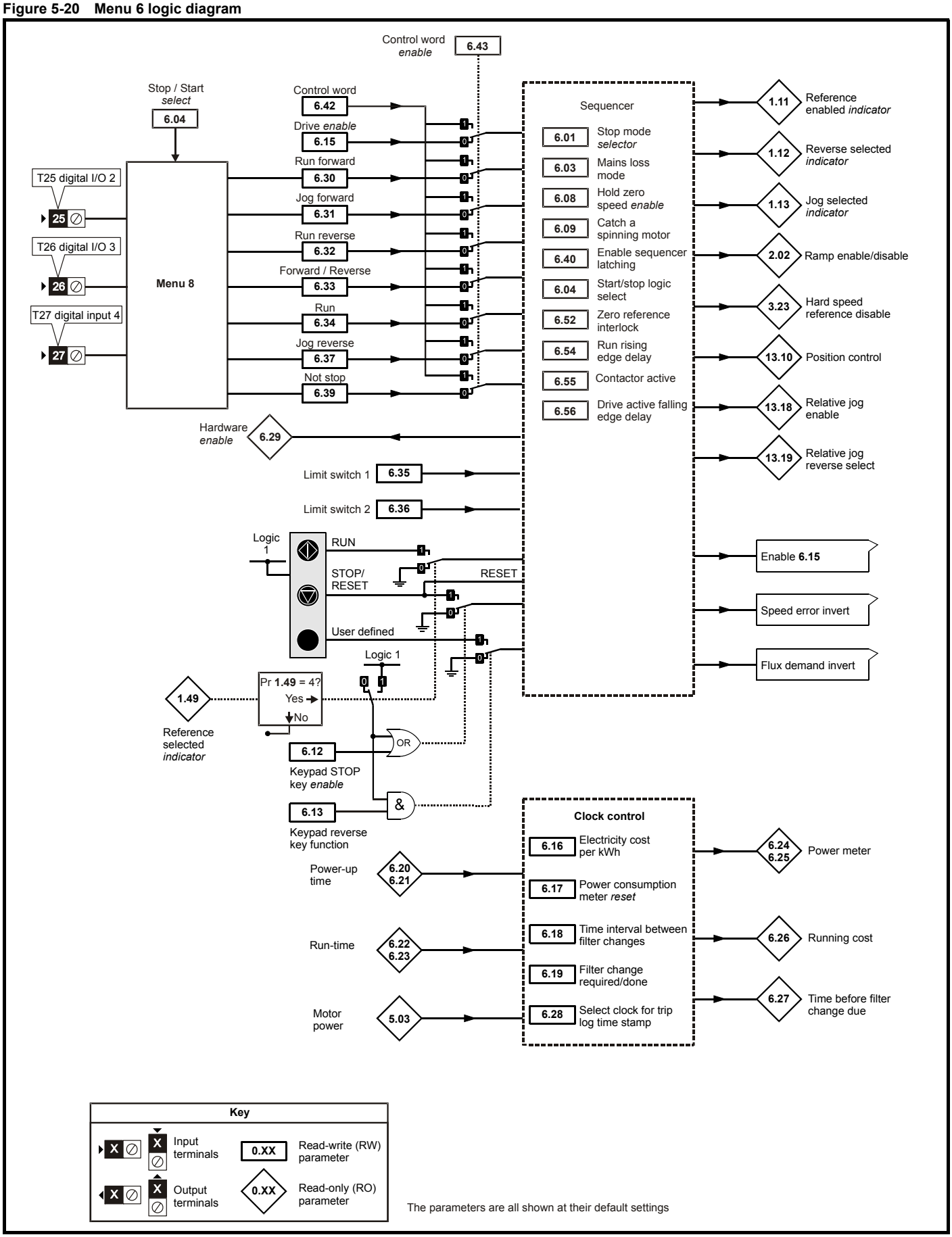

6.01	Stop mode															
Coding	Bit	SP	FI	DE	Txt	VM	DP	ND	RA	NC	NV	PT	US	RW	BU	PS
					1								1	1	1	
Range	0 to 2															
Default	1															
Update rate	Background read															

Only one stopping phase exists and the ready state is entered as soon as the single stopping action is complete.It should be noted that the stop condition is detected when the speed feedback is below the zero speed threshold (Pr **3.05**) for at least 16 ms. If the speed is not stable it is possible that the stop condition is not detected. In this case the system should be made more stable or the zero speed threshold should be raised.

Stopping Mode	Action
0: Coast	Inhibits the drive
1: Ramp	Stop with ramp
2: No ramp	Stop with no ramp

If coast stop is selected the inverter is inhibited immediately when the run command is removed. If however, hold zero speed is also selected (Pr **6.08** = 1), then the drive will be re-enabled to hold zero speed. The result is that the drive is disabled for one sample and then enabled to ramp the motor to a stop. Therefore if coast stop is required Pr **6.08** should be set to zero to disable hold zero speed.

If stop with ramp is selected the relevant ramp rate is used to stop the motor even if Pr **2.02** is set to zero to disable ramps.

The motor can be stopped with position orientation after stopping. This mode is selected with the position controller mode (Pr **13.10**). When this mode is selected Pr **6.01** has no effect.

6.03	Mains loss ride through															
Coding	Bit	SP	FI	DE	Txt	VM	DP	ND	RA	NC	NV	PT	US	RW	BU	PS
													1	1		
Range	0 to 2 (diS, StoP, ridEth)															
Default	0															
Update rate	Background read															

The length of time that the software can keep running after power loss will depend on the AC level before the power was lost. On a 220 V supply, the ride through ability will be very short.

In mode 0 (dis)

- An auxiliary supply failure takes priority over an SL trip.
- Following an auxiliary supply failure:

  The drive trips UU and Solutions Modules are informed. The drive will use the external 24 V supply if connected, the fan/s are stopped, and a power down save is performed.
- If the line supply is lost and the auxiliary supply is good, the drive will trip supply loss SL and firing of the thyristors will suspend approximately 50 ms later.

In mode 1 (StoP):

- The auxiliary supply failure and SL trip are independent.
- Following an auxiliary supply failure:

  The drive trips UU and Solutions Modules are informed. The drive will use the external 24 V supply if connected, the fan/s are stopped, and a power down save is performed.
- If the line supply is lost and the auxiliary supply is good the drive will trip supply loss SL and firing of the thyristors will suspend within 10 ms of the line supply being lost.

In mode 1 (ridEth):

- The auxiliary supply failure and SL trip are independent.
- Following an auxiliary supply failure:

  The drive does not trip and show ‘rdy’. Solutions Modules are informed. The drive will use the external 24 V supply if connected, the fan/s are stopped, and a power down save is performed.

  When the auxiliary supply is re-applied, the drive is preloaded with ‘catch a spinning motor’ mode.
- If the line supply is lost and the auxiliary supply is good, the drive goes into ‘rdy’ state. Firing of the thyristors will suspend within 10 ms of the line supply being lost. When the supply is re-applied the drive is preloaded with ‘catch a spinning motor’ mode.

6.04	**Start/stop logic select**															
Coding	Bit	SP	FI	DE	Txt	VM	DP	ND	RA	NC	NV	PT	US	RW	BU	PS
													1	1	1	
Range	0 to 4															
Default	4															
Update rate	Background read															

This parameter is provided to allow the user to select several predefined digital input routing macros to control the sequencer. When a value between 0 and 3 is selected the drive processor continuously updates the destination parameters for T25 digital I/O 2, T26 digital I/O 3 and T27 digital input 4 and the “enable sequencer latching bit” (Pr **6.40**). When a value of 4 is selected the destination parameters for these digital I/O and Pr **6.40** can be modified by the user. (Note any changes made to the destination parameters only become active after a drive reset.)

Pr 6.04	T25 digital I/O 2	T26 digital I/O 3	T27 digital input 4	Pr 6.40
0	Pr **6.29** Hardware Enable	Pr **6.30** Run Forward	Pr **6.32** Run Reverse	0 (non latching)
1	Pr **6.39** Not stop	Pr **6.30** Run Forward	Pr **6.32** Run Reverse	1 (latching)
2	Pr **6.29** Hardware Enable	Pr **6.34** Run	Pr **6.33** Fwd /Rev	0 (non latching)
3	Pr **6.39** Not stop	Pr **6.34** Run	Pr **6.33** Fwd/Rev	1 (latching)
4	User prog	User prog	User prog	User prog

Figure 5-21 Digital input connections when Pr 6.04 is set between 0 - 3

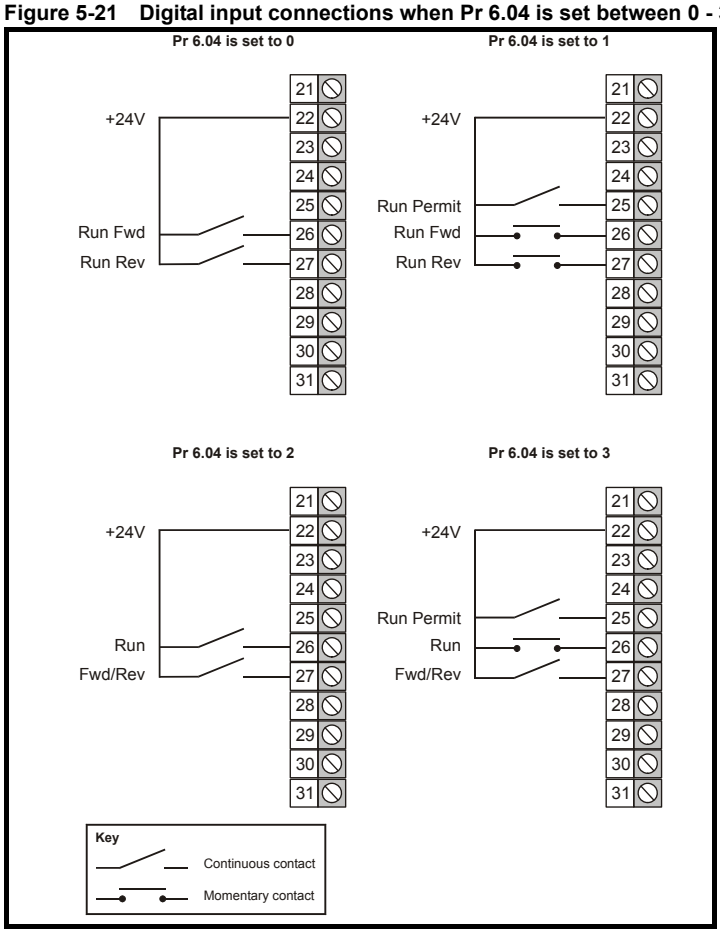

6.08	**Hold zero speed**															
Coding	Bit	SP	FI	DE	Txt	VM	DP	ND	RA	NC	NV	PT	US	RW	BU	PS
	1												1	1		
Default	0															
Update rate	4 ms read															

When this bit is set the drive remains active even when the run command has been removed and the motor has reached standstill. The drive goes to the 'StoP' state instead of the 'rdy' state.

6.09	Catch a spinning motor															
Coding	Bit	SP	FI	DE	Txt	VM	DP	ND	RA	NC	NV	PT	US	RW	BU	PS
	1												1	1	1	
Range	0 to 1															
Default	1															
Update rate	Background read															

When the drive is enabled with this parameter at zero, the post ramp reference (Pr **2.01 = {di03, 0.38}**) starts at zero and ramps to the required reference. When the drive is enabled with this parameter at one, the post ramp reference is set to the motor speed.

6.12	Enable stop key															
Coding	Bit	SP	FI	DE	Txt	VM	DP	ND	RA	NC	NV	PT	US	RW	BU	PS
	1												1	1		
Default	0															
Update rate	Background read															

This parameter permanently enables the Stop key on the drive such that the drive will always stop when the Stop key is pressed. If keypad mode is selected this has no effect because the Stop key is automatically enabled.

The sequencer logic has been designed so that pressing the Stop key, whether the Stop key is enabled or not, does not make the drive change from a stopped to a running condition. As the Stop key is also used to reset trips this means that if the Stop key is pressed when the drive is tripped, the trip will be reset, but the drive does not start. Preventing the drive from starting when the stop key is pressed is implemented as follows.

Sequencer latching not enabled (Pr 6.40=0)

If the Stop key is pressed when the Stop key is enabled (Pr **6.12**=1) or when the drive is tripped the sequencer run is removed, and so the drive stops or remains stopped respectively. The sequencer run can only then be reapplied after at least one of the following conditions occurs.

1. Run forward, Run reverse and Run sequencing bits all zero
2. OR the drive is disabled via Pr **6.15** or Pr **6.29**
3. OR Run forward and Run reverse are both active and have been for 60 ms.

The drive can be re-started by activating the necessary bits to give a normal start.

Sequencer latching enabled (Pr 6.40=1)

If the Stop key is pressed when the stop key is enabled (Pr **6.12**=1) or when the drive is tripped the sequencer run is removed, and so the drive stops or remains stopped respectively. The sequencer run can only then be reapplied after at least one of the following conditions occurs.

1. Run forward, Run reverse and Run sequencing bits all zero after the latches
2. OR Not stop sequencing bit is zero
3. OR the drive is disabled via Pr **6.15** or Pr **6.29**
4. OR Run forward and Run reverse are both active and have been for 60 ms.

The drive can then be re-started by activating the necessary bits to give a normal start.

Note that applying the Run forward and Run reverse together will reset the stop key condition, but the latches associated with Run forward and Run reverse must then be reset before the drive can be re-started. It should be noted holding the Run key and pressing the Stop key to reset the drive without stopping does not apply unless keypad reference mode is selected.

6.13	Enable forward/reverse key															
Coding	Bit	SP	FI	DE	Txt	VM	DP	ND	RA	NC	NV	PT	US	RW	BU	PS
													1	1		
Range	0 to 2															
Default	0															
Update rate	Background read															

This parameter controls the action of the Fwd/Rev key on the drive in keypad mode.

Pr 6.13	Action of Fwd/Rev key
0	None
1	Reverse select is toggled every time the button is pressed
2	Drive runs in reverse direction

6.15	**Drive enable**															
Coding	Bit	SP	FI	DE	Txt	VM	DP	ND	RA	NC	NV	PT	US	RW	BU	PS
	1												1	1	1	
Default	1															
Update rate	4 ms read															

Setting this parameter to 0 will disable the drive. It must be at 1 for the drive to run.

6.16	**Electricity cost per kWh**															
Coding	Bit	SP	FI	DE	Txt	VM	DP	ND	RA	NC	NV	PT	US	RW	BU	PS
							1						1	1	1	
Range	0.0 to 600.0 currency units per kWh															
Default	0.0															
Update rate	Background read															

When this parameter is set up correctly for the local currency, Pr **6.26** will give an instantaneous read out of running cost.

6.17	**Reset energy meter**															
Coding	Bit	SP	FI	DE	Txt	VM	DP	ND	RA	NC	NV	PT	US	RW	BU	PS
	1									1				1		
Default	0															
Update rate	Background read															

If this parameter is one the energy meter (Pr **6.24** and Pr **6.25**) is reset and held at zero.

6.18	**Time between filter changes**															
Coding	Bit	SP	FI	DE	Txt	VM	DP	ND	RA	NC	NV	PT	US	RW	BU	PS
													1	1	1	
Range	0 to 30,000 hrs															
Default	0															
Update rate	Background read															

To enable the feature that indicates to the user when a filter change is due Pr **6.18** should be set to the time between filter changes.

6.19	**Filter change required / change done**															
Coding	Bit	SP	FI	DE	Txt	VM	DP	ND	RA	NC	NV	PT	US	RW	BU	PS
	1											1		1		
Default	0															
Update rate	Background read/write															

When the drive is running, Pr **6.27** is reduced each time the runtime timer hour increments (Pr **6.23**) until Pr **6.27** reaches 0, at which point Pr **6.19** is set to 1 to inform the user that a filter change is required. When the user has changed the filter, resetting Pr **6.19** to 0 will indicate to the drive that the change has been done and Pr **6.27** will be reloaded with the value of Pr **6.18**. Pr **6.27** can be updated with the value of Pr **6.18** at any time by setting and clearing this parameter manually.

6.20	**Powered-up time: years.days**															
Coding	Bit	SP	FI	DE	Txt	VM	DP	ND	RA	NC	NV	PT	US	RW	BU	PS
							3	1		1		1		1	1	
Range	0 to 9.364 Years.Days															
Update rate	Background write															

The powered-up clock always starts at zero each time the drive is powered-up. The user can change the time from the keypad, serial comms or an application module. If the data is not written with the various parts in the correct range (i.e. minutes are greater than 59, etc.) the clock is set to zero on the next minute. This clock may be used for time stamping the trip log if Pr **6.28** = 0. This parameter is used in conjunction with Pr **6.21**.

6.21	**Powered-up time: hours.minutes**															
Coding	Bit	SP	FI	DE	Txt	VM	DP	ND	RA	NC	NV	PT	US	RW	BU	PS
							2	1		1		1		1	1	
Range	0 to 23.59 Hours.Minutes															
Update rate	Background write															

See description for Pr **6.20**.

6.22	**Run time: years.days**															
Coding	Bit	SP	FI	DE	Txt	VM	DP	ND	RA	NC	NV	PT	US	RW	BU	PS
							3	1		1		1			1	1
Range	0 to 9.364 Years.Days															
Update rate	Background write															

The run time clock increments when the drive output stage is active to indicate the number of minutes that the drive has been running since leaving the manufacturing plant. This clock may be used for time stamping the trip log if Pr **6.28** = 1.

This parameter is used in conjunction with Pr **6.23**.

6.23	**Run time: hours.minutes**															
Coding	Bit	SP	FI	DE	Txt	VM	DP	ND	RA	NC	NV	PT	US	RW	BU	PS
							2	1		1		1			1	1
Range	0 to 23.59 Hours.Minutes															
Update rate	Background write															

See description for Pr **6.22**.

6.24	**Energy meter: MWh**															
Coding	Bit	SP	FI	DE	Txt	VM	DP	ND	RA	NC	NV	PT	US	RW	BU	PS
							1	1		1		1				1
Range	±9999 MWh															
Update rate	Background write															

Pr **6.24** and Pr **6.25** form the energy meter that indicates energy supplied to/from the drive in MWh and kWh.

For motor control modes a positive value indicates net transfer of energy from the drive to the motor. The energy meter is reset and held at zero when Pr **6.17** is one.

This parameter is used in conjunction with Pr **6.25**.

6.25	**Energy meter: kWh**															
Coding	Bit	SP	FI	DE	Txt	VM	DP	ND	RA	NC	NV	PT	US	RW	BU	PS
							2	1		1		1				1
Range	±999 kWh															
Update rate	Background write															

See description for Pr **6.24.**

6.26	**Running cost**															
Coding	Bit	SP	FI	DE	Txt	VM	DP	ND	RA	NC	NV	PT	US	RW	BU	PS
			1					1		1		1				
Range	±32,000															
Update rate	Background write															

Instantaneous read out of the cost/hour of running the drive. This requires Pr **6.16** to be set up correctly.

6.27	**Time before filter change due**															
Coding	Bit	SP	FI	DE	Txt	VM	DP	ND	RA	NC	NV	PT	US	RW	BU	PS
								1		1		1			1	1
Range	0 to 30,000 hrs															
Update rate	Background read															

See Pr **6.18.**

6.28	**Select clock for trip log time stamping**															
Coding	Bit	SP	FI	DE	Txt	VM	DP	ND	RA	NC	NV	PT	US	RW	BU	PS
	1												1	1		
Default	0															
Update rate	Background read															

If Pr **6.28** = 0, the powered-up clock is used for time stamping.

If Pr **6.28** = 1, the run time clock is used for time stamping.

It should be noted that changing this parameter clears the trip and trip time logs.

6.29	**Hardware enable**															
Coding	Bit	SP	FI	DE	Txt	VM	DP	ND	RA	NC	NV	PT	US	RW	BU	PS
	1									1		1				
Update rate	4 ms write															

This bit shows whether the drive is in the enable state or not.
Generally this will reflect the state of the enable input and shows the same value as Pr **8.09**. However the disabled state can be forced by inputs routed to this parameter. Pr **8.09** will always follow the enable input state but Pr **6.29** will be held at zero, indicating that the drive is forced into the disable state by an input.

6.30	**Sequencing bit: Run forward**															
Coding	Bit	SP	FI	DE	Txt	VM	DP	ND	RA	NC	NV	PT	US	RW	BU	PS
	1									1				1		
Default	0															
Update rate	4 ms read															

See Pr **6.34** for description.

6.31	**Sequencing bit: Jog**															
Coding	Bit	SP	FI	DE	Txt	VM	DP	ND	RA	NC	NV	PT	US	RW	BU	PS
	1									1				1		
Default	0															
Update rate	4 ms read															

See Pr **6.34** for description.

6.32	**Sequencing bit: Run reverse**															
Coding	Bit	SP	FI	DE	Txt	VM	DP	ND	RA	NC	NV	PT	US	RW	BU	PS
	1									1				1		
Default	0															
Update rate	4 ms read															

See Pr **6.34** for description.

6.33	**Sequencing bit: Forward/reverse**															
Coding	Bit	SP	FI	DE	Txt	VM	DP	ND	RA	NC	NV	PT	US	RW	BU	PS
	1									1				1		
Default	0															
Update rate	4 ms read															

See Pr **6.34** for description.

6.34	Sequencing bit: Run															
Coding	Bit	SP	FI	DE	Txt	VM	DP	ND	RA	NC	NV	PT	US	RW	BU	PS
	1									1				1		
Default	0															
Update rate	4 ms read															

In normal operation the sequencer has been designed to operate with Run forward / Run reverse controls, or with a Run control and a forward reverse selector. If Run forwards / Run reverse control is required then bits Pr **6.30** and Pr **6.32** should be used to control the drive (digital inputs should not be routed to bits Pr **6.33** and Pr **6.34**). If Run control with a forward reverse selector is required then bits Pr **6.33** and Pr **6.34** should be used to control the drive (digital inputs should not be routed to bits Pr **6.30** and Pr **6.32**).

The Run forward and Run reverse bits can be made latching by setting bit Pr **6.40**. The Not stop bit (Pr **6.39**) should be one to allow the sequencing bit to be latched. If the Not stop bit is zero all latches are cleared and held at zero. The jog or jog reverse sequencing bits can also cause the drive to run provided the motor is stopped when these bits are activated and the normal run sequencing bits are not providing a run signal.

6.35	Forward limit switch															
Coding	Bit	SP	FI	DE	Txt	VM	DP	ND	RA	NC	NV	PT	US	RW	BU	PS
	1									1				1		
Default	0															
Update rate	250 µs read															

6.36	Reverse limit switch															
Coding	Bit	SP	FI	DE	Txt	VM	DP	ND	RA	NC	NV	PT	US	RW	BU	PS
	1									1				1		
Default	0															
Update rate	250 µs read															

Digital inputs connected to limit switches should be routed to these parameters if fast stopping is required at a limit. The drive will respond in 750 µs (500 µs digital input filter delay + 250 µs software delay) and stop the motor with a zero deceleration ramp rate (i.e. in current limit).

The limit switches are direction dependant so that the motor can rotate in a direction that allows the system to move away from the limit switch.

Pre-ramp reference+hard speed reference > 0 rpm Forward limit switch active

Pre-ramp reference+hard speed reference < 0 rpm Reverse limit switch active

Pre-ramp reference+hard speed reference = 0 rpm Both limit switches active

6.37	Sequencing bit: Jog reverse															
Coding	Bit	SP	FI	DE	Txt	VM	DP	ND	RA	NC	NV	PT	US	RW	BU	PS
	1									1				1		
Default	0															
Update rate	4 ms read															

6.39	Sequencing bit: Not stop															
Coding	Bit	SP	FI	DE	Txt	VM	DP	ND	RA	NC	NV	PT	US	RW	BU	PS
	1									1				1		
Default	0															
Update rate	4 ms read															

6.40	Enable sequencer latching															
Coding	Bit	SP	FI	DE	Txt	VM	DP	ND	RA	NC	NV	PT	US	RW	BU	PS
	1												1	1		
Default	0															
Update rate	4 ms read															

6.41	**Drive event flags**															
Coding	Bit	SP	FI	DE	Txt	VM	DP	ND	RA	NC	NV	PT	US	RW	BU	PS
										1				1	1	
Range	0 to 65535															
Default	0															
Update rate	Background write															

The drive event flags indicate certain actions have occurred within the drive as described below.

Defaults loaded (Bit 0)

The drive sets bit 0 when defaults have been loaded and the associated parameter save has been completed. The drive does not reset this flag except at power-up. This flag is intended to be used by SM-Applications Solutions Module programs to determine when the default loading process is complete. For example an application may require defaults that are different from the standard drive defaults. These may be loaded and another parameter save initiated by the SM-Applications module when this flag is set. The flag should then be cleared so that the next event can be detected.

6.42	**Control word**															
Coding	Bit	SP	FI	DE	Txt	VM	DP	ND	RA	NC	NV	PT	US	RW	BU	PS
										1				1	1	
Range	0 to 32,767															
Default	0															
Update rate	Bits 0 –7: 4 ms read, Bits 8-15: Background read															

6.43	**Control word enable**															
Coding	Bit	SP	FI	DE	Txt	VM	DP	ND	RA	NC	NV	PT	US	RW	BU	PS
	1												1	1		
Default	0															
Update rate	Related to bits 0-7: 4 ms read, related to bits 8-15: Background read															

Pr **6.42** and Pr **6.43** provide a method of controlling the sequencer inputs and other functions directly from a single control word. If Pr **6.43** = 0 the control word has no effect, if Pr **6.43** = 1 the control word is enabled. Each bit of the control word corresponds to a sequencing bit or function as shown below.

Bit	Function	Equivalent parameter
0	Drive enable	Pr **6.15**
1	Run forward	Pr **6.30**
2	Jog	Pr **6.31**
3	Run reverse	Pr **6.32**
4	Forward/reverse	Pr **6.33**
5	Run	Pr **6.34**
6	Not stop	Pr **6.39**
7	Auto/manual	
8	Analog/Preset reference	Pr **1.42**
9	Jog reverse	Pr **6.37**
10	Reserved	
11	Reserved	
12	Trip drive	
13	Reset drive	Pr **10.33**
14	Keypad watchdog	

Bits 0-7 and bit 9: sequencing control

When the control word is enabled (Pr **6.43** = 1), and the Auto/manual bit (bit7) are both one, bits 0 to 6 and bit 9 of the control word become active. The equivalent parameters are not modified by these bits, but become inactive when the equivalent bits in the control word are active. When the bits are active they replace the functions of the equivalent parameters. For example, if Pr **6.43** = 1 and bit 7 of Pr **6.42** = 1 the drive enable is no longer controlled by Pr **6.15**, but by bit 0 of the control word. If either Pr **6.43** = 0, or bit 7 of Pr **6.42** = 0, the drive enable is controlled by Pr **6.15**.

Bit 8: Analog/preset reference

When the control word is enabled (Pr **6.43**) bit 8 of the control word becomes active. (Bit 7 of the control word has no effect on this function.) The state of bit 8 is written to Pr **1.42**. With default drive settings this selects analog reference 1 (bit8 = 0) or preset reference 1 (bit8 = 1). If any other drive parameters are routed to Pr **1.42** the value of Pr **1.42** is undefined.

Bit12: Trip drive

When the control word is enabled (Pr **6.43**) bit 12 of the control word becomes active. (Bit 7 of the control word has no effect on this function.) When bit 12 is set to one a CL.bit trip is initiated. The trip cannot be cleared until the bit is set to zero

Bit 13: Reset drive

When the control word is enabled (Pr **6.43**) bit 13 of the control word becomes active. (Bit 7 of the control word has no effect on this function.) When bit 13 is changed from 0 to 1 the drive is reset. This bit does not modify the equivalent parameter (Pr **10.33**).

Bit 14: Keypad watchdog

When the control word is enabled (Pr **6.43**) bit 14 of the control word becomes active. (Bit 7 of the control word has no effect on this function.) A watchdog is provided for an external keypad or other device where a break in the communication link must be detected. The watchdog system can be enabled and/or serviced if bit 14 of the control word is changed from zero to one with the control word enabled. Once the watchdog is enabled it must be serviced at least once every second or an "SCL" trip occurs. The watchdog is disabled when an "SCL" trip occurs, and so it must be re-enabled when the trip is reset.

6.45	Force cooling fan to run at full speed															
Coding	Bit	SP	FI	DE	Txt	VM	DP	ND	RA	NC	NV	PT	US	RW	BU	PS
	1												1	1		
Default	0															
Update rate	Background read															

The drive thermal model system normally controls the fan speed, however the fan can be forced to operate at full speed if this parameter is set to 1. When this is set to 1 the fan remains at full speed until 10 s after this parameter is set to zero.

Note when the drive is in the UU state, the fan always runs at minimum speed.

6.50	Drive comms state															
Coding	Bit	SP	FI	DE	Txt	VM	DP	ND	RA	NC	NV	PT	US	RW	BU	PS
					1			1		1		1			1	
Default	0 to 3															
Update rate	Background write															

The drive comms system 128 bytes buffer used with ANSI or Modbus rtu protocols via the 485 connector can be controlled by a Solutions Module under certain circumstances. This parameter shows which node has control of the buffer (0 (drv) = drive, 1 (Slot1) = Solutions Module in slot 1, etc. If a Solutions Module has control of the buffer the drive will use an alternative buffer for 485 comms and the following restrictions will apply:

1. Comms messages via the 485 port are limited to a maximum of 32 bytes
2. The 6 pin keypad port will operate correctly with an LED keypad, but it will no longer operate with an LCD keypad
3. Modbus messages using the CMP protocol can only route messages to nodes within the drive. It will not be possible for these to be routed further, i.e. via CT Net on an SM Applications module.

6.52	Zero reference interlock															
Coding	Bit	SP	FI	DE	Txt	VM	DP	ND	RA	NC	NV	PT	US	RW	BU	PS
	1												1	1		
Default	0															
Update rate	Background read															

When this parameter is 1 the reference has to be below 0.8 % of full speed before the sequencer can go to the run state.

6.54	Run rising edge delay															
Coding	Bit	SP	FI	DE	Txt	VM	DP	ND	RA	NC	NV	PT	US	RW	BU	PS
							1						1	1		
Range	0 to 25.0 s															
Default	0.3															
Update rate	Background read															

When using the contactor logic the run command has to be delayed to allow time for the contactor to change before allowing the firing pulses.

6.55	Contactor active															
Coding	Bit	SP	FI	DE	Txt	VM	DP	ND	RA	NC	NV	PT	US	RW	BU	PS
	1							1		1		1				
Update rate	Background write															

This parameter can be used to control an external contactor.

6.56	**Drive active falling edge delay**															
Coding	Bit	SP	FI	DE	Txt	VM	DP	ND	RA	NC	NV	PT	US	RW	BU	PS
												1	1	1		
Range	0 to 255 s															
Default	0 s															
Update rate	Background read															

This parameter provides a delay on a falling edge of the drive active flag.

Figure 5-22 Contactor logic

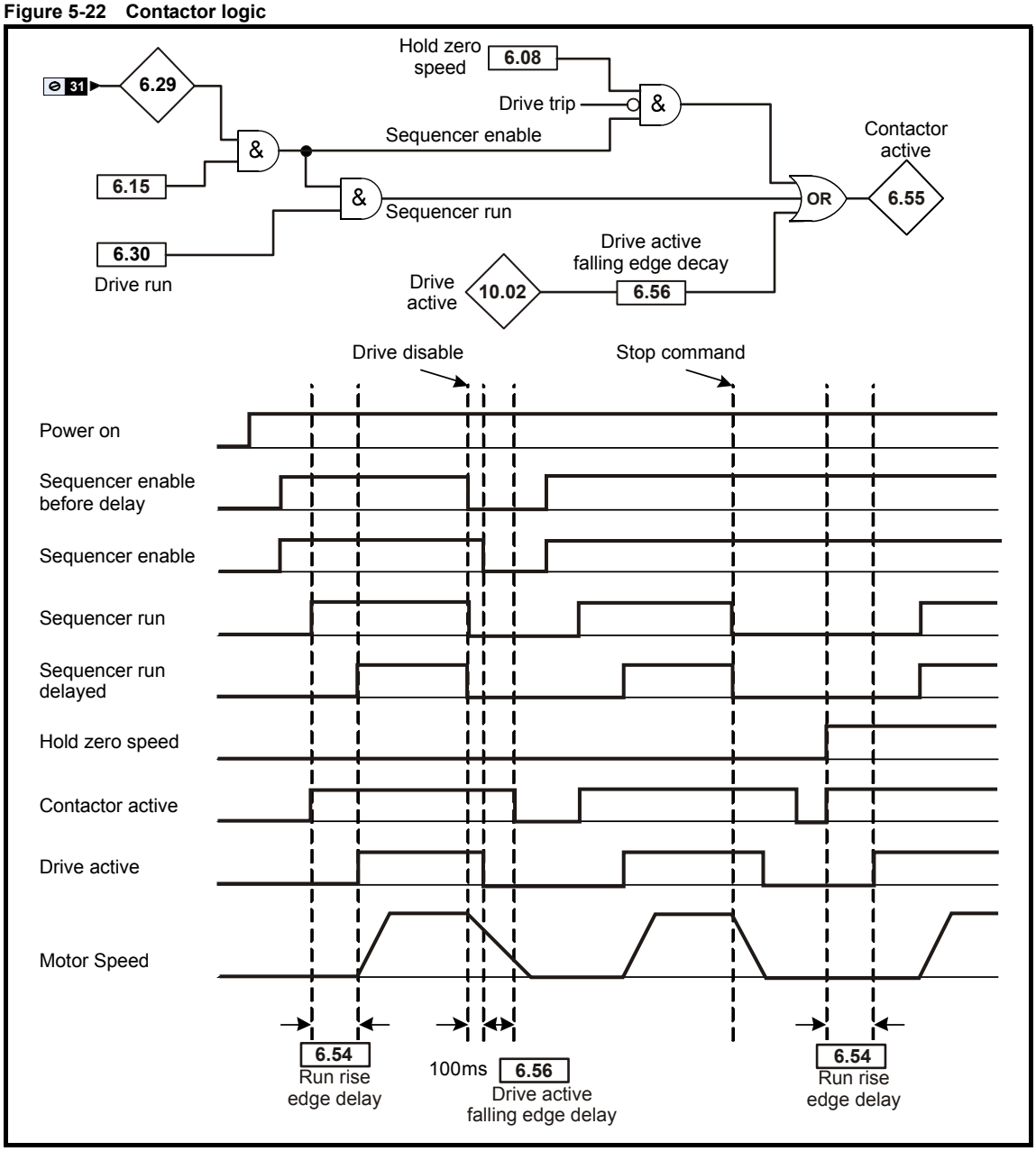

5.8 Menu 7: Analog I/O

Hardware

The drive has three analog inputs (AI1 to AI3) and two analog outputs (AO1 and AO2). Each input has a similar parameter structure and each output has a similar parameter structure. The nominal full scale level for inputs in voltage mode is 10 V. This ensures that when the input is driven from a voltage produced from the drive's own 10 V supply, the input can reach full scale.

Terminal	Input	Input modes	Resolution
5/6	AI1	Voltage only	14 bit plus sign
7	AI2	0 to 6	10 bit plus sign
8	AI3	0 to 9	10 bit plus sign

Terminal	Output	Output modes	Resolution
9	AO1	0 to 3	10 bit plus sign
10	AO2	0 to 3	10 bit plus sign

Update rate

The analog inputs are sampled every 4 ms except where the destinations shown in the table below are chosen, the input is in voltage mode and other conditions necessary for short cutting are met.

Input destination	Sample rate
Pr **1.36** - Analog reference	250 µs
Pr **1.37** - Analog reference	250 µs
Pr **3.22** - Hard speed reference	250 µs
Pr **4.08** - Torque reference	250 µs AI1, AI2 or AI3

Analog outputs are updated every 4 ms except when one of the following is the source and high speed update mode is selected. In high speed mode the output operates in voltage mode, is updated every 250 µs, special scaling is used as described in the table and the user scaling is ignored.

Output source	Scaling
Pr **3.02 = {di05, 0.40}** - Speed	10.0 V = SPEED_MAX
Pr **4.01 = {di08, 0.43}** - Current magnitude	10.0 V = 2 x Motor rated current

Figure 5-23 Menu 7 logic diagram

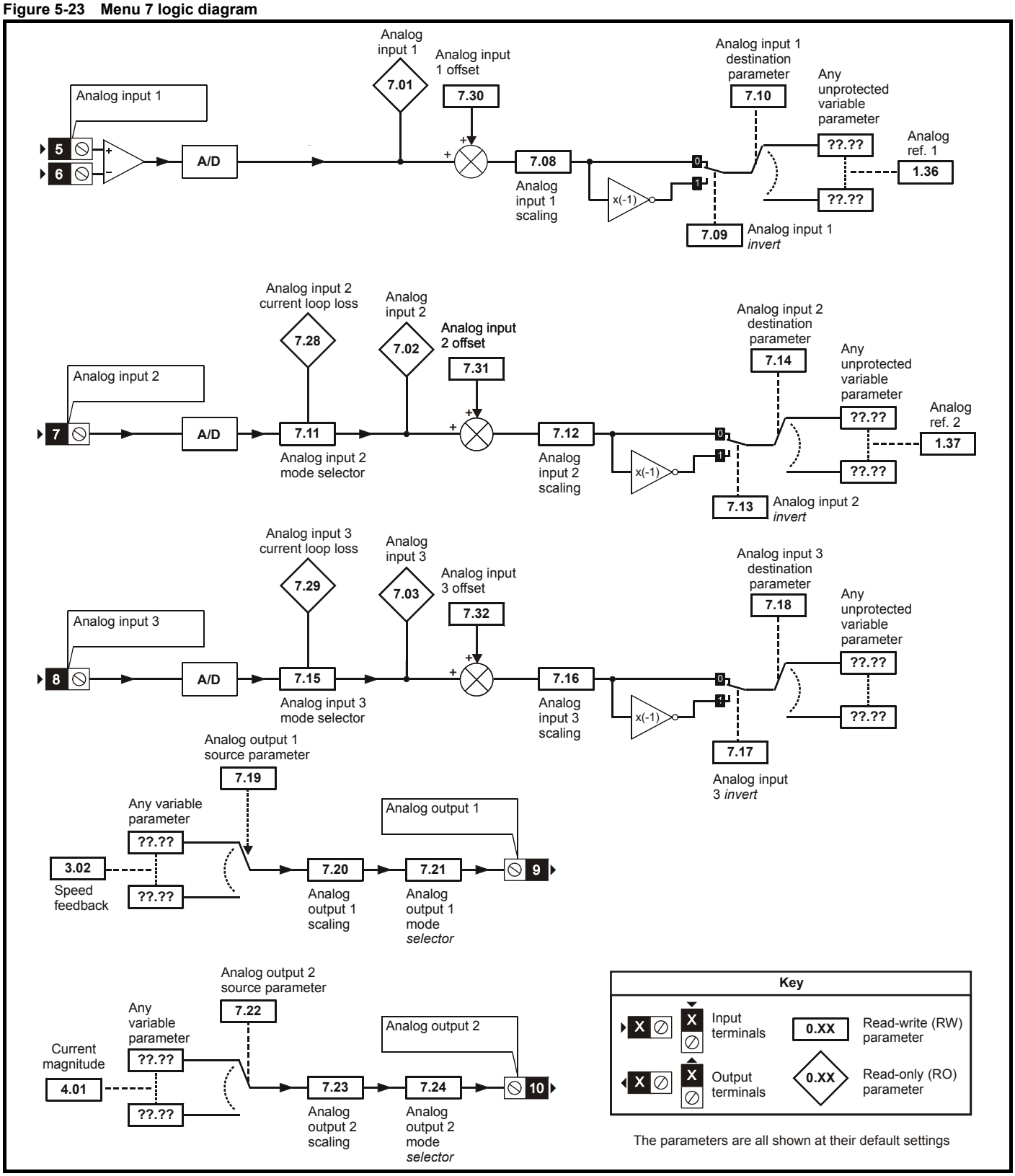

7.01 {in02, 0.82}	T5/6 analog input 1															
Coding	Bit	SP	FI	DE	TE	VM	DP	ND	RA	NC	NV	PT	US	RW	BU	PS
							2	1		1		1				
Range	±100.00 %															
Update rate	4 ms write															

7.02 {in03, 0.83}	T7 analog input 2															
7.03 {in04, 0.84}	T8 analog input 3															
Coding	Bit	SP	FI	DE	TE	VM	DP	ND	RA	NC	NV	PT	US	RW	BU	PS
							1	1		1		1				
Range	±100.0 %															
Update rate	4 ms write															

When analog input 3 is in thermistor mode the display indicates the resistance of the thermistor as a percentage of 10k Ω

7.04	Power circuit temperature															
Coding	Bit	SP	FI	DE	TE	VM	DP	ND	RA	NC	NV	PT	US	RW	BU	PS
								1		1		1				
Range	-128 to 127° C															
Update rate	Background write															

If the temperature displayed in Pr **7.04** exceeds the trip threshold for the parameter an Oht2 trip is initiated. This trip can only be reset if the parameter that has caused the trip falls below the trip reset level. If the temperature exceeds the alarm level, a "hot" alarm is displayed. If the temperature for any of these monitoring points is outside the range -20° C to 150° C, it is assumed that the monitoring thermistor has failed and a hardware fault trip is initiated (HF27), details are given in the following table.

Power stage temperature 1 (Pr **7.04**) in ° C.

Drive	O.ht2 Trip temperature	Release from O.ht2	Warning temperature
MP25A4(R)	100	95	90
MP45A4(R)			
MP75A4(R)			
MP105A4(R)			
MP155A4(R)			
MP210A4(R)	94	90	85
MP25A5(R)	100	95	90
MP45A5(R)			
MP105A5(R)			
MP155A5(R)			
MP210A5(R)	94	90	85
MP350A4(R)	105	100	95
MP420A4(R)			
MP550A4(R)	100	95	90
MP700A4(R)	105	100	95
MP825A4(R)			
MP900A4(R)	100	95	90
MP1200A4(R)	110	100	95
MP1850A4(R)			
MP350A5(R)	100	95	90
MP470A5(R)	81	75	70
MP700A5(R)	100	95	90
MP825A5(R)	94	90	85
MP1200A5(R)	110	100	95
MP1850A5(R)			
MP350A6(R)	100	95	90
MP470A6(R)	81	75	70

MP700A6(R)	100	95	90
MP825A6(R)	94	90	85
MP1200A6(R)	110	100	95
MP1850A6(R)			

7.08	**T5/6 analog input 1 scaling**															
Coding	Bit	SP	FI	DE	TE	VM	DP	ND	RA	NC	NV	PT	US	RW	BU	PS
							3						1	1	1	
Range	0.000 to 40.000															
Default	1.000															
Update rate	Background read															

7.09	**T5/6 analog input 1 invert**															
Coding	Bit	SP	FI	DE	TE	VM	DP	ND	RA	NC	NV	PT	US	RW	BU	PS
	1												1	1		
Default	0															
Update rate	Background read															

7.10	**T5/6 analog input 1 destination**															
Coding	Bit	SP	FI	DE	TE	VM	DP	ND	RA	NC	NV	PT	US	RW	BU	PS
				1			2					1	1	1	1	
Range	Pr **0.00** to Pr **22.99**															
Default	Pr **1.36**															
Update rate	Read on drive reset															

7.11	**T7 analog input 2 mode**															
Coding	Bit	SP	FI	DE	TE	VM	DP	ND	RA	NC	NV	PT	US	RW	BU	PS
					1								1	1	1	
Range	0 to 6															
Default	6															
Update rate	Background read															

The following modes are available for the analog inputs 2 and 3.

In modes 2 and 3 a current loop loss trip is generated if the input current falls below 3 mA.

In modes 4 and 5 the analog input level goes to 0.0 % if the input current falls below 3 mA.

Modes 7, 8 and 9 are only available with analog input 3.

Parameter value	Parameter string	Mode	Comments
0	0-20	0 - 20 mA	
1	20-0	20 - 0 mA	
2	4-20.tr	4 - 20 mA with trip on loss	Trip if I < 3 mA
3	20-4.tr	20 - 4 mA with trip on loss	Trip if I < 3 mA
4	4-20	4 - 20 mA with no trip on loss	
5	20-4	20 - 4 mA with no trip on loss	
6	VOLt	Voltage mode	
7	th.SC	Thermistor with short circuit detection	TH trip if R > 3 k 3 TH reset if R < 1 k 8 THS trip if R < 50 R
8	th	Thermistor without short circuit detection	TH trip if R > 3 k 3 TH reset if R < 1 k 8
9	th diSp	Thermistor display only with no trip	

7.12	T7 analog input 2 scaling															
Coding	Bit	SP	FI	DE	TE	VM	DP	ND	RA	NC	NV	PT	US	RW	BU	PS
							3						1	1	1	
Range	0.000 to 40.000															
Default	1.000															
Update rate	Background read															

7.13	T7 analog input 2 invert															
Coding	Bit	SP	FI	DE	TE	VM	DP	ND	RA	NC	NV	PT	US	RW	BU	PS
	1												1	1		
Default	0															
Update rate	Background read															

7.14	T7 analog input 2 destination															
Coding	Bit	SP	FI	DE	TE	VM	DP	ND	RA	NC	NV	PT	US	RW	BU	PS
				1			2					1	1	1	1	
Range	Pr **0.00** to Pr **22.99**															
Default	Pr **1.37**															
Update rate	Read on drive reset															

7.15 {in01, 0.81}	T8 analog input 3 mode															
Coding	Bit	SP	FI	DE	TE	VM	DP	ND	RA	NC	NV	PT	US	RW	BU	PS
					1								1	1	1	
Range	0 to 9															
Default	Eur: 8, USA: 6															
Update rate	Background read															

See Pr **7.11** for a description

7.16	T8 analog input 3 scaling															
Coding	Bit	SP	FI	DE	TE	VM	DP	ND	RA	NC	NV	PT	US	RW	BU	PS
							3						1	1	1	
Range	0.000 to 40.000															
Default	1.000															
Update rate	Background read															

7.17	T8 analog input 3 invert															
Coding	Bit	SP	FI	DE	TE	VM	DP	ND	RA	NC	NV	PT	US	RW	BU	PS
	1												1	1		
Default	0															
Update rate	Background read															

7.18	T8 analog input 3 destination															
Coding	Bit	SP	FI	DE	TE	VM	DP	ND	RA	NC	NV	PT	US	RW	BU	PS
				1			2					1	1	1	1	
Range	Pr **0.00** to Pr **22.99**															
Default	Pr **0.00**															
Update rate	Read on drive reset															

7.19	**T9 analog output 1 source**															
Coding	Bit	SP	FI	DE	TE	VM	DP	ND	RA	NC	NV	PT	US	RW	BU	PS
							2					1	1	1	1	
Range	Pr **0.00** to Pr **22.99**															
Default	Pr **3.02 = {di05, 0.40}**															
Update rate	Read on drive reset															

7.20	**T9 analog output 1 scaling**															
Coding	Bit	SP	FI	DE	TE	VM	DP	ND	RA	NC	NV	PT	US	RW	BU	PS
							3						1	1	1	
Range	0.000 to 40.000															
Default	1.000															
Update rate	Background read															

7.21	**T9 analog output 1 mode**															
Coding	Bit	SP	FI	DE	TE	VM	DP	ND	RA	NC	NV	PT	US	RW	BU	PS
					1								1	1	1	
Range	0 to 3															
Default	0															
Update rate	Background read															

The following modes are available for the analog outputs.

Parameter value	Parameter string	Mode
0	VOLt	Voltage mode
1	0-20	0 - 20 mA
2	4-20	4 - 20 mA
3	H.Spd	High speed up date mode

If high-speed update mode is selected and the source for the output is one of the parameters designated for high-speed analog output operation (see start of this section) the output is updated at a higher rate with special scaling. If the parameter selected is not designated for this mode the output is updated at the normal rate. If speed feedback is selected for high-speed mode for both analog output 1 and analog output 2 the setting is ignored for analog output 2. If the high-speed mode is selected the output is always a voltage signal.

7.22	**T10 analog output 2 source**															
Coding	Bit	SP	FI	DE	TE	VM	DP	ND	RA	NC	NV	PT	US	RW	BU	PS
							2					1	1	1	1	
Range	Pr **0.00** to Pr **22.99**															
Default	Pr **4.02**															
Update rate	Read on drive reset															

7.23	**T10 analog output 2 scaling**															
Coding	Bit	SP	FI	DE	TE	VM	DP	ND	RA	NC	NV	PT	US	RW	BU	PS
							3						1	1	1	
Range	0.000 to 40.000															
Default	1.000															
Update rate	Background read															

7.24	T10 analog output 2 mode															
Coding	Bit	SP	FI	DE	TE	VM	DP	ND	RA	NC	NV	PT	US	RW	BU	PS
					1								1	1	1	
Range	0 to 3															
Default	0															
Update rate	Background read															

See Pr **7.21** description.

7.28	T7 analog input current loop loss 2															
7.29	T8 analog input current loop loss 3															
Coding	Bit	SP	FI	DE	TE	VM	DP	ND	RA	NC	NV	PT	US	RW	BU	PS
	1							1		1		1				
Update rate	Background write															

If an analog input is used with 4-20 mA or 20-4 mA current loop modes the respective bit (Pr **7.28** - analog input 2 and Pr **7.29** -analog input 3) is set to one if the current falls below 3 mA. If the current is above 3 mA with these modes or another mode is selected the respective bit is set to zero.

7.30	T5/6 analog input 1 offset															
Coding	Bit	SP	FI	DE	TE	VM	DP	ND	RA	NC	NV	PT	US	RW	BU	PS
							2						1	1		
Range	±100.00 %															
Default	0.00															
Update rate	Background read															

7.31	T7 analog input 2 offset															
7.32	T8 analog input 3 offset															
Coding	Bit	SP	FI	DE	TE	VM	DP	ND	RA	NC	NV	PT	US	RW	BU	PS
							1						1	1		
Range	±100.0 %															
Default	0.0															
Update rate	Background read															

An offset can be added to each analog input with a range from -100 % to 100 %. If the sum of the input and the offset exceeds ±100 % the results is limited to ±100 %.

7.34	SCR / thyristor junction temperature															
Coding	Bit	SP	FI	DE	TE	VM	DP	ND	RA	NC	NV	PT	US	RW	BU	PS
								1		1		1			1	
Range	0 to 150°C															
Update rate	Background read															

This parameter is an estimate of the SCR / thyristor junction temperature. If the value rises above 120 ^{o}C, the drive will trip O.ht1.

5.9 Menu 8: Digital I/O

The drive has nine digital I/O terminals (T24 to T29, two relays and an enable input) and two buttons. Each input has the same parameter structure. The digital inputs are sampled every 4 ms, except when inputs are routed to the limit switch Pr **6.35** and Pr **6.36** when the sample time is reduced to 250 µs. The digital input hardware introduces a further 100 µs delay. The digital outputs are updated every 4 ms. Any changes to the source/ destination parameters only become effective after a drive reset is activated.

I/O	Sample rate	Function
T24 to T26	4 ms	Digital input or output
T27 to T29	4 ms	Digital input
Relay	Background	
Relay 2	Background	
Buttons	TBD	

Figure 5-24 Menu 8 logic diagram

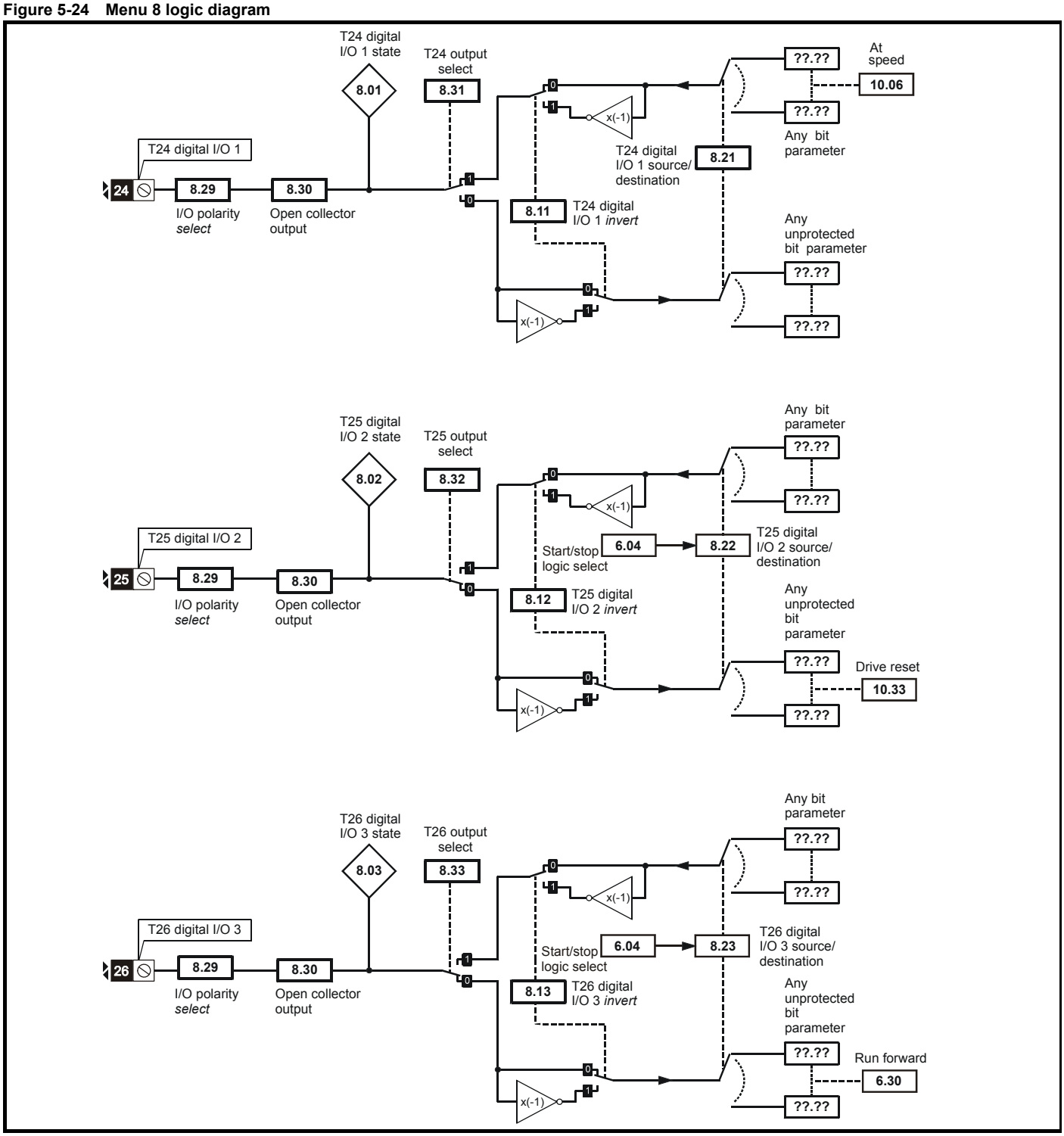

Figure 5-25 Menu 8 logic diagram (cont)

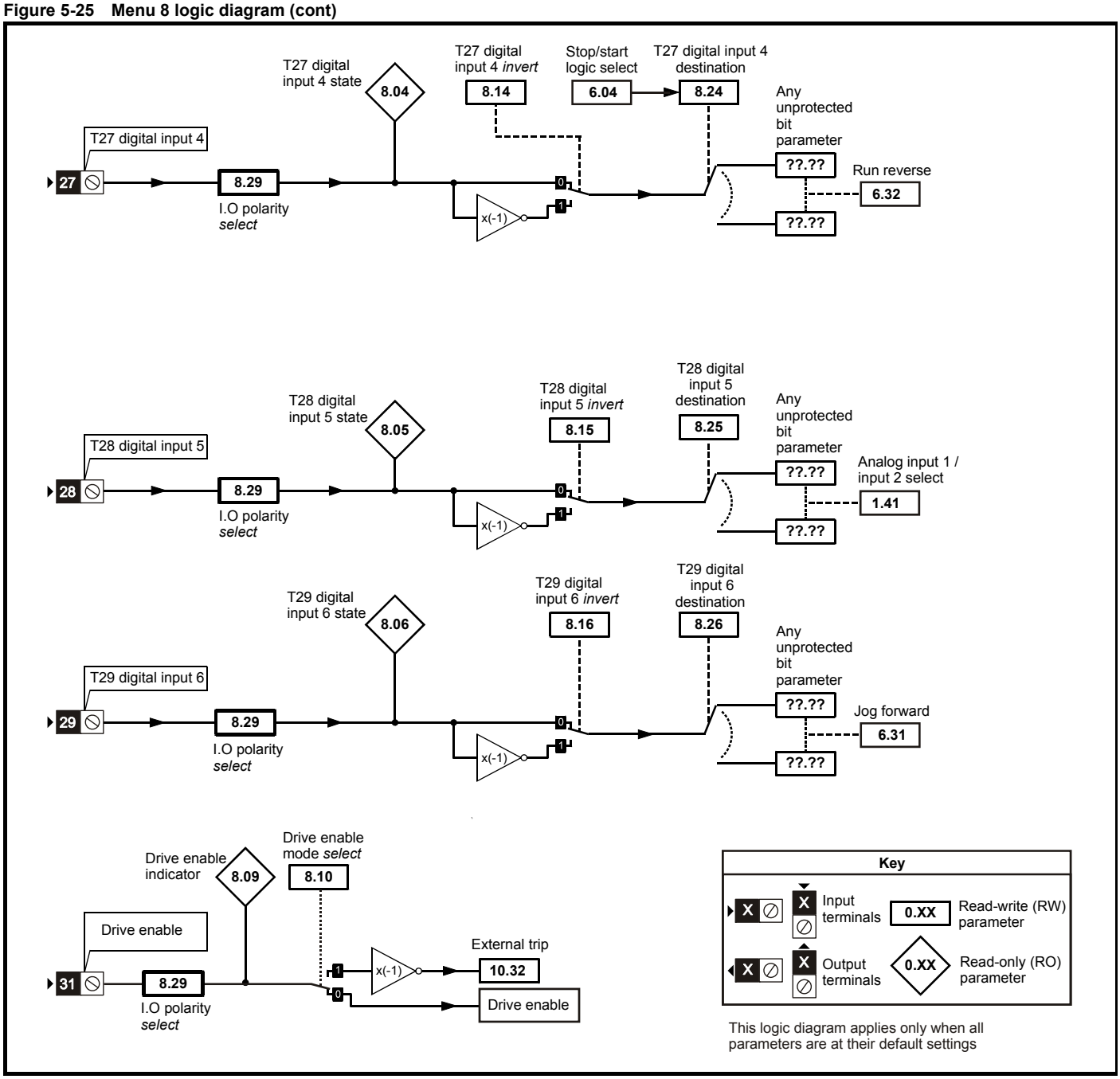

Figure 5-26 Menu 8 logic diagram (cont)

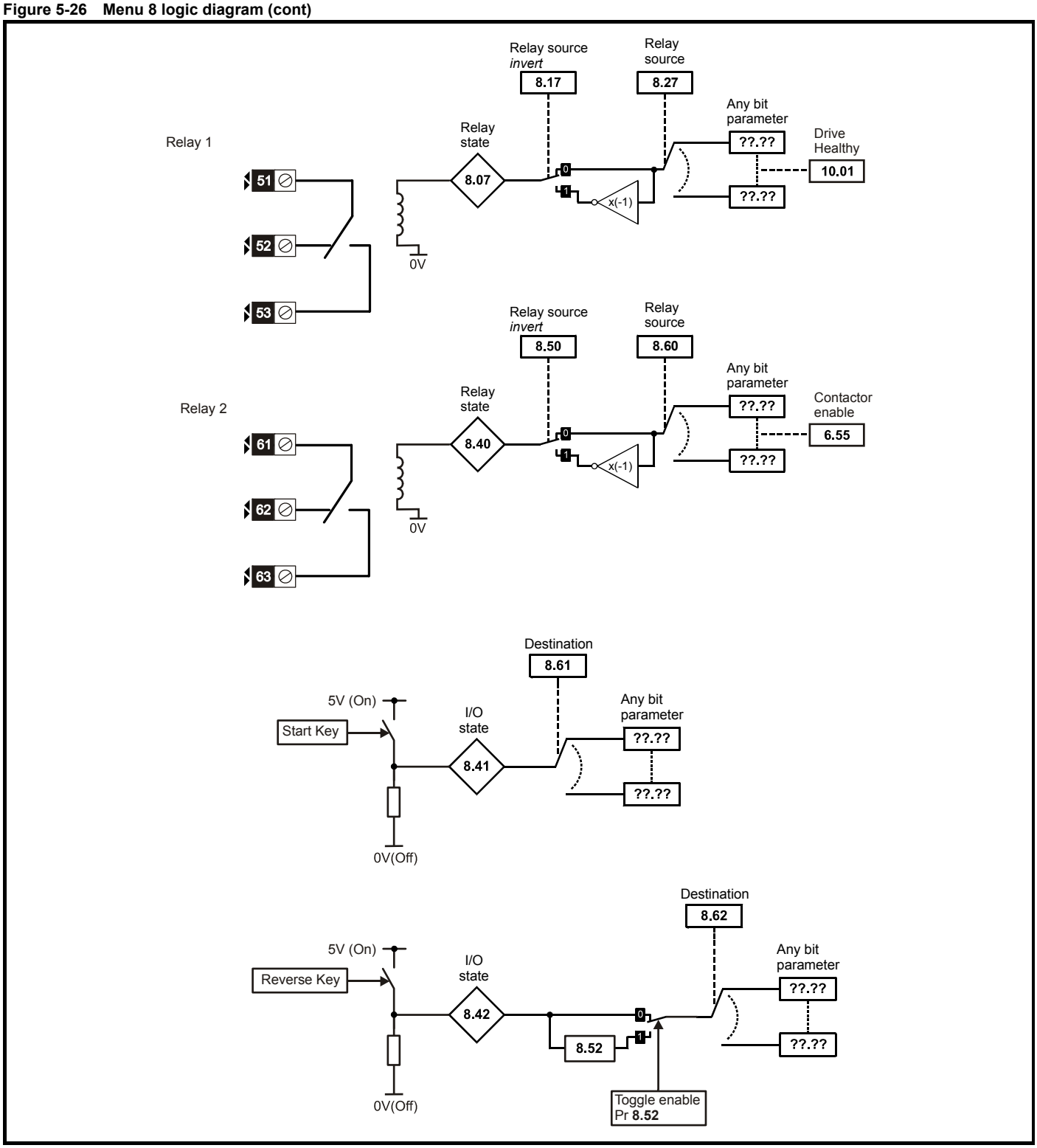

Table 5-7 Digital inputs / outputs

Terminal + type	I/O state	Invert		Source / destination		Output select	
	Pr	Pr	Default	Pr	Default	Pr	Default
T24 input / output 1	Pr **8.01** **= {in05, 0.85}**	Pr **8.11**	0	Pr **8.21**	Pr **10.06** - At speed	Pr **8.31**	1
T25 input / output 2	Pr **8.02** **= {in06, 0.86}**	Pr **8.12**	0	Pr **8.22**	Pr **10.33** - Drive reset	Pr **8.32**	0
T26 input / output 3	Pr **8.03** **= {in07, 0.87}**	Pr **8.13**	0	Pr **8.23**	Pr **6.30** - Run forward	Pr **8.33**	0
T27 input 4	Pr **8.04** **= {in08, 0.88}**	Pr **8.14**	0	Pr **8.24**	Pr **6.32** - Run reverse		
T28 input 5	Pr **8.05** **= {in09, 0.89}**	Pr **8.15**	0	Pr **8.25**	Pr **1.41** - Local/remote		
T29 input 6	Pr **8.06** **= {in10, 0.90}**	Pr **8.16**	0	Pr **8.26**	Pr **6.31** - Jog		
T51, T52, T53 relay state	Pr **8.07**	Pr **8.17**	0	Pr **8.27**	Pr **10.01** - Drive OK		
T31 Enable	Pr **8.09**						
T61, T62, T63 relay state	Pr **8.40**	Pr **8.50**	0	Pr **8.60**	Pr **6.55** - Contactor enable		
Start button	Pr **8.41**			Pr **8.61**	Pr **0.00**		
Forward / Reverse button	Pr **8.42**	Pr **8.52** (toggle)	0	Pr **8.62**	Pr **0.00**		
24 V Input	Pr **8.48**						

8.01 {in05, 0.85}	**T24 digital I/O 1 state**															
8.02 {in06, 0.86}	**T25 digital I/O 2 state**															
8.03 {in07, 0.87}	**T26 digital I/O 3 state**															
8.04 {in08, 0.88}	**T27 digital input 4 state**															
8.05 {in09, 0.89}	**T28 digital input 5 state**															
8.06 {in10, 0.90}	**T29 digital input 6 state**															
8.07	**T51, T52, T53 relay state**															
8.09	**T31 drive enable state**															
Coding	Bit	SP	FI	DE	Txt	VM	DP	ND	RA	NC	NV	PT	US	RW	BU	PS
	1							1		1		1				
Default	See Table 5-7															
Update rate	4 ms write															

OFF (0) = Terminal inactive

ON (1) = Terminal active

8.10	**Enable mode select**															
Coding	Bit	SP	FI	DE	Txt	VM	DP	ND	RA	NC	NV	PT	US	RW	BU	PS
													1	1		
Range	0 to 2															
Default	0															
Update rate	Background read															

As default (Pr **8.10** = 0) the drive is in the inhibit mode when the enable is inactive. Setting this parameter to one causes the enable to behave as an Et trip input. When the input becomes inactive an Et trip is initiated. This does not affect Pr **10.32** (Et trip parameter), therefore an Et trip can be initiated in this mode either by making the enable inactive or setting Pr **10.32** to one.

When this is two, a 0 to 1 change on the terminal will cause a reset.

8.11	**T24 digital I/O 1 invert**															
8.12	**T25 digital I/O 2 invert**															
8.13	**T26 digital I/O 3 invert**															
8.14	**T27 digital input 4 invert**															
8.15	**T28 digital input 5 invert**															
8.16	**T29 digital input 6 invert**															
8.17	**T51, T52, T53 relay invert**															
Coding	Bit	SP	FI	DE	Txt	VM	DP	ND	RA	NC	NV	PT	US	RW	BU	PS
	1												1	1		
Default	Pr **8.11** to Pr **8.17** = OFF (0)															
Update rate	4 ms read															

OFF (0) = Non-inverted
On (1) = Inverted

8.20	**Digital I/O read word**															
Coding	Bit	SP	FI	DE	Txt	VM	DP	ND	RA	NC	NV	PT	US	RW	BU	PS
								1		1		1			1	
Range	0 to 4095															
Update rate	Background write															

This word is used to determine the status of the digital I/O by reading one parameter. The bits in this word reflect the state of Pr **8.01 = {in05, 0.85}** to Pr **8.07, 8.09**, and Pr **8.40** to Pr **8.42.**

Bit	Digital I/O
0	T24 input / output 1
1	T25 input / output 2
2	T26 input / output 3
3	T27 input 4
4	T28 input 5
5	T29 input 6
6	Relay 1
7	
8	Enable
9	Relay 2
10	Start button
11	Forward / Reverse button

8.21	**T24 digital I/O 1 source/destination**															
8.22	**T25 digital I/O 2 source/destination**															
8.23	**T26 digital I/O 3 source/destination**															
8.24	**T27 digital input 4 destination**															
8.25	**T28 digital input 5 destination**															
8.26	**T29 digital input 6 destination**															
Coding	Bit	SP	FI	DE	Txt	VM	DP	ND	RA	NC	NV	PT	US	RW	BU	PS
				1			2					1	1	1	1	
Default	See Table 5-7															
Range	Pr **0.00** to Pr **22.99**															
Update rate	Read on drive reset															

8.27	**Relay / source**															
Coding	Bit	SP	FI	DE	Txt	VM	DP	ND	RA	NC	NV	PT	US	RW	BU	PS
							2					1	1	1	1	
Default	See Table 5-7															
Range	Pr **0.00** to Pr **22.99**															
Update rate	Read on drive reset															

8.29	**I/O polarity select**															
Coding	Bit	SP	FI	DE	Txt	VM	DP	ND	RA	NC	NV	PT	US	RW	BU	PS
	1											1	1	1	1	
Default	1															
Range	2															
Update rate	Background read															

This parameter changes the logic polarity for digital inputs, the digital outputs, and the relay outputs.

	Pr 8.29 = 0 (negative logic inputs and outputs)	**Pr 8.29 = 1 (positive logic inputs and outputs)**	**Pr 8.29 = 2 (positive logic inputs and negative logic outputs)**
Inputs	<5 V = 1 >15 V = 0	<5 V = 0 >15 V = 1	<5 V = 0 >15 V = 1
Non-relay Outputs	On (1) = <5 V OFF (0) = >15 V	On (0) = <5 V OFF (1) = >15 V	On (1) = <5 V OFF (0) = >15 V
Relay outputs	OFF (0) = open On (1) = closed	OFF (0) = open On (1) = closed	OFF (0) = open On (1) = closed

8.30	**Open collector output**															
Coding	Bit	SP	FI	DE	Txt	VM	DP	ND	RA	NC	NV	PT	US	RW	BU	PS
	1												1	1		
Default	0															
Update rate	Background read															

When this parameter = 0 the digital outputs are in push-pull mode.

When this parameter = 1 either the high-side drive (negative logic polarity) or the low-side driver (positive logic polarity) is disabled.

This allows outputs to be connected in a wire-ORed configuration.

8.31	**T24 digital I/O 1 output select**															
8.32	**T25 digital I/O 2 output select**															
8.33	**T26 digital I/O 3 output select**															
Coding	Bit	SP	FI	DE	Txt	VM	DP	ND	RA	NC	NV	PT	US	RW	BU	PS
	1												1	1		
Default	See Table 5-7															
Update rate	Background read															

OFF (0) = Terminal is an input

On (1) = Terminal is an output

8.40	**T61, T62, T63 relay state**															
8.41	**Start button state**															
8.42	**Forward / Reverse button state**															
Coding	Bit	SP	FI	DE	Txt	VM	DP	ND	RA	NC	NV	PT	US	RW	BU	PS
	1							1		1		1				
Default	See Table 5-7															
Update rate	4 ms write															

8.48	**24V input state**															
Coding	Bit	SP	FI	DE	Txt	VM	DP	ND	RA	NC	NV	PT	US	RW	BU	PS
	1							1		1		1				
Update rate	Background write															

When the 24 V input terminal is above 21.6 V, this parameter is 1.

8.50	**T61, T62, T63 relay invert**															
Coding	Bit	SP	FI	DE	Txt	VM	DP	ND	RA	NC	NV	PT	US	RW	BU	PS
	1												1	1		
Default	0															
Update rate	4 ms write															

8.52	**Toggle enable**															
Coding	Bit	SP	FI	DE	Txt	VM	DP	ND	RA	NC	NV	PT	US	RW	BU	PS
	1												1	1		
Default	0															
Update rate	Background read															

When this parameter is 1 the output changes state on each non-active to active change on the key.

8.60	**T61, T62, T63 relay source**															
8.61	**Start button destination**															
8.62	**Forward / Reverse button destination**															
Coding	Bit	SP	FI	DE	Txt	VM	DP	ND	RA	NC	NV	PT	US	RW	BU	PS
							2					1	1	1	1	
Default	See Table 5-7															
Range	Pr **0.00** to Pr **22.99**															
Update rate	Read on drive reset															

5.10 Menu 9: Programmable logic, motorized pot and binary sum

Figure 5-27 Menu 9 logic diagram

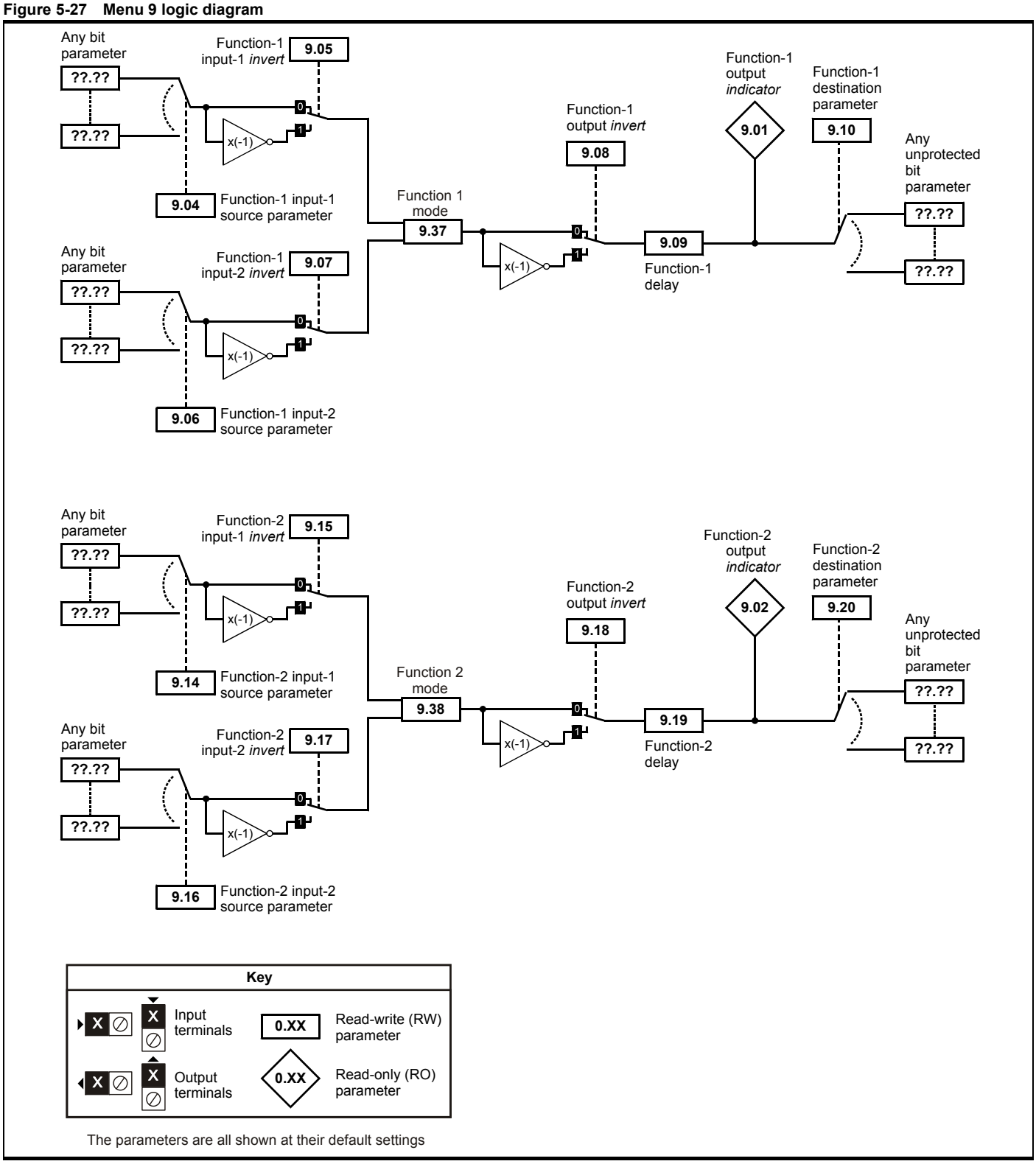

The parameters are all shown at their default settings

Figure 5-28 Menu 9 logic diagram: Motorized pot and binary sum

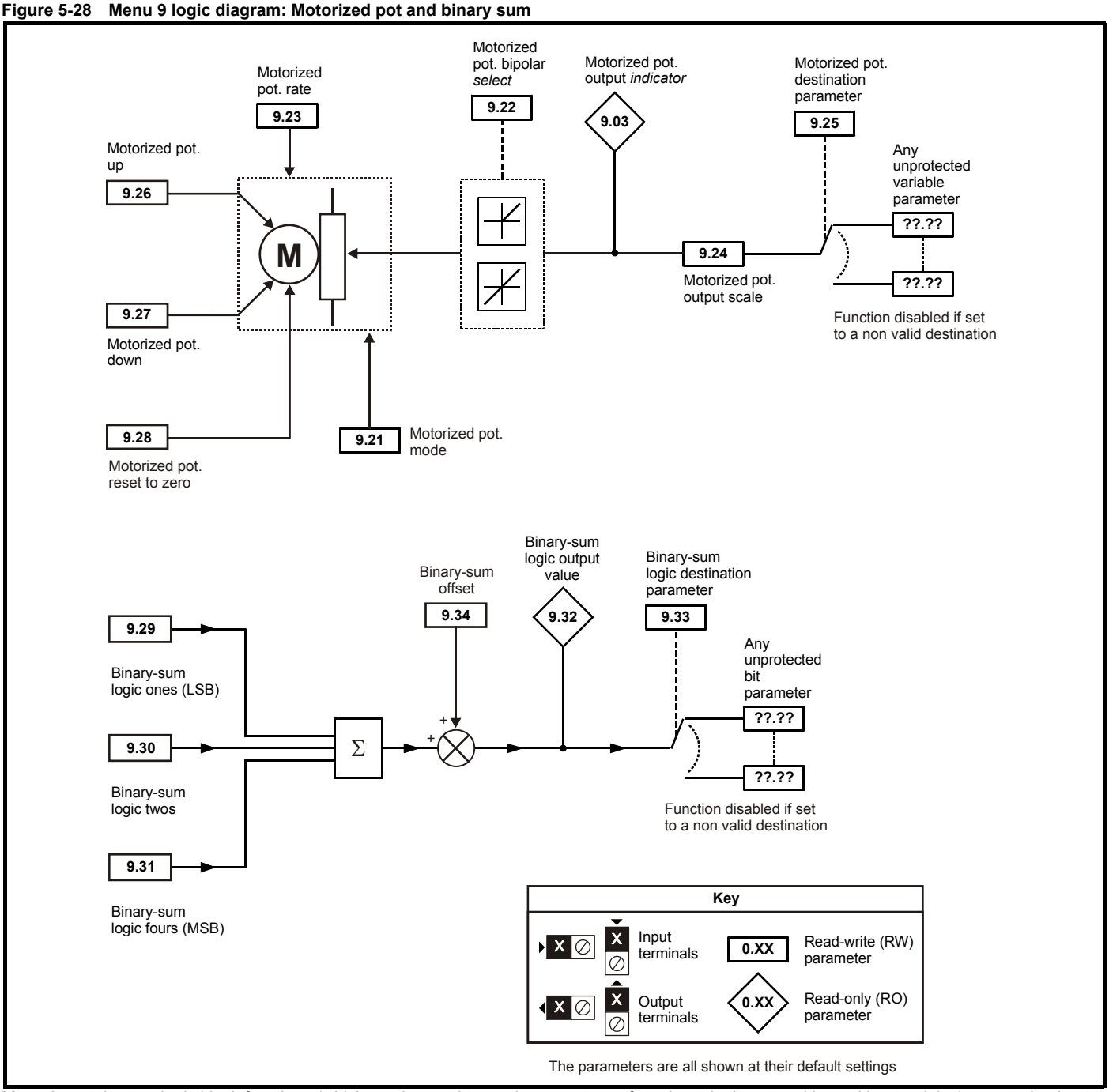

Menu 9 contains two logic block functions (which can be used to produce any type of two input logic gate, with or without a delay), a motorized pot function and a binary sum block. One menu 9 or one menu 12 function is executed every 4 ms. Therefore the sample time of these functions is 4 ms x number of menu 9 and 12 functions active. The logic functions are active if one or both the sources are routed to a valid parameter. The other functions are active if the output destination is routed to a valid unprotected parameter.

9.01	Logic function 1 output															
9.02	Logic function 2 output															
Coding	Bit	SP	FI	DE	Txt	VM	DP	ND	RA	NC	NV	PT	US	RW	BU	PS
	1							1		1		1				
Update rate	4 ms x number of menu 9 or 12 functions active write															

9.03	Motorized pot output															
Coding	Bit	SP	FI	DE	Txt	VM	DP	ND	RA	NC	NV	PT	US	RW	BU	PS
							2	1		1		1				1
Range	±100.00 %															
Update rate	4 ms x number of menu 9 or 12 functions active write															

Indicates the level of the motorized pot prior to scaling. If Pr **9.21** is set to 0 or 2 this parameter is set to 0 at power-up, otherwise it retains its value at the last power-down.

9.04	Logic function 1 source 1															
9.14	Logic function 2 source 1															
Coding	Bit	SP	FI	DE	Txt	VM	DP	ND	RA	NC	NV	PT	US	RW	BU	PS
							2					1	1	1	1	
Range	Pr **0.00** to Pr **22.99**															
Default	Pr **0.00**															
Update rate	Read on reset															

9.05	Logic function 1 source 1 invert															
9.15	Logic function 2 source 1 invert															
Coding	Bit	SP	FI	DE	Txt	VM	DP	ND	RA	NC	NV	PT	US	RW	BU	PS
	1												1	1		
Default	0															
Update rate	4 ms x number of menu 9 or 12 functions active read															

9.06	Logic function 1 source 2															
9.16	Logic function 2 source 2															
Coding	Bit	SP	FI	DE	Txt	VM	DP	ND	RA	NC	NV	PT	US	RW	BU	PS
							2					1	1	1	1	
Range	Pr **0.00** to Pr **22.99**															
Default	Pr **0.00**															
Update rate	Read on reset															

9.07	Logic function 1 source 2 invert															
9.17	Logic function 2 source 2 invert															
Coding	Bit	SP	FI	DE	Txt	VM	DP	ND	RA	NC	NV	PT	US	RW	BU	PS
	1												1	1		
Default	0															
Update rate	4 ms x number of menu 9 or 12 functions active read															

9.08	**Logic function 1 output invert**															
9.18	**Logic function 2 output invert**															
Coding	Bit	SP	FI	DE	Txt	VM	DP	ND	RA	NC	NV	PT	US	RW	BU	PS
	1												1	1		
Default	0															
Update rate	4 ms x number of menu 9 or 12 functions active read															

9.09	**Logic function 1 delay**															
9.19	**Logic function 2 delay**															
Coding	Bit	SP	FI	DE	Txt	VM	DP	ND	RA	NC	NV	PT	US	RW	BU	PS
							1						1	1		
Range	±25.0 s															
Default	0.0															
Update rate	4 ms x number of menu 9 or 12 functions active read															

If the delay parameter is positive, the delay ensures that the output does not become active until an active condition has been present at the input for the delay time as shown below.

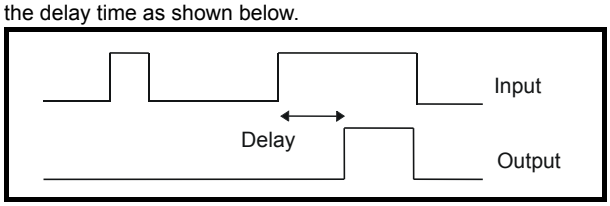

If the delay parameter is negative, the delay holds the output active for the delay period after the active condition has been removed as shown below. Therefore an active input that lasts for 4 ms or more will produce an output that lasts at least as long as the delay time.

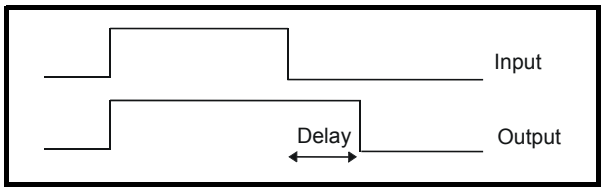

9.10	**Logic function 1 destination**															
9.20	**Logic function 2 destination**															
Coding	Bit	SP	FI	DE	Txt	VM	DP	ND	RA	NC	NV	PT	US	RW	BU	PS
				1			2					1	1	1	1	
Range	Pr **0.00** to Pr **22.99**															
Default	Pr **0.00**															
Update rate	Read on reset															

9.21	**Motorized pot mode**															
Coding	Bit	SP	FI	DE	Txt	VM	DP	ND	RA	NC	NV	PT	US	RW	BU	PS
													1	1	1	
Range	0 to 3															
Default	2															
Update rate	Background read															

The motorized pot modes are given in the following table:

Pr 9.21	Mode	Comments
0	Zero at power-up	Reset to zero at each power-up. Up, down and reset are active at all times.
1	Last value at power-up	Set to value at power-down when drive powered-up. Up, down and reset are active at all times.
2	Zero at power-up and only change when drive running	Reset to zero at each power-up. Up and down are only active when the drive is running (i.e. drive active). Reset is active at all times.
3	Last value at power-up and only change when drive running	Set to value at power-down when drive powered-up. Up and down are only active when the drive is running (i.e. drive active). Reset is active at all times.

9.22	Motorized pot bipolar select															
Coding	Bit	SP	FI	DE	Txt	VM	DP	ND	RA	NC	NV	PT	US	RW	BU	PS
	1												1	1		
Default	0															
Update rate	4 ms x number of menu 9 or 12 functions active read															

When this bit is set to 0 the motorized pot output is limited to positive values only (i.e. 0 to 100.0 %). Setting it to 1 allows negative outputs (i.e. ±100.0 %).

9.23	Motorized pot rate															
Coding	Bit	SP	FI	DE	Txt	VM	DP	ND	RA	NC	NV	PT	US	RW	BU	PS
													1	1	1	
Range	0 to 250 s															
Default	20															
Update rate	Background read															

This parameter defines the time taken for the motorized pot function to ramp from 0 to 100.0 %. Twice this time will be taken to adjust the output from -100.0 % to +100.0 %.

9.24	Motorized pot scale factor															
Coding	Bit	SP	FI	DE	Txt	VM	DP	ND	RA	NC	NV	PT	US	RW	BU	PS
							3						1	1	1	
Range	0.000 to 4.000															
Default	1.000															
Update rate	4 ms x number of menu 9 or 12 functions active read															

This parameter can be used to restrict the output of the motorized pot to operate over a reduced range so that it can be used as a trim, for example.

9.25	Motorized pot destination															
Coding	Bit	SP	FI	DE	Txt	VM	DP	ND	RA	NC	NV	PT	US	RW	BU	PS
				1			2					1	1	1	1	
Range	Pr **0.00** to Pr **22.99**															
Default	Pr **0.00**															
Update rate	Read on reset															

9.26	Motorized pot up															
Coding	Bit	SP	FI	DE	Txt	VM	DP	ND	RA	NC	NV	PT	US	RW	BU	PS
	1									1				1		
Default	0															
Update rate	4 ms x number of menu 9 or 12 functions active read															

9.27	**Motorized pot down**															
Coding	Bit	SP	FI	DE	Txt	VM	DP	ND	RA	NC	NV	PT	US	RW	BU	PS
	1									1				1		
Default	0															
Update rate	4 ms x number of menu 9 or 12 functions active read															

9.28	**Motorized pot reset**															
Coding	Bit	SP	FI	DE	Txt	VM	DP	ND	RA	NC	NV	PT	US	RW	BU	PS
	1									1				1		
Default	0															
Update rate	4 ms x number of menu 9 or 12 functions active read															

These three bits control the motorized pot. The up and down inputs increase and decrease the output at the programmed rate respectively. If both up and down are active together the up function dominates and the output increases. If the reset input is one, the motorized pot output is reset and held at 0.0 %.

9.29	**Binary sum ones input**															
Coding	Bit	SP	FI	DE	Txt	VM	DP	ND	RA	NC	NV	PT	US	RW	BU	PS
	1									1				1		
Default	0															
Update rate	4 ms x number of menu 9 or 12 functions active read															

9.30	**Binary sum twos input**															
Coding	Bit	SP	FI	DE	Txt	VM	DP	ND	RA	NC	NV	PT	US	RW	BU	PS
	1									1				1		
Default	0															
Update rate	4 ms x number of menu 9 or 12 functions active read															

9.31	**Binary sum fours input**															
Coding	Bit	SP	FI	DE	Txt	VM	DP	ND	RA	NC	NV	PT	US	RW	BU	PS
	1									1				1		
Default	0															
Update rate	4 ms x number of menu 9 or 12 functions active read															

9.32	**Binary sum output**															
Coding	Bit	SP	FI	DE	Txt	VM	DP	ND	RA	NC	NV	PT	US	RW	BU	PS
								1		1		1			1	
Range	0 to 255															
Default	0															
Update rate	4 ms x number of menu 9 or 12 functions active write															

9.33	**Binary sum destination**															
Coding	Bit	SP	FI	DE	Txt	VM	DP	ND	RA	NC	NV	PT	US	RW	BU	PS
				1			2					1	1	1	1	
Range	Pr **0.00** to Pr **22.99**															
Default	Pr **0.00**															
Update rate	Read on reset															

9.34	Binary sum offset															
Coding	Bit	SP	FI	DE	Txt	VM	DP	ND	RA	NC	NV	PT	US	RW	BU	PS
				1			2					1	1	1	1	
Range	0 to 248															
Default	0															
Update rate	4 ms read															

The binary sum output is given by:

Offset + ones input + (2 x twos input) + (4 x fours input)

The value written to the destination parameter is defined as follows:

If destination parameter maximum ≤ (7 + Offset):
Destination parameter = Binary sum output

If destination parameter maximum > (7 + Offset):
Destination parameter = Destination parameter maximum x Binary sum output / (7 + Offset)

9.35	Up down disable source															
Coding	Bit	SP	FI	DE	Txt	VM	DP	ND	RA	NC	NV	PT	US	RW	BU	PS
							2					1	1	1	1	
Range	Pr **0.00** to Pr **22.99**															
Default	Pr **0.00**															
Update rate	Read on reset															

This parameter allows up and down buttons to be disabled under a defined condition, e.g. when the drive is in current limit.

9.36	Up down disable invert															
Coding	Bit	SP	FI	DE	Txt	VM	DP	ND	RA	NC	NV	PT	US	RW	BU	PS
	1												1	1		
Default	0															
Update rate	4 ms read															

When this is set to 1, the condition to disable the up and down buttons is inverted.

9.37	Logic block 1 mode															
9.38	Logic block 2 mode															
Coding	Bit	SP	FI	DE	Txt	VM	DP	ND	RA	NC	NV	PT	US	RW	BU	PS
													1	1	1	
Range	0 to 4															
Default	0															
Update rate	4 ms read															

Mode value	Action	Result
0	AND	Output = input1 AND input2
1	OR	Output = input1 OR input2
2	XOr	Output = input1 XOR input2
3	RS flip flop	Input1 – set input2 – reset
4	D type flip flop	Input1 – data input2 - clock

AND
The output is the logic AND of the 2 inputs.

OR
The output is the logic OR of the 2 inputs.

Exclusive OR
The output is the exclusive OR of the 2 inputs.

RS flip flop

Reset (source 2)	**Set (source 1)**	**Output**
1	0	0
0	1	1
0	0	No change

D-type flip-flop

Clock (source 2)	**Data (source 1)**	**Output**
0	X	No change
0->1	0	0
0->1	1	1
1	X	No change
1->0	X	No change

5.11 Menu 10: Status and trips

10.01	Drive OK															
Coding	Bit	SP	FI	DE	Txt	VM	DP	ND	RA	NC	NV	PT	US	RW	BU	PS
	1							1		1		1				
Update rate	Background write															

Indicates the drive is not in the trip state. If Pr **10.36** is one and auto-reset is being used, this bit is not cleared until all auto-resets have been attempted and the next trip occurs. The control board LED reflects the state of this parameter: LED on continuously = 1, LED flashing = 0.

10.02	Drive active															
Coding	Bit	SP	FI	DE	Txt	VM	DP	ND	RA	NC	NV	PT	US	RW	BU	PS
	1							1		1		1				
Update rate	4 ms write															

Indicates that the armature is active.

10.03	Zero speed															
Coding	Bit	SP	FI	DE	Txt	VM	DP	ND	RA	NC	NV	PT	US	RW	BU	PS
	1							1		1		1				
Update rate	Background write															

Indicates that the absolute value of speed feedback (Pr **3.02 = {di05, 0.40}**) is at or below the zero speed threshold defined by Pr **3.05**.

10.04	Running at or below min speed															
Coding	Bit	SP	FI	DE	Txt	VM	DP	ND	RA	NC	NV	PT	US	RW	BU	PS
	1							1		1		1				
Update rate	Background write															

In bipolar mode (Pr **1.10** = 1) this parameter is the same as zero speed (Pr **10.03**). In unipolar mode this parameter is set if the absolute value of the speed feedback (Pr **3.02 = {di05, 0.40}**) is at or below (minimum speed + 5 rpm). Minimum speed is defined by (Pr **1.07 = {SE01, 0.22}**). The parameter is only set if the drive is running.

10.05	Below set speed															
Coding	Bit	SP	FI	DE	Txt	VM	DP	ND	RA	NC	NV	PT	US	RW	BU	PS
	1							1		1		1				
Update rate	Background write															

10.06	At speed															
Coding	Bit	SP	FI	DE	Txt	VM	DP	ND	RA	NC	NV	PT	US	RW	BU	PS
	1							1		1		1				
Update rate	Background write															

10.07	Above set speed															
Coding	Bit	SP	FI	DE	Txt	VM	DP	ND	RA	NC	NV	PT	US	RW	BU	PS
	1							1		1		1				
Update rate	Background write															

The speed detector in menu 3 sets these flags. (See Pr **3.06**, Pr **3.07** and Pr **3.09**).

10.08	Load reached															
Coding	Bit	SP	FI	DE	Txt	VM	DP	ND	RA	NC	NV	PT	US	RW	BU	PS
	1							1		1		1				
Update rate	Background write															

Indicates that the absolute value of the active current is greater or equal to the rated motor current as defined in menu 5.

10.09	**Drive output is at current limit**															
Coding	Bit	SP	FI	DE	Txt	VM	DP	ND	RA	NC	NV	PT	US	RW	BU	PS
	1							1		1		1				
Update rate	4 ms write															

Indicates that the current limits are active.

10.10	**Regenerating**															
Coding	Bit	SP	FI	DE	Txt	VM	DP	ND	RA	NC	NV	PT	US	RW	BU	PS
	1							1		1		1				
Update rate	4 ms write															

Indicates that power is being transferred from the motor to the supply.

10.13	**Direction commanded**															
Coding	Bit	SP	FI	DE	Txt	VM	DP	ND	RA	NC	NV	PT	US	RW	BU	PS
	1							1		1		1				
Update rate	Background write															

This parameter is one if the pre-ramp reference (Pr **1.03 = {di02, 0.37}**) is negative, and zero if the pre-ramp reference is zero or positive.

10.14	**Direction running**															
Coding	Bit	SP	FI	DE	Txt	VM	DP	ND	RA	NC	NV	PT	US	RW	BU	PS
	1							1		1		1				
Update rate	Background write															

This parameter is one if the speed feedback (Pr **3.02 = {di05, 0.40}**) is negative, or zero if the speed feedback is zero or positive.

10.17	**Overload alarm**															
Coding	Bit	SP	FI	DE	Txt	VM	DP	ND	RA	NC	NV	PT	US	RW	BU	PS
	1							1		1		1				
Update rate	Background write															

This parameter is set if the drive output current is larger than 105 % of rated current (Pr **5.07 = {SE07, 0.28}**) and the overload accumulator is greater than 75 % to warn that if the motor current is not reduced the drive will trip on an Ixt overload. (If the rated current (Pr **5.07 = {SE07, 0.28}**) is set to a level above the rated drive current (Pr **11.32**) the overload alarm is given when the current is higher than 100 % of rated current.)

10.18	**Drive over temperature alarm**															
Coding	Bit	SP	FI	DE	Txt	VM	DP	ND	RA	NC	NV	PT	US	RW	BU	PS
	1							1		1		1				
Update rate	Background write															

Indicates that the heat sink temperature Pr **7.04** is above the alarm level.

10.19	**Drive warning**															
Coding	Bit	SP	FI	DE	Txt	VM	DP	ND	RA	NC	NV	PT	US	RW	BU	PS
	1							1		1		1				
Update rate	Background write															

Indicates that one of the drive alarms is active, i.e. Pr **10.19** = Pr **10.17** OR Pr **10.18**.

10.20 {tr01, 0.51}	**Trip 0**															
10.21 {tr02, 0.52}	**Trip 1**															
10.22 {tr03, 0.53}	**Trip 2**															
10.23 {tr04, 0.54}	**Trip 3**															
10.24 {tr05, 0.55}	**Trip 4**															
10.25 {tr06, 0.56}	**Trip 5**															
10.26 {tr07, 0.57}	**Trip 6**															
10.27 {tr08, 0.58}	**Trip 7**															
10.28 {tr09, 0.59}	**Trip 8**															
10.29 {tr10, 0.60}	**Trip 9**															
Coding	Bit	SP	FI	DE	Txt	VM	DP	ND	RA	NC	NV	PT	US	RW	BU	PS
					1			1		1		1			1	1
Range	0 to 229															
Update rate	Background write															

Contains the last 10 drive trips. (Pr **10.20 = {tr01, 0.51}**) is the most recent trip and (Pr **10.29 = {tr10, 0.60}**) the oldest. When a new trip occurs all the parameters move down one, the current trip is put in (Pr **10.20 = {tr01, 0.51}**) and the oldest trip is lost from the bottom of the log. Descriptions of the trips are given in Table 5-8 below. All trips are stored, including HF trips numbered from 20 to 29. (HF trips with numbers from 1 to 16 are not stored in the trip log.) Any trip can be initiated by the actions described, or by writing the relevant trip number to Pr **10.38**. If any trips shown as user trips are initiated, the trip string is "txxx", where xxx is the trip number.

Table 5-8 Trip indications

Trip	Diagnosis
AOC	**Instantaneous output over current detected: Peak current greater than 225 %**
3	Check for short circuit on armature cabling Check integrity of motor insulation Check current loop stability
AOP	**Voltage has been applied to the armature but no current feedback has been detected**
158	Check the armature circuit
AtL.Err	**Power processor armature timing loop cannot operate with the current PLL synchronisation and the firing angle demand**
161	This can occur if the PLL is in the process of losing synchronization but has not yet asserted a PLL Err (trip 174).
C.Acc	**SMARTCARD trip: SMARTCARD Read / Write fail**
185	Check SMARTCARD is installed / located correctly Ensure SMARTCARD is not writing data to data location 500 to 999 Replace SMARTCARD
C.boot	**SMARTCARD trip: The menu 0 parameter modification cannot be saved to the SMARTCARD because the necessary file has not been created on the SMARTCARD**
177	A write to a menu 0 parameter has been initiated via the keypad with Pr **11.42** (**SE09, 0.30**) set to auto(3) or boot(4), but the necessary file on the SMARTCARD has not been created. Ensure that Pr **11.42** (**SE09, 0.30**) is correctly set and reset the drive to create the necessary file on the SMARTCARD Re-attempt the parameter write to the menu 0 parameter
C.bUSY	**SMARTCARD trip: SMARTCARD can not perform the required function as it is being accessed by a Solutions Module**
178	Wait for the Solutions Module to finish accessing the SMARTCARD and then re-attempt the required function

Trip	Diagnosis
C.Chg	**SMARTCARD trip: Data location already contains data**
179	Erase data in data location Write data to an alternative data location
C.cPr	**SMARTCARD trip: The values stored in the drive and the values in the data block on the SMARTCARD are different**
188	Press the red reset button
C.dAt	**SMARTCARD trip: Data location specified does not contain any data**
183	Ensure data block number is correct
C.Err	**SMARTCARD trip: SMARTCARD data is corrupted**
182	Ensure the card is located correctly Erase data and retry Replace SMARTCARD
C.Full	**SMARTCARD trip: SMARTCARD full**
184	Delete a data block or use different SMARTCARD
cL2	**Analog input 2 current loss (current mode)**
28	Check analog input 2 (terminal 7) current signal is present (4-20 mA, 20-4 mA)
cL3	**Analog input 3 current loss (current mode)**
29	Check analog input 3 (terminal 8) current signal is present (4-20 mA, 20-4 mA)
CL.bit	**Trip initiated from the control word (Pr 6.42)**
35	Disable the control word by setting Pr **6.43** to 0 or check setting of Pr **6.42**
C.OPtn	**SMARTCARD trip: Solutions Modules installed are different between source drive and destination drive**
180	Ensure correct Solutions Modules are installed Ensure Solutions Modules are in the same Solutions Module slot Press the red reset button
C.Prod	**SMARTCARD trip: The data blocks on the SMARTCARD are not compatible with this product**
175	Erase all data on the SMARTCARD by setting Pr **xx.00** to 9999 and pressing the red reset button Replace SMARTCARD
C.rdo	**SMARTCARD trip: SMARTCARD has the Read Only bit set**
181	Enter 9777 in Pr **xx.00** to allow SMARTCARD Read / Write access Ensure the drive is not writing to data locations 500 to 999 on the card
C.rtg	**SMARTCARD trip: The voltage and/or current rating of the source and destination drives are different**
186	Parameter data or default difference data is being transferred from a SMART card to the drive, but the current and /or voltage ratings are different between source and destination drives. This trip does not stop the data transfer, but is a warning that the data for the Solution Modules that are different will be set to the default values and not the values from the card. This trip also applies if a compare is attempted between the data block and the drive.
C.TyP	**SMARTCARD trip: SMARTCARD parameter set not compatible with drive**
187	Press the reset button Ensure destination drive type is the same as the source parameter file drive type
dESt	**Two or more parameters are writing to the same destination parameter**
199	Set Pr **xx.00** = 12001 check all visible parameters in the menus for duplication
EEF	**EEPROM data corrupted - Drive mode becomes open loop and serial comms will timeout with remote keypad on the drive RS485 comms port.**
31	This trip can only be cleared by loading default parameters and saving parameters
EnC1	**Drive encoder trip: Encoder power supply overload**
189	Check encoder power supply wiring and encoder current requirement Maximum current = 200 mA @ 15 V, or 300 mA @ 8 V and 5 V
EnC2	**Drive encoder trip: Wire break**
190	Check cable continuity Check wiring of feedback signals is correct Check encoder power supply is set correctly in Pr **3.36** (**Fb06, 0.76**) Replace feedback device If wire break detection on the main drive encoder input is not required, set Pr **3.40** = 0 to disable the Enc2 trip
EnC3	**Drive encoder trip: Overload**
191	Overload

Trip	Diagnosis
EnC9	**Drive encoder trip: Position feedback is selected from a Solutions Module slot which does not have a speed / position feedback Solutions Module installed**
197	Check setting of Pr **3.26** (**Fb01, 0.71**) (or Pr **21.21** if the second motor parameters have been enabled)
EnC10	**Drive encoder trip: Termination overload**
198	If the voltage from the encoder is >5 V, then the termination resistors must be disabled (Pr **3.39** to 0)
Et	**External trip**
6	Check terminal 31 signal Check value of Pr **10.32** Enter 12001 in Pr **xx.00** and check for parameter controlling Pr **10.32** Ensure Pr **10.32** or Pr **10.38** (=6) are not being controlled by serial comms
FbL	**No feedback from the tachometer or encoder**
159	If the difference between the estimated speed (Pr **5.04**) and the actual speed feedback (Pr **3.02** (**di05, 0.40**)) exceeds the value set in the speed feedback loss window (Pr **3.56**) the drive will trip Feedback loss. With fast acceleration rates in applications with low load intertia estimated speed (Pr **5.04**) may not track the actual speed feedback (Pr **3.02** (**di05**, **0.40**)) fast enough and the speed feedback loss window (Pr **3.56**) may need to be increased. Check the feedback device is connected correctly Check motor name plate values have been entered into the drive correctly Check the speed feedback in estimated speed mode - refer to running a motor section checking speed feedback Carry out a rotating autotune
Fbr	**The polarity of the feedback tachometer or encoder is incorrect**
160	Check that the feedback devices are connected correctly
FdL	**No current in the field supply circuit**
168	Check that the field controller (Pr **5.77** (**SE12, 0.33**)) is enabled. For the internal field controller check terminals L11, L12 are closed Check internal auxiliary fuses.
FOC	**Excess current detected in field current feedback**
169	Maximum current feedback is present Check Field rated current (Pr **5.70** (**SE10, 0.31**)) and Field rated voltage (Pr **5.73** (**SE11, 0.32**)) are set correct to motor nameplate Check for short circuit on field circuit cabling Check integrity of motor insulation
F.OVL	**Field I^2t overload**
157	See Pr **5.81** and Pr **5.82**
HF01	**Data processing error: CPU address error**
	Hardware fault - return drive to supplier
HF02	**Data processing error: DMAC address error**
	Hardware fault - return drive to supplier
HF03	**Data processing error: Illegal instruction**
	Hardware fault - return drive to supplier
HF04	**Data processing error: Illegal slot instruction**
	Hardware fault - return drive to supplier
HF05	**Data processing error: Undefined exception**
	Hardware fault - return drive to supplier
HF06	**Data processing error: Reserved exception**
	Hardware fault - return drive to supplier
HF07	**Data processing error: Watchdog failure**
	Hardware fault - return drive to supplier
HF08	**Data processing error: Level 4 crash**
	Hardware fault - return drive to supplier
HF09	**Data processing error: Heap overflow**
	Hardware fault - return drive to supplier
HF10	**Data processing error: Router error**
	Hardware fault - return drive to supplier

Trip	Diagnosis
HF11	**Data processing error: Access to EEPROM failed**
	Hardware fault - return drive to supplier
HF12	**Data processing error: Main program stack overflow**
	Hardware fault - return drive to supplier
HF17	**Data processing error: No Comms from power processor**
217	Hardware fault - return drive to supplier
HF18	**Bucket suppressor capacitor failure**
218	Hardware fault - return drive to supplier
HF19	**Overheat on bucket suppressor or snubber circuits**
219	Check internal fan operation
HF20	**Power stage recognition: identification code error**
220	Hardware fault - return drive to supplier
HF21	**Power processor: Watchdog failure**
221	Hardware fault - return drive to supplier
HF22	**Power processor: Undefined exception**
222	Hardware fault - return drive to supplier
HF23	**Power processor: Level overrun**
223	Hardware fault - return drive to supplier
HF27	**Power circuit: Thermistor 1 fault**
227	Hardware fault - return drive to supplier
HF28	**Power software not compatible with user software**
228	Hardware fault - return drive to supplier
HF29	**User processor: Armature timing error**
229	Hardware fault - return drive to supplier
It.AC	**I^2t on drive output current (Refer to Pr 4.16)**
20	Ensure the load is not jammed / sticking Check the load on the motor has not changed
O.ht1	**Drive overheat (SCR junction) based on thermal model**
21	Reduce ambient temperature Reduce overload cycle
O.ht2	**Heatsink over temperature**
22	Check enclosure / drive fans are still functioning correctly Check enclosure ventilation paths Check enclosure door filters Increase ventilation Decrease acceleration / deceleration rates Reduce duty cycle Reduce motor load
O.ht3	**External discharge resistor over temperature**
27	The temperature of the external discharge resistor is monitored by the temperature accumulators. When the resistor temperature (Pr **11.65**) reaches 100 % the drive will trip See Pr **11.62**, Pr **11.63** and Pr **11.64**
O.Ld1	**Digital output overload: total current drawn from 24 V supply and digital outputs exceeds 200 mA**
26	Check total load on digital outputs (terminals 24, 25 and 26)and +24 V rail (terminal 22)
O.SPd	**Motor speed has exceeded the over speed threshold**
7	The drive will trip O.SPd if the armature is open circuit when the drive is in estimated speed mode. Check armature circuit If the speed feedback (Pr **3.02** (**di05, 0.40**)) exceeds the over speed threshold (Pr **3.08**) in either direction an over speed trip is produced. If this parameter is set to zero, the over speed threshold is automatically set to 1.2 x Pr **1.06** (**SE02, 0.23**) or Pr **1.07** (**SE01, 0.22**). Reduce the speed loop gain (Pr **3.10** (**SP01, 0.61**)) and speed integral (Pr **3.11** (**SP02, 0.62**)) to prevent speed overshoot.

Trip	Diagnosis
PAd	**Keypad has been removed when the drive is receiving the speed reference from the keypad**
34	Install keypad and reset Change speed reference selector to select speed reference from another source
PLL Err	**Phase Lock Loop cannot lock to the auxiliary supply**
174	Check auxiliary supply is stable
PS	**Internal power supply fault**
5	Remove any Solutions Modules and reset Hardware fault - return drive to supplier
PS.10V	**10 V user power supply current greater than 10 mA**
8	Check wiring to terminal 4 Reduce load on terminal 4
PS.24V	**24 V internal power supply overload**
9	The total user load of the drive and Solutions Modules has exceeded the internal 24 V power supply limit. The user load consists of the drive's digital outputs, the SM-I/O Plus digital outputs, the drive's main encoder supply and the SM-Universal Encoder Plus encoder supply. • Reduce load and reset • Provide an external 24 V >50 W power supply • Remove any Solutions Modules and reset
PSAVE.Er	**Power down save parameters in the EEPROM are corrupt**
37	Indicates that the power was removed when power down save parameters were being saved. The drive will revert back to the power down parameter set that was last saved successfully. Perform a user save (Pr **xx.00** to SAVE and reset the drive) or power down the drive normally to ensure this trip does or occur the next time the drive is powered up.
SAVE.Er	**User save parameters in the EEPROM are corrupt**
36	Indicates that the power was removed when user parameters were being saved. The drive will revert back to the user parameter set that was last saved successfully. Perform a user save (Pr **xx.00** to SAVE and reset the drive) to ensure this trip does or occur the next time the drive is powered up.
SCL	**Drive RS485 serial comms loss to remote keypad**
30	Reinstall the cable between the drive and keypad Check cable for damage Replace cable Replace keypad
SL	**AC input phase loss**
170	Ensure all three SCR bridge supply phases are present Check input voltage levels are correct (at full load)
SLX.dF	**Solutions Module slot X trip: Solutions Module type installed in slot X changed**
204,209,214	Save parameters and reset
SLX.Er	**Solutions Module slot X trip: Solutions Module in slot X has detected a fault**
202,207,212	**Feedback module category** See the *Diagnostics* section in the relevant Solutions Module User Guide for more information.
SLX.HF	**Solutions Module slot X trip: Solutions Module X hardware fault**
200,205,210	Ensure Solutions Module is installed correctly Return Solutions Module to supplier
SLX.nF	**Solutions Module slot X trip: Solutions Module has been removed**
203,208,213	Ensure Solutions Module is installed correctly Reinstall Solutions Module Save parameters and reset drive
SL.rtd	**Solutions Module trip: Drive mode has changed and Solutions Module parameter routing is now incorrect**
215	Press reset. If the trip persists, contact the supplier of the drive.
SLX.tO	**Solutions Module slot X trip: Solutions Module watchdog timeout**
201,206,211	Press reset. If the trip persists, contact the supplier of the drive.
S.Old	**The maximum power the over voltage suppressor can handle has been exceeded**
171	Check the recommended line reactors are installed Check the recommended external suppressor resistor is installed

Trip	Diagnosis
S.OV	**Excessive suppressor voltage**
172	Operation of the drive requires the installation of the external suppressor resistance, see *Section 4.7 External suppressor resistor in the Mentor MP User Guide.*
t002	**Reserved**
2	A value of 2 is being written to user trip (Pr **10.38**). The drives internal logic, on board or Solutions Module program must be interrogated. The program should be modified so that only trips defined as User trip are used.
t004	**Reserved**
4	See diagnosis for t002
t010	**Reserved**
10	See diagnosis for t002
t019	**Reserved**
19	See diagnosis for t002
t023	**User trip**
23	This trip is user defined. The drives internal logic, on board or Solutions module program must be interrogated to find the cause of this trip. A value of 23 is being written to user trip (Pr **10.38**)
t032	**Reserved**
32	See diagnosis for t002
t032 to t033	**Reserved**
32 to 33	See diagnosis for t002
t038 to t039	**Reserved**
38 to 39	See diagnosis for t002
t040 to t089	**User trip**
40 to 89	See diagnosis for t023
t099	**User trip defined in 2nd processor Solutions Module code**
99	This solutions module program must be interrogated to find the cause of this trip. A value of 99 is being written to user trip (Pr **10.38**)
t101	**User trip**
101	See diagnosis for t023
t102 to t111	**Reserved**
102 to 111	See diagnosis for t002
t112 to t156	**User trip**
112 to 156	See diagnosis for t023
t161 to t167	**Reserved**
161 to 167	See diagnosis for t002
t176	**Reserved**
176	See diagnosis for t002
t192 to t196	**Reserved**
192 to 196	See diagnosis for t002
t216	**User trip**
216	See diagnosis for t023
th	**Motor thermistor trip**
24	Check motor temperature Check thermistor continuity Set Pr **7.15** (**in01, 0.81**) = VOLt and reset the drive to disable this function
th.Err	**Missing thyristor**
173	Hardware fault - return drive to supplier
thS	**Motor thermistor short circuit**
25	Check motor thermistor wiring Replace motor / motor thermistor Set Pr **7.15** (**in01, 0.81**) = VOLt and reset the drive to disable this function

Trip	Diagnosis
tunE	**Autotune stopped before completion**
18	The drive has tripped out during the autotune The red stop key has been pressed during the autotune
tunE1*	**The position feedback did not change or required speed could not be reached during the inertia test (see Pr 5.12 (SE13, 0.34))**
11	Ensure the motor is free to turn i.e. brake was released Ensure Pr **3.26** and Pr **3.38** are set correctly Check feedback device wiring is correct Check feedback device coupling to motor
tunE2*	**Position feedback direction incorrect or motor could not be stopped during the inertia test (See Pr 5.12 (SE13, 0.34))**
12	Check motor cable wiring is correct Check feedback device wiring is correct
tunE3*	**Field flux has not decayed to zero during autotune**
13	Contact the supplier of the drive
tunE4*	**Back emf detected during autotune**
14	Check that the motor is not spinning when a static autotune is carried out
tunE5*	**No field current detected during autotune**
15	Reset Pr **5.70** (**SE10, 0.31**) to nameplate value and re-autotune motor
tunE6*	**Cannot achieve ¼ rated back emf during autotune**
16	Reset Pr **5.70** (**SE10, 0.31**) to nameplate value and re-autotune motor
tunE7*	**Rotating autotune initiated with Estimated speed selected**
17	Connect a feedback device to carry out a rotating autotune
UP ACC	**Onboard PLC program: cannot access Onboard PLC program file on drive**
98	Disable drive - write access is not allowed when the drive is enabled Another source is already accessing Onboard PLC program - retry once other action is complete
UP div0	**Onboard PLC program attempted divide by zero**
90	Check program
UP OFL	**Onboard PLC program variables and function block calls using more than the allowed RAM space (stack overflow)**
95	Check program
UP ovr	**Onboard PLC program attempted out of range parameter write**
94	Check program
UP PAr	**Onboard PLC program attempted access to a non-existent parameter**
91	Check program
UP ro	**Onboard PLC program attempted write to a read-only parameter**
92	Check program
UP So	**Onboard PLC program attempted read of a write-only parameter**
93	Check program
UP udF	**Onboard PLC program un-defined trip**
97	Check program
UP uSEr	**Onboard PLC program requested a trip**
96	Check program
UV	**The drive is running from the external 24 V supply**
1	The drive is running from the external 24 V supply

* If a tunE through tunE 7 trip occurs, then after the drive is reset the drive cannot be made to run unless it is disabled via the drive enable parameter (Pr **6.15**) or the control word (Pr **6.42**).

Table 5-9 Serial communications look-up table

No.	String	No.	String	No.	String
1	UV	92	UP ro	189	EnC1
2	t002	93	UP So	190	EnC2
3	AOC	94	UP ovr	191	EnC3
4	t004	95	UP OFL	192-196	t192 - t196
5	PS	96	UP uSEr	197	EnC9
6	Et	97	UP udf	198	EnC10
7	O.SPd	98	UP ACC	199	dESt
8	PS.10V	99	t099	200	SL1.HF
9	PS.24V	100		201	SL1.tO
10	t010	101	t101	202	SL1.Er
11	tunE1	102-111	t102 - t111	203	SL1.nF
12	tunE2	112-155	t112 - t155	204	SL1.dF
13	tunE3	156	SLAVE.Er	205	SL2.HF
14	tunE4	157	F.OVL	206	SL2.tO
15	tunE5	158	AOP	207	SL2.Er
16	tunE6	159	FbL	208	SL2.nF
17	tunE7	160	Fbr	209	SL2.dF
18	tunE	161	AtL.Err	210	SL3.HF
19	t019	162-167	t162 - t167	211	SL3.tO
20	It.AC	168	FdL	212	SL3.Er
21	O.ht1	169	FOC	213	SL3.nF
22	O.ht2	170	SL	214	SL3.dF
23	t023	171	S.OLd	215	SL.rtd
24	th	172	S.OV	216	t216
25	thS	173	th.Err	217-229	HF17 – HF29
26	O.Ld1	174	PLL Err		
27	O.ht3	175	C.Prod		
28	cL2	176	t176		
29	cL3	177	C.Boot		
30	SCL	178	C.BUSy		
31	EEF	179	C.Chg		
32-33	t032 - t033	180	C.Optn		
34	Pad	181	C.RdO		
35	CL.bit	182	C.Err		
36	SAVE.Er	183	C.dat		
37	PSAVE.Er	184	C.FULL		
38-39	t038 - t039	185	C.Acc		
40-89	t040 - t089	186	C.rtg		
90	UP div0	187	C.Typ		
91	UP Par	188	C.cpr		

Trip Categories

Trips can be grouped into the following categories. It should be noted that a trip can only occur when the drive is not tripped or is already tripped but with a trip with a lower priority number.

Priority	Category	Trips	Comments
1	Hardware faults	HF01 to HF16	These indicate fatal problems and cannot be reset. The drive is inactive after one of these trips and the display shows HFxx
2	Non-resetable trips	HF17 to HF29, SL1.HF, SL2.HF, SL3.HF	Cannot be reset
3	EEF trip	EEF	Cannot be reset unless a code to load defaults is first entered in Pr **x.00**
4	SMARTCARD trips	C.Boot, C.Busy, C.Chg, C.Optn, C.RdO, C.Err, C.dat, C.FULL, C.Acc, C.rtg, C.Typ, C.cpr	SMARTCARD trips have priority 5 during power up
4	Encoder power supply trips	Enc1, Enc3	These trips can only override the following priority 5 trips: Enc2, Enc9 or Enc10
5	Normal trips	All other trips not included in this table	
6	Self resetting trips	UV	Under voltage trip cannot be reset by the user, but is automatically reset by the drive when the supply voltage is within specification. Trip not saved to EEProm

Unless otherwise stated, trips cannot be reset until 1.0 s after the trip has been accepted by the drive.

Hardware fault trips

HF fault code	Reason for trip
01	CPU address error
02	DMAC address error
03	Illegal instruction
04	Illegal slot instruction
05	Undefined exception
06	Reserved exception
07	Watchdog failure
08	Level 4 crash
09	Heap overflow
10	Router error
11	Access to the EEPROM failed or incorrect EEPROMs installed
12	Main program stack overflow
13 - 16	Not used
17	No comms from power processor
18	Bucket suppressor capacitor failure
19	Over heat on bucket suppressor or snubber circuits. Check internal fan operation
20	Power circuit - identification code error
21	Power processor - Watchdog failure
22	Power processor - Undefined exception
23	Power processor - Level overrun
24	Power processor - Spare
25	Power processor - Spare
26	Power processor - Spare
27	Power circuit thermistor 1 fault
28	Power software not compatible with user software
29	User processor - Armature timing error

10.32	**External trip**															
Coding	Bit	SP	FI	DE	Txt	VM	DP	ND	RA	NC	NV	PT	US	RW	BU	PS
	1									1				1		
Default	0															
Update rate	Background read															

If this flag is set to one then the drive will trip (Et). If an external trip function is required, a digital input should be programmed to control this bit.

10.33	**Drive reset**															
Coding	Bit	SP	FI	DE	Txt	VM	DP	ND	RA	NC	NV	PT	US	RW	BU	PS
	1									1				1		
Default	0															
Update rate	Background read															

A zero to one change in this parameter will cause a drive reset. If a drive reset terminal is required on the drive the required terminal must be programmed to control this bit.

10.34	**No. of auto-reset attempts**															
Coding	Bit	SP	FI	DE	Txt	VM	DP	ND	RA	NC	NV	PT	US	RW	BU	PS
													1	1	1	
Range	0 to 5															
Default	0															
Update rate	Background read															

See also Pr **10.35** overleaf

10.35	**Auto-reset delay**															
Coding	Bit	SP	FI	DE	Txt	VM	DP	ND	RA	NC	NV	PT	US	RW	BU	PS
							1						1	1	1	
Range	0.0 to 25.0 s															
Default	1.0															
Update rate	Background read															

If Pr **10.34** is set to zero then no auto reset attempts are made. Any other value will cause the drive to automatically reset following a trip for the number of times programmed. Pr **10.35** defines the time between the trip and the auto reset. The reset count is only incremented when the trip is the same as the previous trip, otherwise it is reset to 0. When the reset count reaches the programmed value, any further trip of the same value will not cause an auto-reset. If there has been no trip for 5 minutes then the reset count is cleared. Auto reset will not occur on Et, EEF or HFxx trips. When a manual reset occurs the auto reset counter is reset to zero.

10.36	**Hold drive OK until last attempt**															
Coding	Bit	SP	FI	DE	Txt	VM	DP	ND	RA	NC	NV	PT	US	RW	BU	PS
	1												1	1		
Default	0															
Update rate	Background read															

If this parameter is 0 then Pr **10.01** (Drive OK is cleared every time the drive trips regardless of any auto-reset that may occur. When this parameter is set the 'Drive OK' indication is not cleared on a trip if an auto-reset is going to occur.

10.38	**User trip**															
Coding	Bit	SP	FI	DE	Txt	VM	DP	ND	RA	NC	NV	PT	US	RW	BU	PS
													1	1	1	
Range	0 to 255															
Default	0															
Update rate	Background read															

When a value other than zero is written to the user trip parameter the actions described in the following table are performed. The drive immediately writes the value back to zero. If the value is not included in the table a trip is initiated with the same trip number as the value provided the drive is not already tripped.

Action	Values written to 10.38	Trip code
No action	1 31 200 205 210 217-245	UV EEF SL1.HF SL2.HF SL3.HF HFx
Drive reset	100	
Clear trip and trip time logs	255	

10.40	**Status word**															
Coding	Bit	SP	FI	DE	Txt	VM	DP	ND	RA	NC	NV	PT	US	RW	BU	PS
								1		1		1			1	
Range	0 to 32,767															
Update rate	Background write															

The bits in this parameter correspond to the status bits in menu 10 as follows:

15	14	13	12	11	10	9	8
Not used	Not used	Pr **10.14**	Pr **10.13**	Not used	Not used	Pr **10.10**	Pr **10.09**

7	6	5	4	3	2	1	0
Pr **10.08**	Pr **10.07**	Pr **10.06**	Pr **10.05**	Pr **10.04**	Pr **10.03**	Pr **10.02**	Pr **10.01**

10.41	**Trip 0 time: years.days**															
Coding	Bit	SP	FI	DE	Txt	VM	DP	ND	RA	NC	NV	PT	US	RW	BU	PS
							3	1		1		1			1	1
Range	0.000 to 9.364 Years.Days															
Update rate	Background write															

10.42	**Trip 0 time: hours.minutes**															
Coding	Bit	SP	FI	DE	Txt	VM	DP	ND	RA	NC	NV	PT	US	RW	BU	PS
		1					2	1		1		1			1	1
Range	00.00 to 23.59 Hours.Minutes															
Update rate	Background write															

10.43	**Trip 1 time**															
10.44	**Trip 2 time**															
10.45	**Trip 3 time**															
10.46	**Trip 4 time**															
10.47	**Trip 5 time**															
10.48	**Trip 6 time**															
10.49	**Trip 7 time**															
10.50	**Trip 8 time**															
10.51	**Trip 9 time**															
Coding	Bit	SP	FI	DE	Txt	VM	DP	ND	RA	NC	NV	PT	US	RW	BU	PS
							2	1		1		1			1	1
Range	0 to 600.00 Hours.Minutes															
Update rate	Background write															

When a trip occurs the reason for the trip is put into the top location in the trip log (Pr **10.20 = {tr01, 0.51}**). At the same time either the time from the powered-up clock (if Pr **6.28** = 0) or from the run time clock (if Pr **6.28** = 1) is put into Trip 0 time (Pr **10.41** and Pr **10.42**). The times for earlier trips (Trip 1 to 9) are moved to the next parameter in the same way that trips move down the trip log. The time for Trips 1 to 9 are stored as the time difference between when Trip 0 occurred and the relevant trip in hours and minutes. The maximum time difference that can be stored is 600 hours. If this time is exceeded the value stored is 600.00.

If the powered-up clock is used as the source for this function all the times in the log are reset to zero at power-up because they were related to the time since the drive was powered-up last time. If the runtime clock is used the times are saved at power-down and then retained when the drive powers up again. If Pr **6.28**, which defines the clock source, is changed by the user the whole trip and trip time logs are cleared. It should be noted that the powered-up time can be modified by the user at any time. If this is done the values in the trip time log remain unchanged until a trip occurs. The new values put in the log for earlier trips (Trip 1 to 9) will become the time difference between the value of the power-up clock when the trip occurred and the value of the powered-up clock when the latest trip occurred. It is possible that this time difference may be negative, in which case the value will be zero.

10.52 - 10.61	**Trip Masks**															
Coding	Bit	SP	FI	DE	Txt	VM	DP	ND	RA	NC	NV	PT	US	RW	BU	PS
													1	1	1	
Range	0 to 216															
Default	0															
Update rate	Background read															

The user can mask some of the trips from tripping the drive. The trip can be completely masked (do nothing in the event of the selected trip) by setting the trip number into the parameter.

10.62 - 10.71	**Stop on Trip Masks**															
Coding	Bit	SP	FI	DE	Txt	VM	DP	ND	RA	NC	NV	PT	US	RW	BU	PS
	1												1	1		
Default	On (1)															
Update rate	Background read															

The user can mask some of the trips from tripping the drive. The trip can be completely masked (do nothing in the event of the selected trip) by setting the trip number into the parameter. The trip can be made to stop the drive and then trip, by enabling the associated bit parameter.

Trips that cannot be masked are UV, AOC, AtL.Err, PS, O.SPd, FOC, O.ht1, O.ht2, O.ht3, EEF, SLX.HF, S.OV, PLL Err, Enc9, SLAVE.Er and HF17 to HF29.

Example 1.

The user wants the drive to not trip when there is current loss on analog input 2. Enter 28 into Pr **10.52** and set Pr **10.62** to 0.

Example 2.

The user wants the drive to stop and then trip when there is current loss on analog input 2. Enter 28 into Pr **10.52** to achieve this.

10.72	**Trip Mask Active**															
Coding	Bit	SP	FI	DE	Txt	VM	DP	ND	RA	NC	NV	PT	US	RW	BU	PS
	1									1		1				
Range	0 to 1															
Default	0															
Update rate	Background write															

Set to 1 when a trip is being masked.

10.73	**Bridge Active**															
Coding	Bit	SP	FI	DE	Txt	VM	DP	ND	RA	NC	NV	PT	US	RW	BU	PS
					1					1		1			1	
Range	0 to 2															
Default	0															
Update rate	Background write															

This parameter will indicate which bridge is on.

"__ "No bridge

"_1 "Bridge 1 active

"2_ "Bridge 2 active

Where _ is a blank.

10.74	**Electrical phase back**															
Coding	Bit	SP	FI	DE	Txt	VM	DP	ND	RA	NC	NV	PT	US	RW	BU	PS
	1									1		1				
Range	0 to 1															
Update rate	Background read															

When 0 the firing pulses not phased back. When 1 the firing pulses are phased back or the drive disabled.

10.75	**Armature voltage clamp active**															
Coding	Bit	SP	FI	DE	Txt	VM	DP	ND	RA	NC	NV	PT	US	RW	BU	PS
	1									1		1				
Range	0 to 1															
Update rate	Background read															

Sets to 1 when the armature voltage clamp is activated. Prevents the voltage from increasing further.

When the armature voltage exceeds 1.15 times the supply voltage the armature voltage clamp is activated to prevent the voltage rising. SCR firing is inhibited until the voltage has fallen.

10.76	**Phase rotation**															
Coding	Bit	SP	FI	DE	Txt	VM	DP	ND	RA	NC	NV	PT	US	RW	BU	PS
					1					1		1				
Range	0 to 15 (see table below)															
Update rate	Background read															

This parameter gives the phase rotation of the L1, L2 and L3 terminals, with relation to E1 and E3 when voltage is first detected on L1, L2 and L3.

A supply loss trip will result if a phase is missing.

Example

L123 E21 phase rotation on L1, L2, L3 is clockwise, terminal E1 is connected to the same phase as L2 terminal, terminal E3 is connected to the same phase as L1 terminal.

Pr 10.76	Text	Comment
0	No L123	No voltage detected on L1, L2, L3
1	L123 E13	L1, L2, L3 clockwise
2	L123 E12	L1, L2, L3 clockwise
3	L123 E32	L1, L2, L3 clockwise
4	L123 E31	L1, L2, L3 clockwise
5	L123 E21	L1, L2, L3 clockwise
6	L123 E23	L1, L2, L3 clockwise
7	L321 E13	L1, L2, L3 anticlockwise
8	L321 E23	L1, L2, L3 anticlockwise
9	L321 E21	L1, L2, L3 anticlockwise
10	L321 E31	L1, L2, L3 anticlockwise
11	L321 E32	L1, L2, L3 anticlockwise
12	L321 E12	L1, L2, L3 anticlockwise
13	L120	L3 missing
14	L103	L2 missing
15	L023	L1 missing

10.77	**Input frequency**															
Coding	Bit	SP	FI	DE	Txt	VM	DP	ND	RA	NC	NV	PT	US	RW	BU	PS
							2			1		1			1	
Range	0 to 100.00															
Update rate	Background read															

The input frequency measured on the auxiliary terminals.

5.12 Menu 11: General drive setup

These parameters define the parameters that reside in the programmable area in menu 0.

11.21	**Parameter scaling**															
Coding	Bit	SP	FI	DE	TE	VM	DP	ND	RA	NC	NV	PT	US	RW	BU	PS
							3						1	1	1	
Range	0.000 to 9.999															
Default	1.000															
Update rate	Background read															

This parameter may be used to scale the value of Pr **0.20** seen via the LED keypad (not via serial comms). Any parameter routed to Pr **0.20** may be scaled. Scaling is only applied in the status and view modes. If the parameter is edited via the keypad it reverts to its un-scaled value during editing.

11.22	**Parameter displayed at power-up**															
Coding	Bit	SP	FI	DE	TE	VM	DP	ND	RA	NC	NV	PT	US	RW	BU	PS
							2					1	1	1	1	
Range	Pr **0.00** to Pr **0.90**															
Default	Pr **0.40**															
Update rate	Background read															

This parameter defines which menu 0 parameter is displayed on power-up.

11.23 {Si02, 0.67}	**Serial address**															
Coding	Bit	SP	FI	DE	TE	VM	DP	ND	RA	NC	NV	PT	US	RW	BU	PS
													1	1	1	
Range	00 to 247															
Default	1															
Update rate	Background read															

Used to define the unique address for the drive for the serial interface. The drive is always a slave.

ANSI

When the ANSI protocol is used the first digit is the group and the second digit is the address within a group. The maximum permitted group number is 9 and the maximum permitted address within a group is 9. Therefore, (Pr **11.23 = {Si02, 0.67}**) is limited to 99 in this mode. The value 00 is used to globally address all slaves on the system, and x0 is used to address all slaves of group x, therefore these addresses should not be set in this parameter.

Modbus RTU

When the Modbus RTU protocol is used addresses between 0 and 247 are permitted. Address 0 is used to globally address all slaves, and so this address should not be set in this parameter.

11.24	**Serial mode**															
Coding	Bit	SP	FI	DE	TE	VM	DP	ND	RA	NC	NV	PT	US	RW	BU	PS
					1								1	1	1	
Range	0 to 2															
Default	1															
Update rate	Background read															

This parameter defines the communications protocol used by the 485 comms port on the drive. This parameter can be changed via the drive keypad, via a Solutions Module or via the comms interface itself. If it is changed via the comms interface, the response to the command uses the original protocol. The master should wait at least 20 ms before sending a new message using the new protocol. (Note: ANSI uses 7 data bits, 1 stop bit and even parity; Modbus RTU uses 8 data bits, 2 stops bits and no parity.)

Parameter value	String	Comms mode
0	AnSI	ANSIx3.28 protocol
1	rtU	Modbus RTU protocol
2	Lcd	Modbus RTU protocol, but only with an LCD keypad

ANSIx3.28 protocol

Full details of the CT implementation of ANSIx3.28 are given in Chapter 6 *Serial communications protocol.*

Modbus RTU protocol

Full details of the CT implementation of Modbus RTU are given in Chapter 6 *Serial communications protocol.*

The protocol provides the following facilities:

- Drive parameter access with basic Modbus RTU
- Drive parameter access via CMP extensions
- Solutions Module internal parameter access via CMP extensions
- Access via a Solutions Module onto a network via CMP extensions (see specific Solutions Module specifications for details)
- Drive parameter database upload via CMP extensions
- Drive Onboard Application Lite Ladder program upload/download via CMP extensions
- The protocol supports access to 32 bit floating point parameters

The following product specific limitations apply:

- Maximum slave response time when accessing the drive is 100 ms
- Maximum slave response time when accessing Solutions Module internal parameters or via a Solutions Module to a network may be longer than 100 ms (see specific Solutions Module specifications for details)
- Maximum number of 16 bit registers that can be written to, or read from, the drive itself is limited to 16
- Maximum number of 16 bit registers that can be written to, or read from, a Solutions Module or via a Solutions Module - see specific Solutions Module specification
- The communications buffer can hold a maximum of 128bytes

Modbus RTU is also supported via the keypad synchronous serial interface. This is covered in a separate specification related to the keypad port.

Modbus RTU protocol, but with LCD keypad only
When this mode is selected it is only possible to read or write parameters in menu 99 within the drive and only using Modbus rtu (excluding FC40). Also Pr **99.29** is set to one by the drive. If Pr **99.29** is set to zero full communications is enabled for 5 seconds, after which Pr **99.29** is reset to one by the drive. This feature is provided so that users can restrict the use of the 485 comms port to the LCD keypad only. When this mode is selected access to the restricted menu 99 is only applied to the RS485 port and not the keypad port.

11.25 {Si01, 0.66}	Baud rate															
Coding	Bit	SP	FI	DE	TE	VM	DP	ND	RA	NC	NV	PT	US	RW	BU	PS
					1								1	1	1	
Range	0 to 9															
Default	6															
Update rate	Background read															

Used in all comms modes to define the baud rate.

Parameter value	String/baud rate
0	300
1	600
2	1200
3	2400
4	4800
5	9600
6	19200
7	38400
8*	57600
9*	115200

*Modbus RTU only

This parameter can be changed via the drive keypad, via a Solutions Module or via the comms interface itself. If it is changed via the comms interface, the response to the command uses the original baud rate. The master should wait at least 20 ms before sending a new message using the new baud rate.

11.26	Minimum comms transmit delay															
Coding	Bit	SP	FI	DE	TE	VM	DP	ND	RA	NC	NV	PT	US	RW	BU	PS
													1	1	1	
Range	0 to 250 ms															
Default	2															
Update rate	Background read															

There will always be a finite delay between the end of a message from the host (master) and the time at which the host is ready to receive the response from the drive (slave). The drive does not respond until at least 1 ms after the message has been received from the host allowing 1 ms for the host to change from transmit to receive mode. This initial delay can be extended using Pr **11.26** if required for both ANSI and Modbus RTU protocols.

Pr 11.26	Action
0	The transmit buffers are turned on and data transmission begins immediately
1	The transmit buffers are turned on and data transmission begins after 1 ms
2 or more	The transmit buffers are turned on after an additional delay of (Pr **11.26** -1) ms and data transmission begins after a further 1 ms delay

Note that the drive holds its own transmitters active for up to 1 ms after it has transmitted data before switching to the receive mode, the host should not send any data during this time.

Modbus RTU uses a silent period detection system to detect the end of a message. This silent period is either the length of time for 3.5 characters at the present baud rate or the length of time set in Pr **11.26**, whichever is the longest.

11.29 {di14, 0.49}	**Software version**															
Coding	Bit	SP	FI	DE	TE	VM	DP	ND	RA	NC	NV	PT	US	RW	BU	PS
							2	1		1		1			1	
Range	1.00 to 99.99															
Update rate	Write at power-up															

The drive software version consists of three numbers, xx.yy.zz. Pr **11.29 = {di14, 0.49}**) displays xx.yy and zz is displayed in Pr **11.34**.

Where:

xx specifies a change that affects hardware compatibility

yy specifies a change that affects product documentation

zz specifies a change that does not affect the product documentation.

11.30	**User security code**															
Coding	Bit	SP	FI	DE	TE	VM	DP	ND	RA	NC	NV	PT	US	RW	BU	PS
								1		1		1		1	1	1
Range	0 to 999															
Default	0															
Update rate	Background read															

If any number other than 0 is programmed into this parameter user security is applied so that no parameters except (Pr **11.44 = {SE14, 0.35}**) can be adjusted with the LED keypad. When this parameter is read via an LED keypad and security is locked it appears as zero. The security code can be modified via serial comms etc. by setting this parameter to the required value, setting (Pr **11.44 = {SE14, 0.35}**) to 2 and initiating a reset by setting Pr **10.38** to 100. However security can only be cleared via the LED keypad.

11.32	**Current rating**															
Coding	Bit	SP	FI	DE	TE	VM	DP	ND	RA	NC	NV	PT	US	RW	BU	PS
							1	1		1		1			1	
Range	0.00 to 10000.0 A															
Update rate	Write at power-up															

This parameter indicates the continuous current rating of the drive. See Pr **11.55** for more details.

11.33	**Drive voltage rating**															
Coding	Bit	SP	FI	DE	TE	VM	DP	ND	RA	NC	NV	PT	US	RW	BU	PS
					1			1		1		1			1	
Range	0 (480 V) , 1 (575 V), 2 (690 V)															
Update rate	Write at power-up															

This parameter has three possible values (480 V, 575 V, 690 V) and indicates the voltage rating of the drive.

11.34	Software sub-version															
Coding	Bit	SP	FI	DE	TE	VM	DP	ND	RA	NC	NV	PT	US	RW	BU	PS
								1		1		1			1	
Range	0 to 99															
Update rate	Write at power-up															

The drive software version consists of three numbers, xx.yy.zz. (Pr **11.29 = {di14, 0.49}**) displays xx.yy and zz is displayed in Pr **11.34**.

Where:

xx specifies a change that affects hardware compatibility

yy specifies a change that affects product documentation

zz specifies a change that does not affect the product documentation

11.35	Number of modules															
Coding	Bit	SP	FI	DE	TE	VM	DP	ND	RA	NC	NV	PT	US	RW	BU	PS
												1	1	1	1	
Range	0 to 3															
Update rate	Write at power-up															

In a parallel 6-pulse system this parameter can be set to the number of drives in the parallel system. When this parameter is non-zero, (Pr **4.01 = {di08, 0.43}**) and Pr **4.02** are multiplied by this parameter to give the total armature current for the system.

11.36	SMARTCARD parameter data previously loaded															
Coding	Bit	SP	FI	DE	TE	VM	DP	ND	RA	NC	NV	PT	US	RW	BU	PS
										1		1	1		1	
Range	0 to 999															
Default	0															
Update rate	Background write															

This parameter shows the number of the data block last parameter or difference from default data block transferred from a SMARTCARD to the drive.

11.37	SMARTCARD data number															
Coding	Bit	SP	FI	DE	TE	VM	DP	ND	RA	NC	NV	PT	US	RW	BU	PS
										1				1	1	
Range	0 to 1003															
Default	0															
Update rate	Background read															

Data blocks are stored on a SMARTCARD with header information including a number to identify the block .The header information also includes the type of data stored in the block (i.e. the file type), the drive mode, if this is parameter or difference from default data, the version number and a checksum. This data can be viewed through Pr **11.38** to Pr **11.40** by increasing or decreasing Pr **11.37**. This parameter jumps between the data numbers of the data blocks present on the card. If this parameter is increased above the highest data block on the card it causes Pr **11.40** to display the following information about the card:

1000 - shows the space left on the card for data blocks in 16 byte pages

1001 - shows the total space available on the card for data blocks in 16 byte pages

1002 - shows the state of the read-only (bit 0) and warning suppression flags (bit 1)

1003 - shows the product identifier

It should be noted that 16 bytes are reserved at the beginning and the end of the card that cannot be used to hold data. Therefore a 4096 byte card has 4064 bytes (254 x 16 byte pages) available to hold data. Compatible cards from 4Kbytes to 512Kbytes may be used with the drive. The first 16 bytes on the card hold the card header information including the read-only flag, which can be set to make the whole card read-only, and the warning suppression flag, which can be set to prevent C.rtg and C.Optn trips when data is transferred to the drive from a card.

The actions of erasing a card, erasing a file, creating a new file, changing a menu 0 parameter, or inserting a new card will set Pr **11.37** to 0.

Various SMARTCARD actions can be initiated via Pr **x.00**, or the copying parameter (Pr **11.42 = {SE09, 0.30}**), and resetting the drive as given in the following table:

Codes	Actions
Pr **x.00** = rEAd 1	Transfer SMARTCARD data block 1 to the drive.
Pr **x.00** = rEAd 2	Transfer SMARTCARD data block 2 to the drive.
Pr **x.00** = rEAd 3	Transfer SMARTCARD data block 3 to the drive.
Pr **x.00** = PrOg 1	Transfer drive parameters as difference from default to SMARTCARD data block number 1.
Pr **x.00** = PrOg 2	Transfer drive parameters as difference from default to SMARTCARD data block number 2.
Pr **x.00** = PrOg 3	Transfer drive parameters as difference from default to SMARTCARD data block number 3.
Pr **x.00** = 2001	Transfer drive parameters as difference from defaults to a bootable SMARTCARD data block with block number 1. This will clear data block 1 on the card if it already exists.
Pr **x.00**= 3yyy	Transfer drive parameters to a SMARTCARD data block number yyy.
Pr **x.00** = 4yyy	Transfer drive data as difference from defaults to SMARTCARD data block number yyy.
Pr **x.00**= 5yyy	Transfer drive user program to SMARTCARD data block number yyy.
Pr **x.00** = 6yyy	Transfer SMARTCARD data block yyy to the drive.
Pr **x.00** = 7yyy	Erase SMARTCARD data block yyy.
Pr **x.00** = 8yyy	Compare drive parameters with data block yyy.
Pr **x.00** = 9555	Clear SMARTCARD warning suppression flag.
Pr **x.00** = 9666	Set SMARTCARD warning suppression flag.
Pr **x.00**= 9777	Clear SMARTCARD read-only flag.
Pr **x.00** = 9888	Set SMARTCARD read-only flag.
Pr **x.00** = 9999	Erase SMARTCARD.
Pr **11.42** (**SE09, 0.30**) = Read	Transfer SMARTCARD data block 1 to the drive provided it is a parameter file.
Pr **11.42** (**SE09, 0.30**) = Prog	Transfer drive parameters to a SMARTCARD data block number 1.
Pr **11.42** (**SE09, 0.30**) = Auto	Transfer drive parameters to a SMARTCARD data block with data block number 1 provided.
Pr **11.42** (**SE09, 0.30**) = boot	Pr **11.42** (**SE09, 0.30**) has been changed since power-up.

The data, and the format of the data, is different depending on the method used to store it on a SMARTCARD. The different formats are described below. In addition to data transfers a compare function is provided.

If 8yyy is entered in Pr **x.00** and the drive is reset data block yyy on the SMARTCARD is compared with the data in the drive. If the compare is successful Pr **x.00** is simply set to 0. If the compare fails a trip is initiated and parameter x.00 is not cleared. This function can be used with all data block types except the option type (18) and Opt.prg (19) type of data block.

Parameter file type data block

This type of data block is created when 3xxx in Pr **x.00**, the copying parameter (Pr **11.42 = {SE09, 0.30}**) or auto/boot mode is used to initiate the transfer. The data block (referred to as a parameter file) contains the complete data from all user save (US) parameters except those with the NC coding bit set. Parameter RAM is used as the source of this information. Power-down save (PS) are not saved to the SMARTCARD. When the data is transferred back to a drive, it is transferred to the drive RAM and then the drive EEPROM. A parameter save is not required to retain the data after power-down. Before the data is taken from the card, defaults are loaded in the destination drive using the same default code as was last used in the source drive.

Difference from defaults type data block

This type of data block is created when 4xxx in Pr **x.00** is used to initiate the transfer. The data held in the data block has changed between different software versions as follows:

Parameters with the following attributes: NC=0 (clonable) and US=1 (user save), and menu 20 parameters except Pr **20.00** if they are different from their default value. If a parameter is user save (US), but has no default (ND) it is saved on the card whatever its value.

The data density is not as high as a parameter file type data block, but in most cases the number of differences from default is small and the data blocks are therefore smaller. This method can be used, for example, for creating drive macros. Parameter RAM is used as the source of this information.

When the data is transferred back to a drive, using 6yyy in Pr **x.00**, it is transferred to the drive RAM and then to the drive EEPROM. A parameter save is not required to retain the data after power-down.

Onboard Application Lite user program data blocks

This type of data block is created when 5xxx in Pr **x.00** is used to initiate the transfer. The Onboard Application Lite user program from a drive may be transferred to/from internal flash memory from/to a SMARTCARD. If the user program is transferred from a drive with no program loaded the block is still created on the card, but contains no data. If this is then transferred to a drive the drive will then have no user program.

Option type data block

This type of block is created by an application module, and contains user defined data.

When transferring data between drives the following should be noted:

Parameter transfer failure

When parameter or default difference data is transferred to the drive the parameters are automatically saved to drive EEPROM. If the transfer from the card fails for any reason the drive produces the appropriate trip. If the failure occurs after the transfer has begun, it is possible that some, but not all the parameters will have been updated with the card data. However, if the transfer fails the parameters are not saved to drive EEPROM, therefore only the RAM values will be incorrect. If the drive is powered down and then powered up again the original drive parameters will be restored.

Read-only function

Data blocks with numbers from 1 to 499 can be created or erased by the user. Data block with numbers 500 and above are read-only and cannot be created or erased by the user. The whole card may also be protected from writing or erasing by setting the read-only flag. If the card or a data block on the card is read-only, then the operation to erase the whole card is disabled.

Different voltage ratings

If the voltage rating of the source and destination drive are different then the parameters are transferred with the exception of rating dependent parameters (RA attribute set, see table below), which are left at their default values. In this case a C.rtg trip is given as a warning that this has happened. It is possible to suppress this warning trip for any data transfer to the drive, including a boot transfer at power-up by setting the warning suppression flag for the whole card.

Parameter number	Function
Pr **4.05** to Pr **4.07**	Current limits
Pr **4.24**	User current maximum scaling
Pr **5.07 {SE07, 0.28}**	Motor rated current
Pr **5.09 {SE06, 0.27}**	Armature rated voltage

Different Solutions Modules installed

If the categories of the Solutions Modules installed to the source drive are different to the destination drive then the parameters are transferred with the exception of the parameters in the menus of the modules that are different. These parameters are left at their default values. In this case a C.Optn trip is given as a warning. It is possible to suppress this warning trip for any data transfer to the drive, including a boot transfer at power-up by setting the warning suppression flag for the whole card.

Different current/voltage rating with a parameter file type data block

If the current or voltage ratings of the source and destination drive are different and the parameters stored as a parameter file (not differences from default) then rating dependant parameters are set to their defaults and a C.rtg trip is produced as described above where the voltage ratings are different. It is possible to suppress this warning trip for any data transfer to the drive, including a boot transfer at power-up by setting the warning suppression flag for the whole card.

Effects of variable maximums if ratings or options are different

It should be noted that if ratings of the source and destination drives are different, or the Solutions Modules installed to the source and destination drives are different, it is possible that some parameters with variable maximums may be limited and not have the same values as on the card. For example the user current maximum scaling (Pr **4.24**) is rating dependent and could be set to its default value when it is transferred between drives of different ratings, but this could also affect the torque reference (Pr **4.08**) as this uses Pr **4.24** as its maximum. Also different position feedback Solutions Modules can apply different limits on the speed references, therefore these can be affected when parameters are transferred between drives with different position feedback Solutions Modules installed where the Solutions Module is being used for the drive position feedback.

Product identifier

The product identifier is written to the card when the whole card is erased.

If the identifier does not match the drive product and the card contains any data blocks a C.Prod trip is produced. Also if the following functions are initiated a C.Acc trip is produced and the card or drive data is not affected: erase file, transfer data block from card to drive, or transfer data block from drive to card. It is still possible to use Pr **11.37** to browse information about the whole card (i.e. Pr **11.37** = 1000 to 1003), but it is not possible to see the data block information (i.e. Pr **11.37** < 1000). It is also possible to change the card header information (i.e. read-only flag and warning suppression flag). This feature allows the read-only flag to be cleared so that a card can be erased to be used with the product that performs the card erase.

If the card does not contain any data blocks (i.e. an erased card) and the identifier does not match that of the drive then the drive will automatically change the identifier on the card to match when it is first inserted.

Product	Product Identifier
Unidrive SP (standard)	255
Digitax ST	2
Affinity	3
Mentor MP	4

11.38	SMARTCARD data type/mode															
Coding	Bit	SP	FI	DE	TE	VM	DP	ND	RA	NC	NV	PT	US	RW	BU	PS
					1			1		1		1			1	
Range	0 to 18															
Update rate	Background write															

Gives the type/mode of the data block selected with Pr **11.37** as shown below:

Pr 11.38	String	Type/mode
0	FrEE	Value when Pr **11.37** = 0
1	3C.SE	Commander SE mode parameter file (not used)
2	3OpEn.LP	Open-loop mode parameter file
3	3CL.VECt	Closed-loop vector mode parameter file
4	3SErVO	Servo mode parameter file
5	3REGEn	Regen mode parameter file
6	3DC	DC mode parameter file
7-8	3Un	Unused
9	4C.SE	Commander SE mode difference from default file (not used)
10	4OpEn.LP	Open-loop mode difference from default file
11	4CL.VECt	Closed-loop vector mode difference from default file
12	4SErVO	Servo mode difference from default file
13	4REGEn	Regen mode difference from default file
14	4DC	DC mode difference from default file
15-16	4Un	Unused
17	LAddEr	Onboard Application Lite user program file
18	Option	A file containing user defined data (normally created by an SM-Applications Solutions Module)
19	OptPrg	A file containing user defined data (normally created by an SM-Applications Solutions Module user program (Digitax ST only)

11.39	**SMARTCARD data version**															
Coding	Bit	SP	FI	DE	TE	VM	DP	ND	RA	NC	NV	PT	US	RW	BU	PS
										1				1	1	
Range	0 to 9,999															
Default	0															
Update rate	Background read/write															

Gives the version number of the data block. This is intended to be used when data blocks are used as drive macros. If a version number is to be stored with a data block this parameter should be set to the required version number before the data is transferred. Each time Pr **11.37** is changed by the user the drive puts the version number of the currently viewed data block in this parameter.

11.40	**SMARTCARD data checksum**															
Coding	Bit	SP	FI	DE	TE	VM	DP	ND	RA	NC	NV	PT	US	RW	BU	PS
								1		1		1			1	
Range	0 to 65,335															
Update rate	Background write															

Gives the checksum of the data block, space left on the card, the total space on the card for the card flags see Pr **11.37** for details.

11.41	**Status mode time-out**															
Coding	Bit	SP	FI	DE	TE	VM	DP	ND	RA	NC	NV	PT	US	RW	BU	PS
													1	1	1	
Range	0 to 250 s															
Default	240															
Update rate	Background read															

Sets the timeout for the drive display to revert to status mode from edit mode following no key presses. Although this parameter can be set to less than 2s, the minimum timeout is 2s.

11.42 {SE09, 0.30}	Parameter copying															
Coding	Bit	SP	FI	DE	TE	VM	DP	ND	RA	NC	NV	PT	US	RW	BU	PS
					1					1			*	1	1	
Range	0 to 4															
Default	0															
Update rate	Background read															

* Modes 1 and 2 are not US (i.e. not saved when drive parameters are saved), modes 3 and 4 are US. Therefore this parameter can only be saved to EEPROM if it has a value of 0, 3 or 4.

Reading (1)

Setting (Pr **11.42 = {SE09, 0.30}**) to 1 and resetting the drive will transfer the data from the card into the drive parameter and then the drive EEPROM, provided data block 1 exists and is a parameter file for the current drive mode. All SMARTCARD trips apply. When the action is complete this parameter is automatically reset to zero.

Programming (2)

Setting (Pr **11.42 = {SE09, 0.30}**) to 2 and resetting the drive will save the parameters to a card, i.e. equivalent to writing 3001 to Pr **x.00**. If the data block already exists it is automatically over-written. When the action is complete this parameter is automatically reset to zero.

Auto (3)

Changing Pr **11.42** to 3 and resetting the drive will save the complete parameter set from the drive parameters to the card, i.e. equivalent to writing 3001 to Pr **x.00**. If the data block already exists it is automatically overwritten. If the card is removed when (Pr **11.42 = {SE09, 0.30}**) is set to 3, (Pr **11.42 = {SE09, 0.30}**) will be set to 0. The action of setting (Pr **11.42 = {SE09, 0.30}**) to 0 when a card is removed forces the user to change (Pr **11.42 = {SE09, 0.30}**) back to 3 if auto mode is still required. The user will need to set (Pr **11.42 = {SE09, 0.30}**) to 3 and reset the drive to write the complete parameter set to the new card.

When a parameter in menu zero is changed via the keypad and a card is installed the parameter is saved both to the drive EEPROM and the card. Only the new value of the modified parameter is written to the EEPROM and the card. If (Pr **11.42 = {SE09, 0.30}**) was not cleared automatically when a card is removed, then when a new card is inserted that contains data block 1 the modified parameter would be written to the existing data block 1 on the new card and the rest of the parameters in this data block may not be the same as those in the drive.

When (Pr **11.42 = {SE09, 0.30}**) is equal to 3 and the parameters in the drive are saved, the card is also updated, therefore the card becomes a copy of the drive parameters. At power up, if (Pr **11.42 = {SE09, 0.30}**) is set to 3, the drive will save the complete parameter set to the card. This is done to ensure that if a card is inserted while the drive is powered down the new card will have the correct data after the drive is powered up again.

Boot (4)

When (Pr **11.42 = {SE09, 0.30}**) is set 4, the drive operates in the same way as with (Pr **11.42 = {SE09, 0.30}**) set to 3, and automatically creates a copy of its parameters on a SMARTCARD. If a card is present at power up and it has (Pr **11.42 = {SE09, 0.30}**) stored as 4, then the following actions are taken:

1. If data block 1 exists, and is a parameter file for a drive mode that is allowed for the drive derivative, the parameters on the card are transferred to the drive and saved in the drive EEPROM.
2. If data block 2 exists and is type 17, the user program on the card is transferred to the drive.

(Pr **11.42 = {SE09, 0.30}**) is set to zero after the data transfer is complete.

(Pr **11.42 = {SE09, 0.30}**) has the NC (not clonable attribute) set, and so its value is not stored on a SMARTCARD. Therefore the value of this parameter taken from a card is always zero. However, when data is transferred to a card from the source drive the value of this parameter is held in the data block header so that the destination drive can detect when boot transfer is required on power-up (i.e. the source drive had this parameter set to 4).

It is possible to create a difference from default bootable file by setting parameter Pr **x.00** to 2001 and resetting the drive. This type of file causes the drive to behave in the same way at power-up as a file created with boot mode set up with (Pr **11.42 = {SE09, 0.30}**). The difference from default file has the added advantage of including menu 20 parameters. A bootable difference from default file can only be created in one operation and parameters cannot be added as they are saved via menu zero.

11.44 {SE14, 0.35}	Security status															
Coding	Bit	SP	FI	DE	TE	VM	DP	ND	RA	NC	NV	PT	US	RW	BU	PS
					1			1				1	1	1	1	
Range	0 to 2															
Default	0															
Update rate	Background read															

This parameter controls access via the drive LED keypad as follows:

Value	String	Action
0	L1	Only menu 0 can be accessed
1	L2	All menus can be accessed
2	Loc	Lock user security when drive is reset. (This parameter is set to L1 after reset)

The LED keypad can adjust this parameter even when user security is set.

11.45	**Motor 2 parameters select**															
Coding	Bit	SP	FI	DE	TE	VM	DP	ND	RA	NC	NV	PT	US	RW	BU	PS
	1												1	1		
Default	0															
Update rate	Background read															

When this bit is set to one the motor 2 parameters in menu 21 become active instead of the equivalent parameters in other menus. Changes will only be implemented when the drive is disabled. When the motor 2 parameters are active the decimal point that is second from the right on the 1st row of the display is lit. If this parameter is one when an autotune is carried out (Pr **5.12** = 1), the results of the autotune are written to the equivalent second motor parameters instead of the normal parameters. Each time this parameter is changed the accumulator for motor thermal protection is reset to zero.

11.46	**Defaults previously loaded**															
Coding	Bit	SP	FI	DE	TE	VM	DP	ND	RA	NC	NV	PT	US	RW	BU	PS
					1							1	1		1	
Range	0 to 2															
Default	0															
Update rate	Background write															

Displays the last loaded defaults.

11.47	**Drive Onboard Application Lite Ladder Program Enable**															
Coding	Bit	SP	FI	DE	TE	VM	DP	ND	RA	NC	NV	PT	US	RW	BU	PS
													1	1	1	
Range	0 to 2															
Default	2															
Update rate	Background read															

This parameter is used to start and stop the drive Onboard Application Lite program.

Value	Description
0	Halt the Drive Onboard Application Lite ladder Program.
1	Run the Drive Onboard Application Lite ladder Program (if installed). Any out-of-range parameter writes attempted will be clipped to the maximum / minimum values valid for that parameter before being written.
2	Run the drive Onboard Application Lite ladder Program (if installed). Any out-of-range parameter writes attempted will cause a drive trip.

11.48	**Drive Onboard PLC program status**															
Coding	Bit	SP	FI	DE	TE	VM	DP	ND	RA	NC	NV	PT	US	RW	BU	PS
								1		1		1				
Range	-128 to +127															
Update rate	Background write															

The Drive Onboard Application Lite Ladder Program Status parameter indicates to the user the actual state of the drive Onboard Application Lite Ladder Program. (not installed / running / stopped / tripped.)

Value	Description
-n	Onboard Application Lite Ladder Program caused a drive trip due to an error condition while running rung n. Note that the rung number is shown on the display as a negative number.
0	Onboard Application Lite Ladder Program is not installed.
1	Onboard Application Lite Ladder Program is installed but stopped.
2	Onboard Application Lite Ladder Program is installed and running.

11.49	Drive Onboard application lite ladder programming events															
Coding	Bit	SP	FI	DE	TE	VM	DP	ND	RA	NC	NV	PT	US	RW	BU	PS
								1		1		1			1	1
Range	0 to 65,535															
Update rate	Background write															

The Drive Onboard Application Lite Ladder Programming Events parameter holds the number of times a Onboard Application Lite Ladder program download has taken place and is 0 on dispatch from the factory. If the Drive Onboard Application Lite Ladder Programming Events is greater than the maximum value which may be represented by this parameter the value will be clipped to the maximum value. This parameter is not altered when defaults are loaded.

11.50	Drive Onboard Application Lite Ladder Program Average Scan Time															
Coding	Bit	SP	FI	DE	TE	VM	DP	ND	RA	NC	NV	PT	US	RW	BU	PS
								1		1		1			1	
Range	0 to 65,535 ms															
Update rate	Onboard Application Lite Ladder program execution period															

The Onboard Application Lite Ladder Program Maximum Scan Time parameter gives the longest scan time within the last ten scans of the drive Onboard Application Lite Ladder Program. If the scan time is greater than the maximum value that may be represented by this parameter the value will be clipped to the maximum value.

11.51	Drive Onboard Application Lite Ladder Program first run															
Coding	Bit	SP	FI	DE	TE	VM	DP	ND	RA	NC	NV	PT	US	RW	BU	PS
	1							1		1		1				
Range	0 or 1															
Update rate	Onboard Application Lite Ladder program execution period															

The Drive Onboard Application Lite Ladder Program first run parameter is set for the duration of the first ladder diagram scan from the ladder diagram stopped state. This enables the user to perform any required initialization every time the ladder diagram is run. This parameter is set every time the ladder is stopped.

11.52	Drive serial number															
Coding	Bit	SP	FI	DE	TE	VM	DP	ND	RA	NC	NV	PT	US	RW	BU	PS
										1		1			1	
Range	0 to 999 999 999															
Update rate	Background read															

11.53	Build location															
Coding	Bit	SP	FI	DE	TE	VM	DP	ND	RA	NC	NV	PT	US	RW	BU	PS
										1		1			1	
Range	0 to 255															
Update rate	Background read															

Pr **11.52** and Pr **11.53** give a unique drive serial number for the drive.

Digits 876 543 210

Format

Parameter	Digits	Description	Range
11.53	All	Build location	0-255
11.52	8-3	Works order number	0-999999
11.52	2-0	Number	0-999

11.55	**Drive rating number**															
Coding	Bit	SP	FI	DE	TE	VM	DP	ND	RA	NC	NV	PT	US	RW	BU	PS
								1		1		1				
Range	0 to 68															
Update rate	Background read															

Number	Frame	Voltage rating	Quadrant variant	Current rating	Model
1	1A	480 V	Single	25 A	MP25
2				45 A	MP45
3				75 A	MP75
4			Four	25 A	MP25R
5				45 A	MP45R
6				75 A	MP75R
7	1B		Single	105 A	MP105
8				155 A	MP155
9				210 A	MP210
10			Four	105 A	MP105R
11				155 A	MP155R
12				210 A	MP210R
13	1A	575 V	Single	25 A	MP25
14				45 A	MP45
15				75 A	MP75
16			Four	25 A	MP25R
17				45 A	MP45R
18				75 A	MP75R
19	1B		Single	105 A	MP105
20				155 A	MP155
21				210 A	MP210
22			Four	105 A	MP105R
23				155 A	MP155R
24				210 A	MP210R
25	2A	480 V	Single	350 A	MP350
26				420 A	MP420
27				550 A	MP550
28			Four	350 A	MP350R
29				420 A	MP420R
30				550 A	MP550R
31		690V	Single	350 A	MP350
32					
33	2A	690 V	Single	470 A	MP470
34	2A	690 V	Four	350 A	MP350R
35					
36	2A	690 V	Four	470 A	MP470R
37	2B	480 V	Single	700 A	MP700
39				900 A	MP900
40			Four	700 A	MP700R
41					
42	2B	480 V	Four	900 A	MP900R
43		690 V	Single	700 A	MP700
44				825 A	MP825
45					
46	2B	690 V	Four	700 A	MP700R
47				825 A	MP825R
48					
49	2C	480 V	Single	1200 A	MP1200
50				1850 A	MP1850
51		690 V		1200 A	MP1200
52				1850 A	MP1850

Number	Frame	Voltage rating	Quadrant variant	Current rating	Model
53	2D	480 V	Four	1200 A	MP1200R
54				1850 A	MP1850R
55		690 V		1200 A	MP1200R
56				1850 A	MP1850R
57	2A	575 V	Two	350 A	MP350A5
58				470 A	MP470A5
59			Four	350 A	MP350A5R
60				470 A	MP470A5R
61	2B		Two	700 A	MP700A5
62				825 A	MP825A5
63			Four	700 A	MP700A5R
64				825 A	MP825A5R
65	2C		Two	1200 A	MP1200A5
66				1850 A	MP1850A5
67	2D		Four	1200 A	MP1200A5R
68				1850 A	MP1850A5R

11.56	Power PCB software version															
Coding	Bit	SP	FI	DE	TE	VM	DP	ND	RA	NC	NV	PT	US	RW	BU	PS
							2	1		1		1			1	
Range	1.00 to 99.99															
Update rate	Write at power-up															

The power PCB software version consists of two numbers xx.yy. xx.yy is displayed in this parameter. Where xx specifies a change that affects hardware compatibility, yy specifies a change that affects product documentation.

11.57	Serial programmable source															
Coding	Bit	SP	FI	DE	TE	VM	DP	ND	RA	NC	NV	PT	US	RW	BU	PS
				1			2					1	1	1	1	
Range	Pr **0.00** to Pr **22.99**															
Default	00.00															
Update rate	Background															

Defines an output parameter or input parameter when input or output serial mode is selected by serial mode parameter in the application menu. Intended for use by Solutions Modules.

11.58	Serial scaling															
Coding	Bit	SP	FI	DE	TE	VM	DP	ND	RA	NC	NV	PT	US	RW	BU	PS
													1	1	1	
Range	0 to 1999															
Default	1000															
Update rate	Background															

Scales the input data in input serial mode. Intended for use by Solutions Modules.

11.59	Mentor 2 parameter emulator module control															
Coding	Bit	SP	FI	DE	TE	VM	DP	ND	RA	NC	NV	PT	US	RW	BU	PS
													1	1	1	
Range	0 to 3															
Default	0															
Update rate	Background															

This parameter allows the EIA (RS) -485 communications port of the specified Solutions Module slot to emulate an MD29 or Mentor 2.

The module in the specified slot will if capable, perform parameter mappings and conversions so that the module “looks like” an MD29 or Mentor 2.

For example :

An ANSI master device transmits a parameter read message to a number of Mentor 2 drives over EIA (RS) -485.

At some point, one of the Mentor 2 drives is replaced with a Mentor MP drive. The EIA (RS) -485 cable is wired to an SM-Applications module in slot 3 of the Mentor MP instead of being wired into the drive.

If the ANSI master device attempts to read Pr **2.06** (intending to read Mentor 2 Pr **2.06**) the SM-Applications module will read Mentor MP Pr **2.06** giving an unexpected result to the ANSI master.

If Pr **11.59** on the Mentor MP is set to 3 (to enable Mentor 2 emulation for the installed SM-Applications Plus module) the SM-Applications Plus module will treat incoming serial parameter reads for ANSI, ASCII and RTU modes as being in “Mentor 2” format.

In this example the SM-Applications module will receive the command to read Mentor 2 Pr **2.06** and will perform an equivalent parameter read (in this case it will read Mentor MP Pr **2.25**, divide the value by 100 and return the result).

In this way the master device does not need to be modified to consider a Mentor MP on the communications network. The *SM-Applications Plus* documentation includes a list of the conversions provided.

Note that the SM-Applications Plus module does not provide a conversion for every Mentor 2 parameter

The user program in the SM-Applications Plus module, allows the user to create their own conversion functions if required, either to extend the set of parameters which can be converted, or to override one of the conversions which are provided.

Only one Solutions Module on a Mentor MP may perform Mentor 2 parameter emulation at a time.

Value	
0	No Solutions Module will operate communications in porting mode.
1	Solutions Module in slot 1 will operate communications in porting mode if capable.
2	Solutions Module in slot 2 will operate communications in porting mode if capable.
3	Solutions Module in slot 3 will operate communications in porting mode if capable.

11.60 & 11.61	**Application parameters**															
Coding	Bit	SP	FI	DE	TE	VM	DP	ND	RA	NC	NV	PT	US	RW	BU	PS
								1		1				1		
Range	±16,000															
Update rate	Background															

Intended for use by Solutions Modules.

11.62	**Full power discharge time**															
Coding	Bit	SP	FI	DE	TE	VM	DP	ND	RA	NC	NV	PT	US	RW	BU	PS
							1						1	1	1	
Range	0 to 25.0 s															
Default	0.0															
Update rate	Background read															

This parameter defines the maximum on-time that the externally installed discharge resistor can stand volts without damage.

Drive voltage rating	Switching point volts
480 V	1100 V
575 V	1400 V
690 V	1600 V

11.63	**Full power discharge period**															
Coding	Bit	SP	FI	DE	TE	VM	DP	ND	RA	NC	NV	PT	US	RW	BU	PS
							1						1	1	1	
Range	0 to 1500.0 s															
Default	0.0															
Update rate	Background read															

This parameter defines the time period which must elapse between consecutive capacitor discharge periods of maximum power as defined by Pr **11.60**. The setting of this parameter is used in determining the thermal filter of the external discharge resistor installed. It is assumed that the temperature will fall by 99 % in this time, and so the filter is Pr **11.60** / 5. If either Pr **11.60** or Pr **11.61** are set to their default values, the software assumes that only the internal discharge resistance is being used.

The external discharge resistor temperature is modelled by the drive as shown below and displayed as a percentage in Pr **11.63**. The temperature rises in proportion to the power flowing into the resistor and falls in proportion to the difference between the resistor temperature and ambient. The same model is used to determine the temperature of the internal discharge resistors.

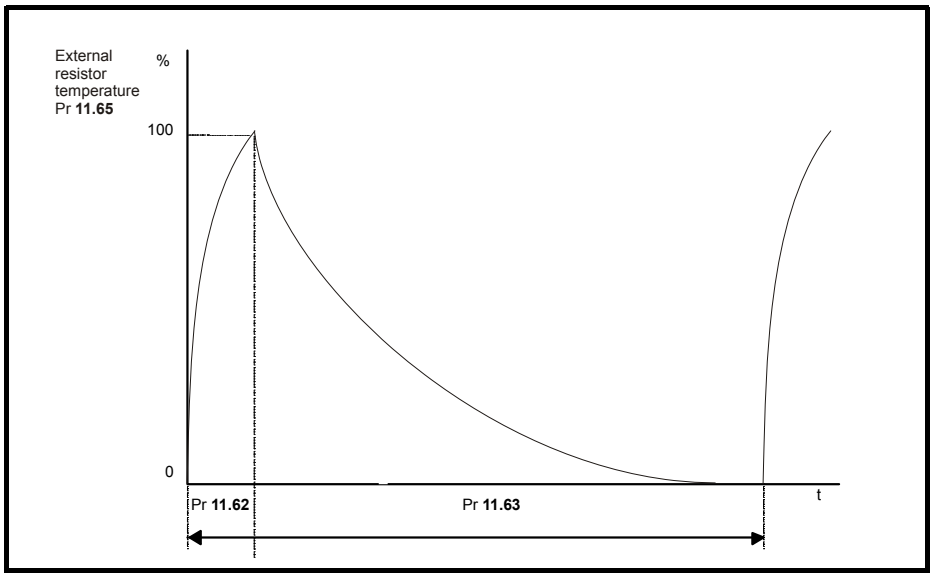

Assuming that the full power discharge time is much shorter than the full power discharge period (which is normally the case) the values for Pr **11.60** and Pr **11.61** can be calculated as follows:

$$\mathbf{Power} = \frac{(\mathbf{SuppressorVolts})^2}{\mathbf{Pr11.64}}$$

Full power discharge time (Pr **11.62**) $\mathbf{T_{on}} = \frac{\mathbf{Energy}}{\mathbf{Power}}$

Where Energy is the total energy that can be absorbed by the external resistor when its initial temperature is ambient temperature.

$$\Rightarrow \mathbf{DischargeTime}(\mathbf{Pr11.62})\mathbf{T_{on}} = \mathbf{Energy} \times \left|\frac{\mathbf{Pr\ 11.64}}{\mathbf{SuppesorVolts}}\right|$$

If the cycle shown in the diagram above is followed repeatedly, where the external resistor is heated to its maximum temperature and then cools to ambient:

The average power in the resistor

$$\mathbf{P_{average}} = \mathbf{DischargePower} \times \frac{\mathbf{T_{on}}}{\mathbf{T_p}} = \mathbf{DischargePower} \times \frac{\mathbf{Pr\ 11.62}}{\mathbf{Pr\ 11.63}}$$

where Tp is the full power discharge period (Pr **11.63**)

$$\Rightarrow \mathbf{DischargePower} = \frac{\mathbf{Energy}}{\mathbf{T_{on}}|\mathbf{Pr11.62}|}$$

$$\Rightarrow \mathbf{AveragePower} = \frac{\mathbf{Energy}}{\mathbf{T_p}(\mathbf{Pr11.63})}$$

$$\Rightarrow \mathbf{DischargePower}|\mathbf{Pr11.63}|\mathbf{T_p} = \frac{\mathbf{Energy}}{\mathbf{AveragePower}}$$

The temperature of the external resistor is monitored by the temperature accumulators (Pr **11.63**). When parameter Pr **11.62** reaches 100 % the drive will trip ‘O.ht3’.

11.64	**External discharge resistance**															
Coding	Bit	SP	FI	DE	TE	VM	DP	ND	RA	NC	NV	PT	US	RW	BU	PS
													1	1	1	
Range	0 to 9999 Ω															
Default	0															
Update rate	Background read															

This parameter defines the external resistance installed to the drive by the user. This parameter is used in calculating the power dissipated and modelling the temperature of the resistor.

NOTE

If this is not entered correctly the power dissipated, and therefore the thermal protection model for the resistor will be incorrect. This could lead to the resistor being operated beyond its thermal limits.

11.65	**External resistor temperature**															
Coding	Bit	SP	FI	DE	TE	VM	DP	ND	RA	NC	NV	PT	US	RW	BU	PS
								1		1		1			1	
Range	0 to 100 %															
Update rate	Background write															

This parameter displays the externally installed resistor temperature calculated by the protection model in terms of percentage.

11.66	**Suppressor voltage**															
Coding	Bit	SP	FI	DE	TE	VM	DP	ND	RA	NC	NV	PT	US	RW	BU	PS
			1					1		1		1			1	
Range	0 to 2000 V															
Update rate	Background write															

This is the voltage measured on the bucket suppressor. If this voltage rises this indicates that there are voltage transients present on the supply and an external resistor may be required to limit the voltage.

5.13 Menu 12: Threshold detectors, variable selectors and brake control function

5.13.1 Threshold detectors function

Menu 12 includes two threshold detectors which produce logic signals depending on the level of a variable value with respect to a threshold, and two variable selectors which allow two input parameters to be selected or combined to produce a variable output. One menu 9 or one menu 12 function is executed every 4 ms. Therefore the sample time of these functions is 4 ms x number of menu 9 and 12 functions active. A function is active if one or more sources are routed to a valid parameter.

Figure 5-29 Menu 12 logic diagram (Threshold detectors)

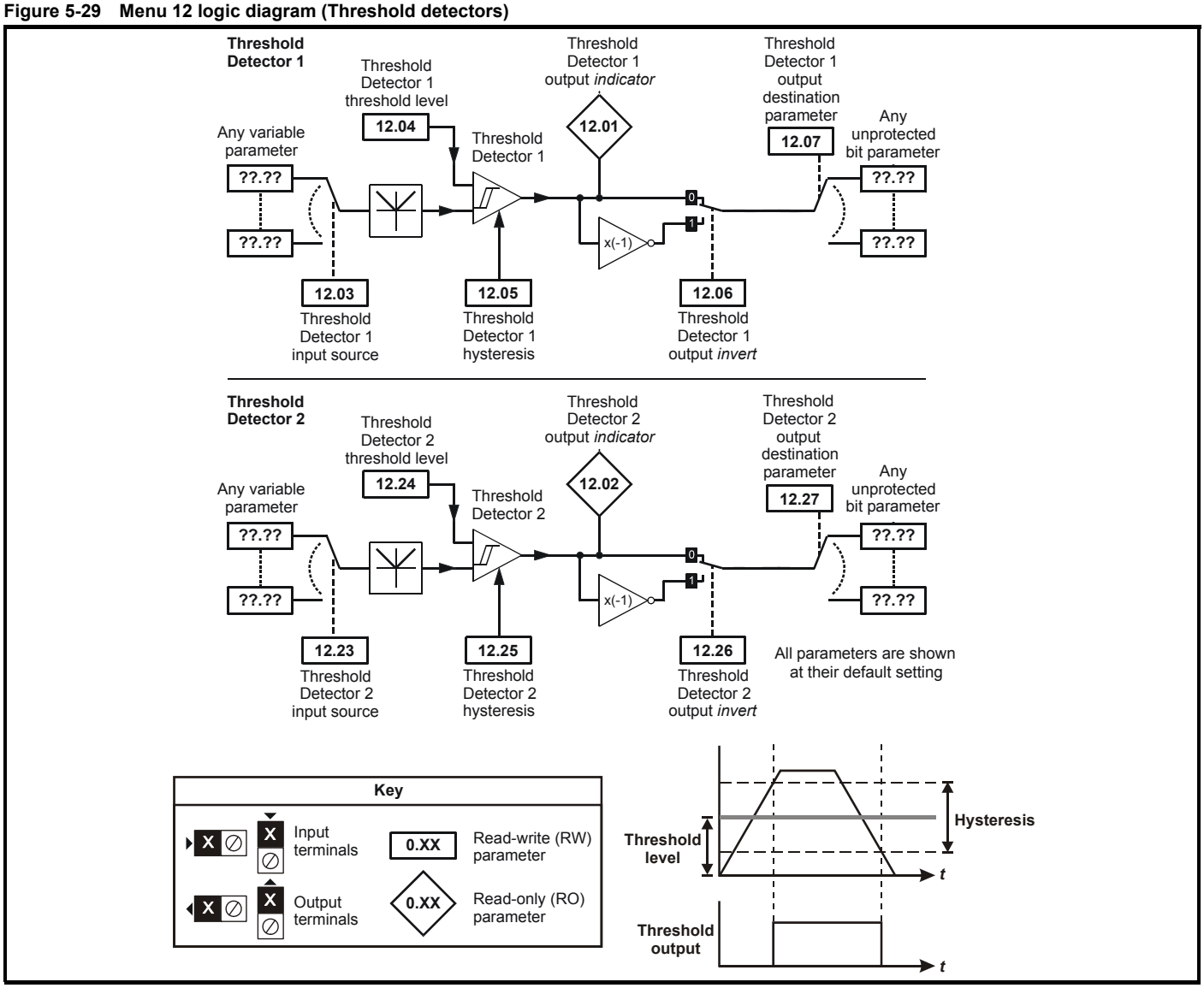

12.01	Threshold detector 1 output															
12.02	Threshold detector 2 output															
Coding	Bit	SP	FI	DE	Txt	VM	DP	ND	RA	NC	NV	PT	US	RW	BU	PS
	1							1		1		1				
Update rate	4 ms x number of menu 9 or 12 functions active write															

12.03	Threshold detector 1 source															
12.23	Threshold detector 2 source															
Coding	Bit	SP	FI	DE	Txt	VM	DP	ND	RA	NC	NV	PT	US	RW	BU	PS
							2					1	1	1	1	
Range	Pr **0.00** to Pr **22.99**															
Default	Pr **0.00**															
Update rate	Read on reset															

12.04	**Threshold detector 1 level**															
12.24	**Threshold detector 2 level**															
Coding	Bit	SP	FI	DE	Txt	VM	DP	ND	RA	NC	NV	PT	US	RW	BU	PS
							2						1	1	1	
Range	0.00 to 100.00 %															
Default	0.00															
Update rate	4 ms x number of menu 9 or 12 functions active read															

12.05	**Threshold detector 1 hysteresis**															
12.25	**Threshold detector 2 hysteresis**															
Coding	Bit	SP	FI	DE	Txt	VM	DP	ND	RA	NC	NV	PT	US	RW	BU	PS
							2						1	1	1	
Range	0.00 to 25.00 %															
Default	0.00															
Update rate	4 ms x number of menu 9 or 12 functions active read															

12.06	**Threshold detector 1 output invert**															
12.26	**Threshold detector 2 output invert**															
Coding	Bit	SP	FI	DE	Txt	VM	DP	ND	RA	NC	NV	PT	US	RW	BU	PS
	1												1	1		
Default	0															
Update rate	4 ms x number of menu 9 or 12 functions active read															

12.07	**Threshold detector 1 destination**															
12.27	**Threshold detector 2 destination**															
Coding	Bit	SP	FI	DE	Txt	VM	DP	ND	RA	NC	NV	PT	US	RW	BU	PS
				1			2					1	1	1	1	
Range	Pr **0.00** to Pr **22.99**															
Default	Pr **0.00**															
Update rate	Read on reset															

The threshold detector compares the absolute value of the source input value (defined by Pr **12.03**, Pr **12.23**), converted to a percentage of its maximum value, with the threshold level (Pr **12.04**, Pr **12.24**). If the value is greater or equal to the threshold plus half the hysteresis band (Pr **12.05**, Pr **12.25**) the output becomes active, or if the value is less than the threshold minus half the hysteresis band the output becomes inactive. The output may be inverted if required by setting the invert flag (Pr **12.06**, Pr **12.26**). The result is routed to the destination (defined by Pr **12.07**, Pr **12.27**).

5.13.2 Variable selectors function

Figure 5-30 Menu 12 Logic diagram (Variable selectors)

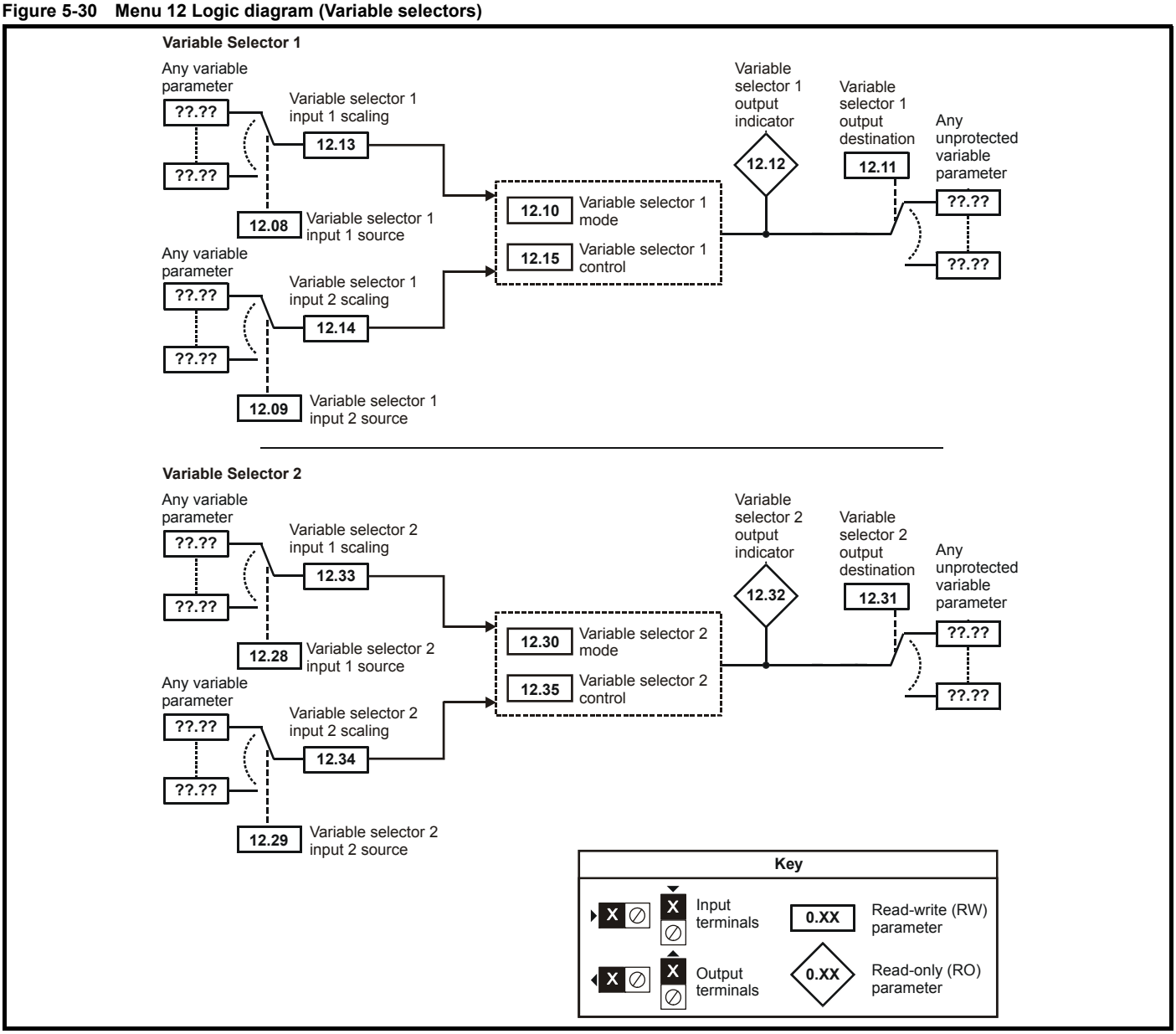

12.08	Variable selector 1 source 1															
12.28	Variable selector 2 source 1															
Coding	Bit	SP	FI	DE	Txt	VM	DP	ND	RA	NC	NV	PT	US	RW	BU	PS
							2					1	1	1	1	
Range	Pr **0.00** to Pr **22.99**															
Default	Pr **0.00**															
Update rate	Read on reset															

12.09	Variable selector 1 source 2															
12.29	Variable selector 2 source 2															
Coding	Bit	SP	FI	DE	Txt	VM	DP	ND	RA	NC	NV	PT	US	RW	BU	PS
							2					1	1	1	1	
Range	Pr **0.00** to Pr **22.99**															
Default	Pr **0.00**															
Update rate	Read on reset															

12.10	**Variable selector 1 mode**															
12.30	**Variable selector 2 mode**															
Coding	Bit	SP	FI	DE	Txt	VM	DP	ND	RA	NC	NV	PT	US	RW	BU	PS
													1	1	1	
Range	0 to 10															
Default	0															
Update rate	4 ms x number of menu 9 or 12 functions active read															

12.11	**Variable selector 1 destination**															
12.31	**Variable selector 2 destination**															
Coding	Bit	SP	FI	DE	Txt	VM	DP	ND	RA	NC	NV	PT	US	RW	BU	PS
				1			2					1	1	1	1	
Range	Pr **0.00** to Pr **22.99**															
Default	Pr **0.00**															
Update rate	Read on reset															

12.12	**Variable selector 1 output**															
12.32	**Variable selector 2 output**															
Coding	Bit	SP	FI	DE	Txt	VM	DP	ND	RA	NC	NV	PT	US	RW	BU	PS
							2	1		1		1				
Range	±100.00 %															
Update rate	4 ms x number of menu 9 or 12 functions active write															

12.13	**Variable selector 1 source 1 scaling**															
12.33	**Variable selector 2 source 1 scaling**															
Coding	Bit	SP	FI	DE	Txt	VM	DP	ND	RA	NC	NV	PT	US	RW	BU	PS
							3						1	1		
Range	±4.000															
Default	1.000															
Update rate	4 ms x number of menu 9 or 12 functions active read															

12.14	**Variable selector 1 source 2 scaling**															
12.34	**Variable selector 2 source 2 scaling**															
Coding	Bit	SP	FI	DE	Txt	VM	DP	ND	RA	NC	NV	PT	US	RW	BU	PS
							3						1	1		
Range	±4.000															
Default	1.000															
Update rate	4 ms x number of menu 9 or 12 functions active read															

12.15	Variable selector 1 control															
12.35	Variable selector 2 control															
Coding	Bit	SP	FI	DE	Txt	VM	DP	ND	RA	NC	NV	PT	US	RW	BU	PS
							2						1	1	1	
Range	0.00 to 100.00															
Default	0.00															
Update rate	Background															

The variable selectors allow two source values (defined by Pr **12.08**, Pr **12.28** and Pr **12.09**, Pr **12.29**) to be combined as defined by the mode (Pr **12.10**, Pr **12.30**) to produce an output (Pr **12.12**, Pr **12.32**) which can be routed to the destination parameter (defined by Pr **12.11**, Pr **12.31**). The actions of the variable selector are defined by the mode parameter as given below. If the mode parameter is changed or the variable selector is disabled because neither source is routed to a valid parameter all the internal state variables (i.e. filter accumulator, etc.) within the selector are reset. When the Sectional control mode is selected the function is also reset, and the output is held at zero, when the control (Pr **12.15** or Pr **12.35**) is zero. It is active when the control has a non-zero value.

Mode value	Action	Result
0	Select input 1	output = input1
1	Select input 2	output = input2
2	Add	output = input1 + input2
3	Subtract	output = input1 - input 2
4	Multiply	output = (input1 x input2) / 100.0
5	Divide	output = (input1 x 100.0) / input2
6	filter	output = input1 / ((control param)s + 1)
7	Linear ramp	output = input1 via a ramp with a ramp time of (control param) seconds from 0 to 100 %
8	Modulus	output = | input1 |
9	Powers	control = 0.02: output = input1^2 / 100.0 control = 0.03: output = input1^3 / 100.0^2 control has any other value: output = input1
10	Sectional control	control = 0.00: disabled, accumulator reset and output zero control <> 0.00: output as defined below

Sectional control

The sectional control function is intended to apply scaling and a speed offset to a 16 bit position value to generate a new 16 bit position value. The output can be used as an input to the position controller (menu 13) or to generate an encoder simulation output via the SM-Universal encoder plus module. This function can be selected for either variable selector, but the description below relates to variable selector 1.

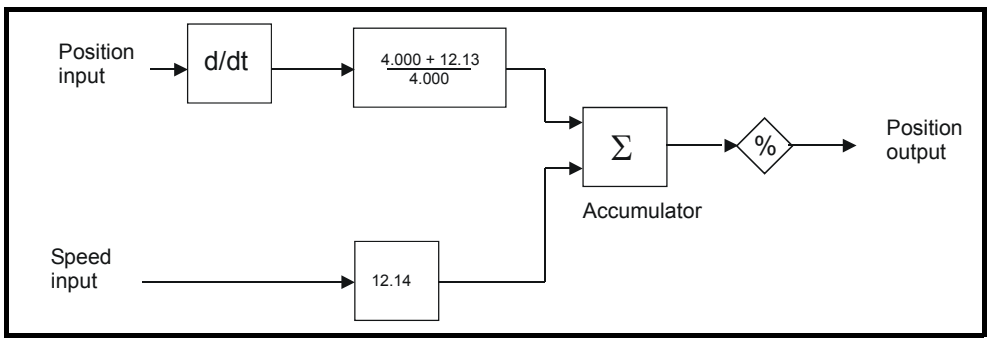

The position input can be derived from any parameter, however it is intended to be used with a position value that has a range from 0 to 65535. The input is scaled so that as Pr **12.13** is varied between -4.000 and 4.000 the proportion of the input position change added to the accumulator varies from 0.000 to 2.000 (i.e. the change of position input value is added without scaling if Pr **12.13** is 0.000). The remainder from the scaling division is stored and then added at the next sample to maintain an exact ratio between the position input and the position output, provided the speed input is zero. The controller only takes the change of position from the input source parameter, and not the absolute value, so that when the controller is first made active the output does not jump to the source position, but only moves with any changes of source position after that point in time.

The range of the output of the accumulator is 0.00 % and 100.00 %. Unlike other functions the value is not simply limited, but rolls under or over respectively. Although the output destination can be any parameter it is intended to be used with a position value that has a range from 0 to 65535.

The speed input defines a speed offset with a resolution of 0.1 rpm. Full scale of the source parameter corresponds to 1000.0 rpm. Scaling may be applied using Pr **12.14** to give a full scale value of 4000.0 rpm. The speed input is added to the accumulator to move the output position forwards or backwards with respect to the position input.

The sample time for this function is 4 ms x number of menu 9 and 12 functions active. Extending the sample time does not cause any overflow errors within the function however, care must be taken to ensure that the input or output positions do not change by more than half a revolution within the sample time, i.e for a sample time of 4 ms the input or output speed should not exceed 7500 rpm, for a sample time of 8 ms the speed should not exceed 3750 rpm, etc. If the output of this function is to supply a reference to the position controller in menu 13 it must be the only user function in menu 9 or 12 enabled. **If another function is enabled the input to the position controller will only change every 8 ms (i.e. every 2 samples of the position controller) and the speed reference applied to the drive could be very noisy.**

The following diagram shows how the variable selector in Sectional control mode can be used to provide a position reference for the drive and act as a source for encoder simulation to give the position reference for the next drive in the system.

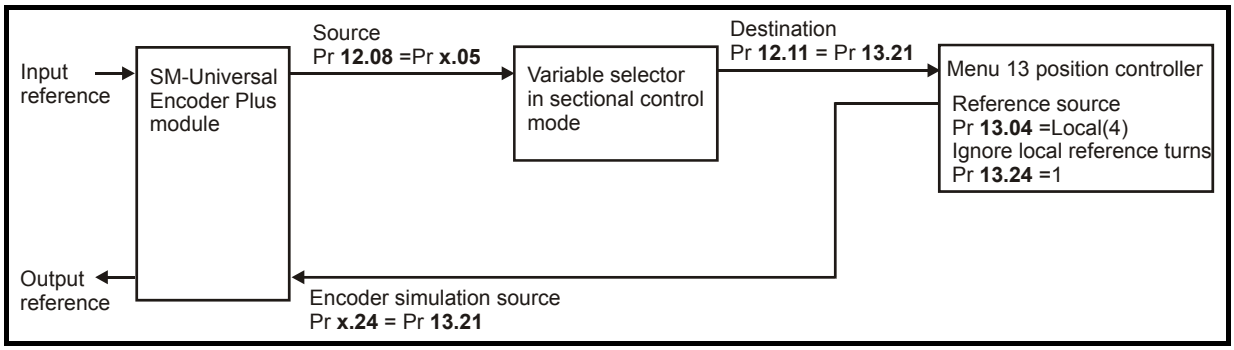

The input reference is provided by the previous drive in the system via the SM-Universal Encoder Plus module and is used as the position source (Pr **12.08**) for the variable selector. The destination of the variable selector is the local position reference for the menu 13 position controller (Pr **13.21**). Pr **13.21** counts up or down based on the delta position from the variable selector and rolls over or under at 65535 or 0. If the controller is set up to ignore the local reference turns then Pr **13.21** can be used as the position controller reference.

If Pr **13.21** is also used as the encoder simulation source the local reference can also be used to give the reference for the next drive in the system. With this arrangement a ratio is provided between the input reference and output reference within the variable selector. An addition ratio can be provided within the position controller between the position in Pr **13.21** and the position reference used by the position controller. The variable selector speed reference can be used to move the position reference forwards or backwards with respect to the input reference.

5.13.3 Brake control function

The brake control function can be used to control an electro-mechanical brake via the drive digital I/O.

12.40	**Brake release**															
Coding	Bit	SP	FI	DE	Txt	VM	DP	ND	RA	NC	NV	PT	US	RW	BU	PS
	1							1		1		1				
Update rate	Background read															

This parameter should be used as a source for a digital output to control an electro-mechanical brake. This parameter is one to release the brake and zero to apply the brake. Digital I/O can be automatically configured to use this parameter as a source (see Pr **12.41**).

12.41	**Brake controller enable**															
Coding	Bit	SP	FI	DE	Txt	VM	DP	ND	RA	NC	NV	PT	US	RW	BU	PS
					1								1	1	1	
Range	0 to 3															
Default	0															
Update rate	Read on drive reset															

0 = dis
The brake controller is disabled and no other drive parameters are affected by the brake controller. When this parameter is changed from a non-zero value to zero the following parameters are set to zero: Pr **2.03**, Pr **6.08**, Pr **13.04** and Pr **13.10** (if Pr **12.49** = 1).

1 = rel
The brake controller is enabled with I/O set up to control the brake via the relay output T51/T52. Drive OK is re-routed to digital I/O 2 (T25).

2 = d IO
The brake controller is enabled with I/O set up to control the brake via digital I/O 2 (T25).

3 = User
The brake controller is enabled, but no parameters are set to select the brake output.

The following tables show the automatic parameter changes that occur to set up digital I/O2 (T25) and the relay output (T51/52) after drive reset when Pr **12.41** has been changed. The changes are done in two stages: the first stage restores the I/O used as defined by the initial setting of Pr **12.41** and the second stage sets up the I/O as defined by the new setting of Pr **12.41**.

Old value of Pr 12.41	New value of Pr 12.41	Pr 8.12	Pr 8.22	Pr 8.32	Pr 8.17	Pr 8.27
		Drive OK output			Brake release output	
Any	1	0	Pr **10.01**	1	0	Pr **12.40**
		Brake release output				
Not 1	2	0	Pr **12.40**	1	No change	No change
		Brake release output			Drive OK output	
1	2	0	Pr **12.40**	1	0	Pr **10.01**
		Not stop			Drive OK output	
1	0 or 3	0	Pr **6.39**	0	0	Pr **10.01**
		Reset				
2	0 or 3	0	Pr **10.33**	0	No change	No change

WARNING The brake control functions are provided to allow well co-ordinated operation of an external brake with the drive. While both hardware and software are designed to high standards of quality and robustness, they are not intended for use as safety functions, i.e. where a fault or failure would result in a risk of injury. In any application where the incorrect operation of the brake release mechanism could result in injury, independent protection devices of proven integrity must also be incorporated.

WARNING The control terminal relay can be selected as an output to release a brake. If a drive is set up in this manner and a drive replacement takes place, prior to programming the drive on initial power up, the brake may be released.When drive terminals are programmed to non default settings the result of incorrect or delayed programming must be considered. The use of a SMARTCARD in boot mode or an SM-Applications module can ensure drive parameters are immediately programmed to avoid this situation.

Figure 5-31 Menu 12 Brake control function

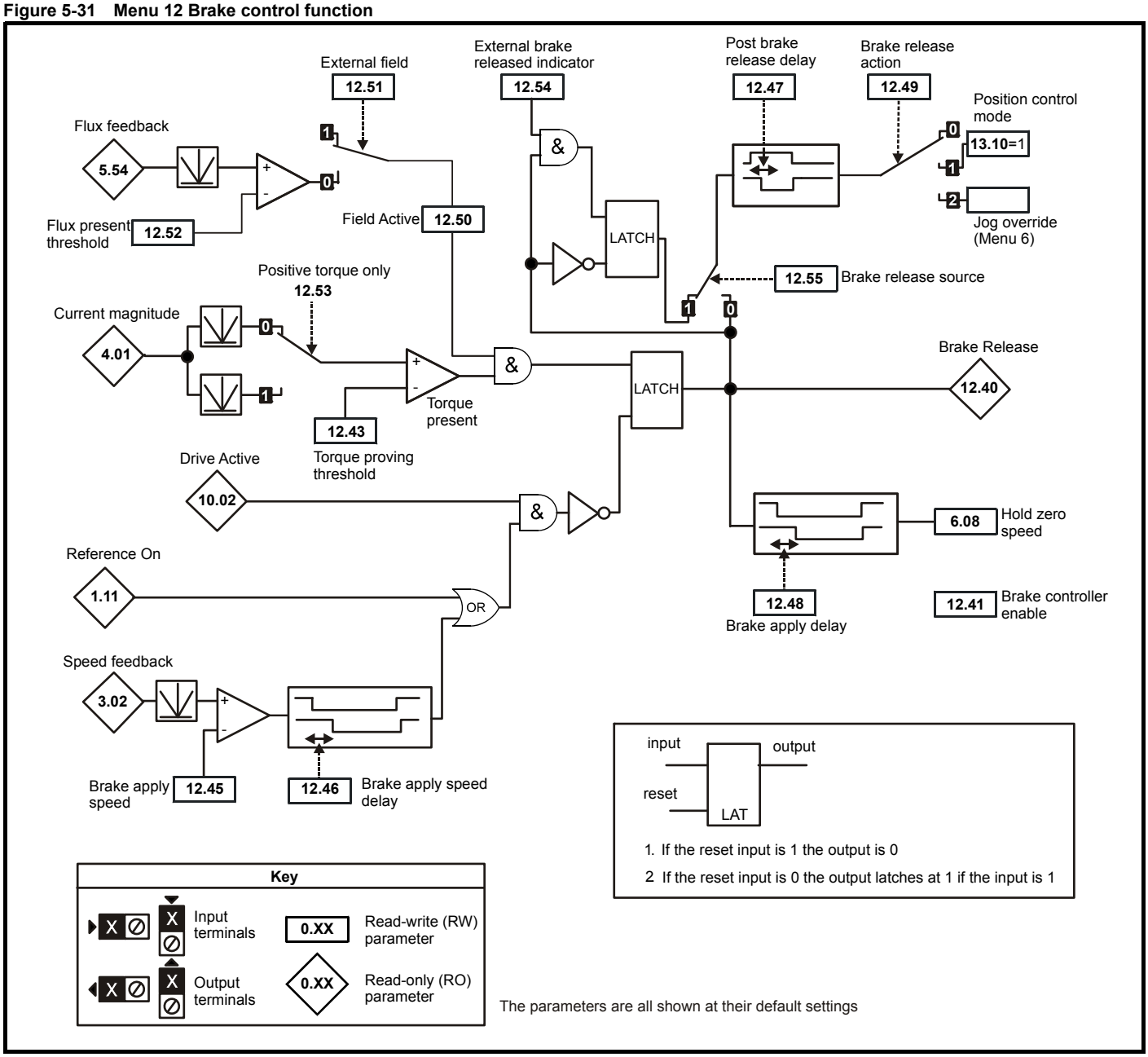

Figure 5-32 Brake sequence

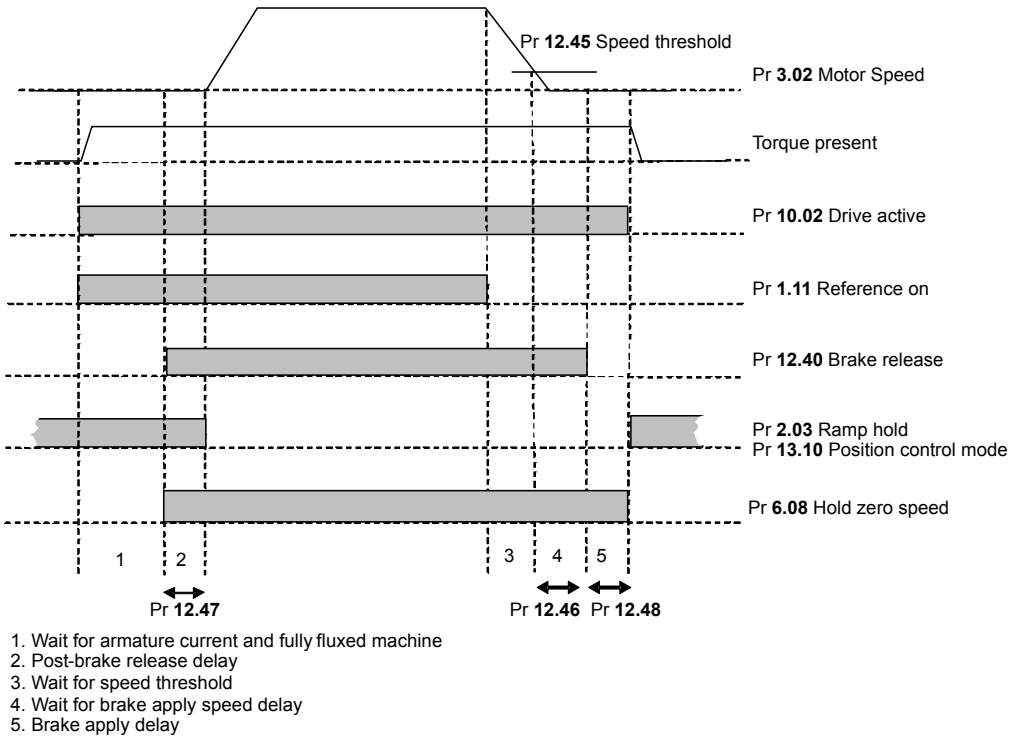

1. Wait for armature current and fully fluxed machine
2. Post-brake release delay
3. Wait for speed threshold
4. Wait for brake apply speed delay
5. Brake apply delay

12.43	Torque proving threshold															
Coding	Bit	SP	FI	DE	Txt	VM	DP	ND	RA	NC	NV	PT	US	RW	BU	PS
													1	1	1	
Range	0 to 150 %															
Default	10															
Update rate	Background read															

This parameter should be set to a level that is required to hold a load when the brake is released.

12.45	Brake apply speed															
Coding	Bit	SP	FI	DE	Txt	VM	DP	ND	RA	NC	NV	PT	US	RW	BU	PS
													1	1	1	
Range	0 to 200 rpm															
Default	5 rpm															
Update rate	Background read															

When stopping, the drive reference can be removed (i.e. Pr **1.11** = 0), but the brake will remain energized (open), until the motor has remained at a speed below the brake apply speed for the delay defined by Pr **12.46**. The delay prevents rapid activation and de-activation of the brake when fine control of a motor is required close to zero speed.

12.46	Brake apply speed delay															
Coding	Bit	SP	FI	DE	Txt	VM	DP	ND	RA	NC	NV	PT	US	RW	BU	PS
							1						1	1		
Range	0.0 to 25.0 s															
Default	1.0 s															
Update rate	Background read															

See Pr **12.45 for more information**.

12.47	**Post-brake release delay**															
Coding	Bit	SP	FI	DE	Txt	VM	DP	ND	RA	NC	NV	PT	US	RW	BU	PS
							1						1	1	1	
Range	0.0 to 25.0 s															
Default	1.0 s															
Update rate	Background read															

The post-brake release delay is used to allow for the brake release time. During this period the speed reference is held constant at zero, so that there is no sudden increase in motor speed when the brake actually releases.

12.48	**Brake apply delay**															
Coding	Bit	SP	FI	DE	Txt	VM	DP	ND	RA	NC	NV	PT	US	RW	BU	PS
							1						1	1		
Range	0.0 to 25.0 s															
Default	1.0 s															
Update rate	Background read															

The brake apply delay is used to allow for the brake application time. During this period the Hold zero speed parameter (Pr **6.08**) is one, and so the drive is enabled with zero speed reference. This ensures that the motor remains stationary while the brake is being applied.

12.49	**Brake release action**															
Coding	Bit	SP	FI	DE	Txt	VM	DP	ND	RA	NC	NV	PT	US	RW	BU	PS
													1	1	1	
Range	0 to 2															
Default	0															
Update rate	Background read															

This parameter can be used to change the operating mode of the drive when the brake is released. The selected change in operating mode takes place after the programmed post brake release delay and after the programmed brake applied delay. For the default value of 0, no action taken.

1 Position controller activated.

When this parameter is set to one, the position controller (see menu 13) is enabled (Pr **13.10** = 1) and the local position reference source is selected (Pr **13.04** = 4 (LocAL)) during the period when the brake is released until the end of the delay, and again after the brake is applied ready for the next start. Provided the default non-absolute mode is selected, the position controller can help to limit the movement of the motor when the brake is released. When parameter Pr **12.49** is changed from one to zero, Pr **13.04** and Pr **13.10** are automatically set to zero.

2 Jog override

When this parameter is set to two, the jog inputs to the sequencer take priority over the run inputs during the period when the brake is released until the end of the delay, and again after the brake is applied ready for the next start. This allows the user to use the jog reference to pick up the load and then switch to the selected run reference when the brake is off.

12.50	**Field active**															
Coding	Bit	SP	FI	DE	Txt	VM	DP	ND	RA	NC	NV	PT	US	RW	BU	PS
	1												1	1		
Default	0															
Update rate	Background write/read															

When Pr **12.51** is 0 this parameter is 0 when the absolute value of the field flux (Pr **5.54**) is below 80 % and 1 when the absolute value of the field flux (Pr **5.54**) is above 80 %.

When Pr **12.51** is a 1 the internal field controller does not control this parameter. An external field controller can then be used to control Pr **12.50**.

12.51	**External field control**															
Coding	Bit	SP	FI	DE	Txt	VM	DP	ND	RA	NC	NV	PT	US	RW	BU	PS
	1												1	1		
Default	0															
Update rate	Background read															

When Pr **12.51** = 0, Pr **12.50** is controlled by the internal field controller.
When Pr **12.51** = 1, Pr **12.50** is controlled by an external field controller.

12.52	Flux present threshold															
Coding	Bit	SP	FI	DE	Txt	VM	DP	ND	RA	NC	NV	PT	US	RW	BU	PS
													1	1	1	
Range	0 to 100 %															
Default	80 %															
Update rate	Background read															

This parameter should be set to the level of flux required before the torque proving latch can be set.

12.53	Positive Torque proving only															
Coding	Bit	SP	FI	DE	Txt	VM	DP	ND	RA	NC	NV	PT	US	RW	BU	PS
	1												1	1		
Default	0															
Update rate	Background read															

When this parameter is set to 1, the torque present signal is only given when the armature current is above the threshold in the positive direction.

12.54	External brake released indicator															
Coding	Bit	SP	FI	DE	Txt	VM	DP	ND	RA	NC	NV	PT	US	RW	BU	PS
	1									1				1		
Default	0															
Update rate	Background read															

This parameter is provided for the case where users wish to have positive feedback that the brake is released. This could be done using a brake release limit switch, or an auxiliary contact on the brake contactor. A digital input needs to be routed to this parameter to monitor the brake state and Pr **12.55** needs to be set to enable this feature.

12.55	Brake release action source															
Coding	Bit	SP	FI	DE	Txt	VM	DP	ND	RA	NC	NV	PT	US	RW	BU	PS
	1												1	1		
Default	0															
Update rate	Background read															

By default, the brake release action defined by Pr **12.49** is triggered by the brake release logic (Pr **12.40**). When this parameter is set to 1, the brake release action is triggered by an external feedback (Pr **12.54**).

5.14 Menu 13: Position control

Menu 13 provides a position control system for the drive. The position reference can be taken from the drive encoder, from a position feedback module or from a local reference defined in this menu. The reference includes a relative jog function that can be used to advance or retard the position reference at a defined speed and a ratio that can scale the reference. The feedback position can be taken from the drive encoder or from a position feedback module. As well as giving position control the controller can provide shaft orientation within one revolution in conjunction with the drive sequencer (see Menu 6). The sample time for the position controller is 4 ms and the output is supplied to the speed reference every 4 ms.

Figure 5-33 Menu 13 logic diagram

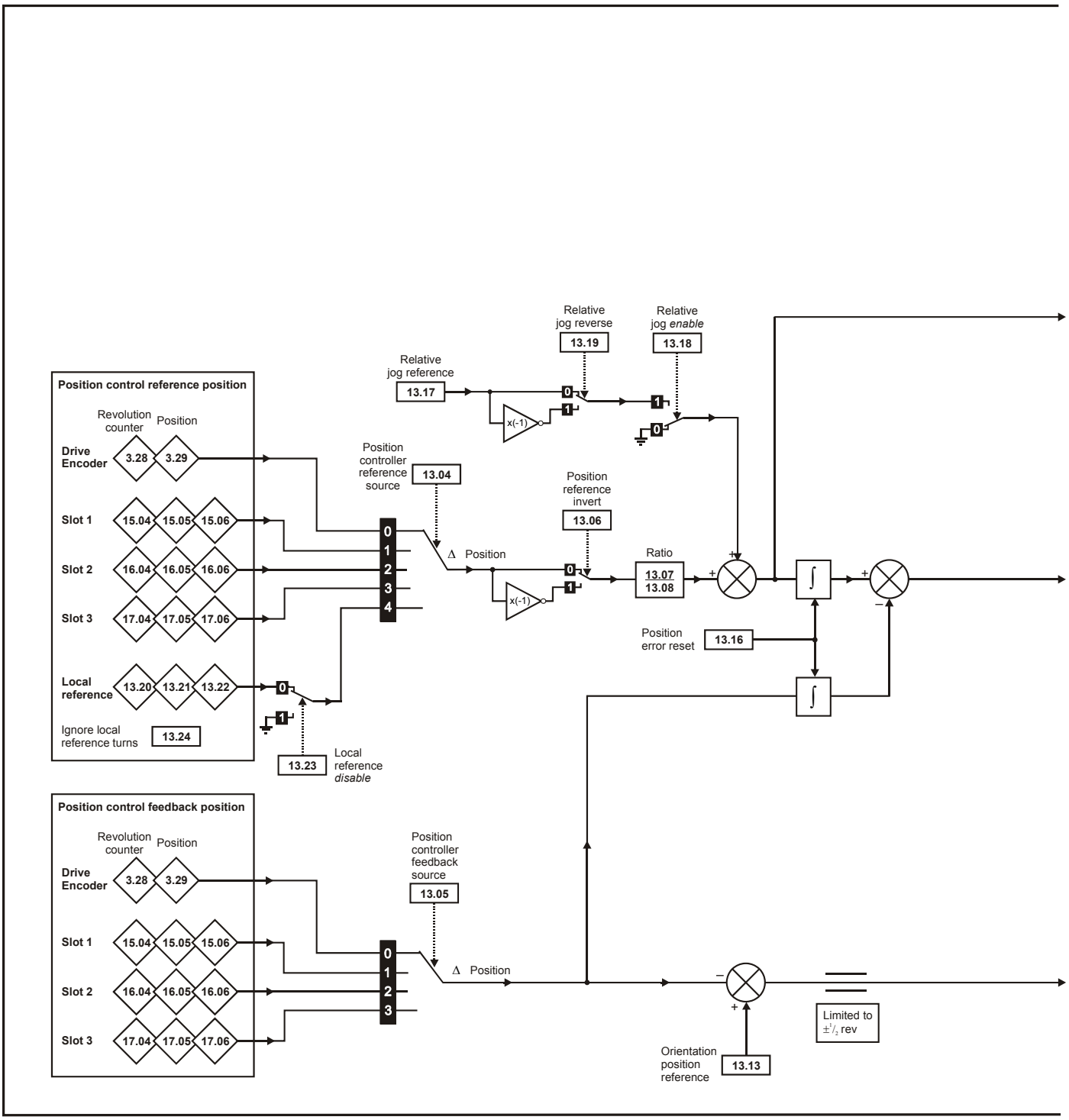

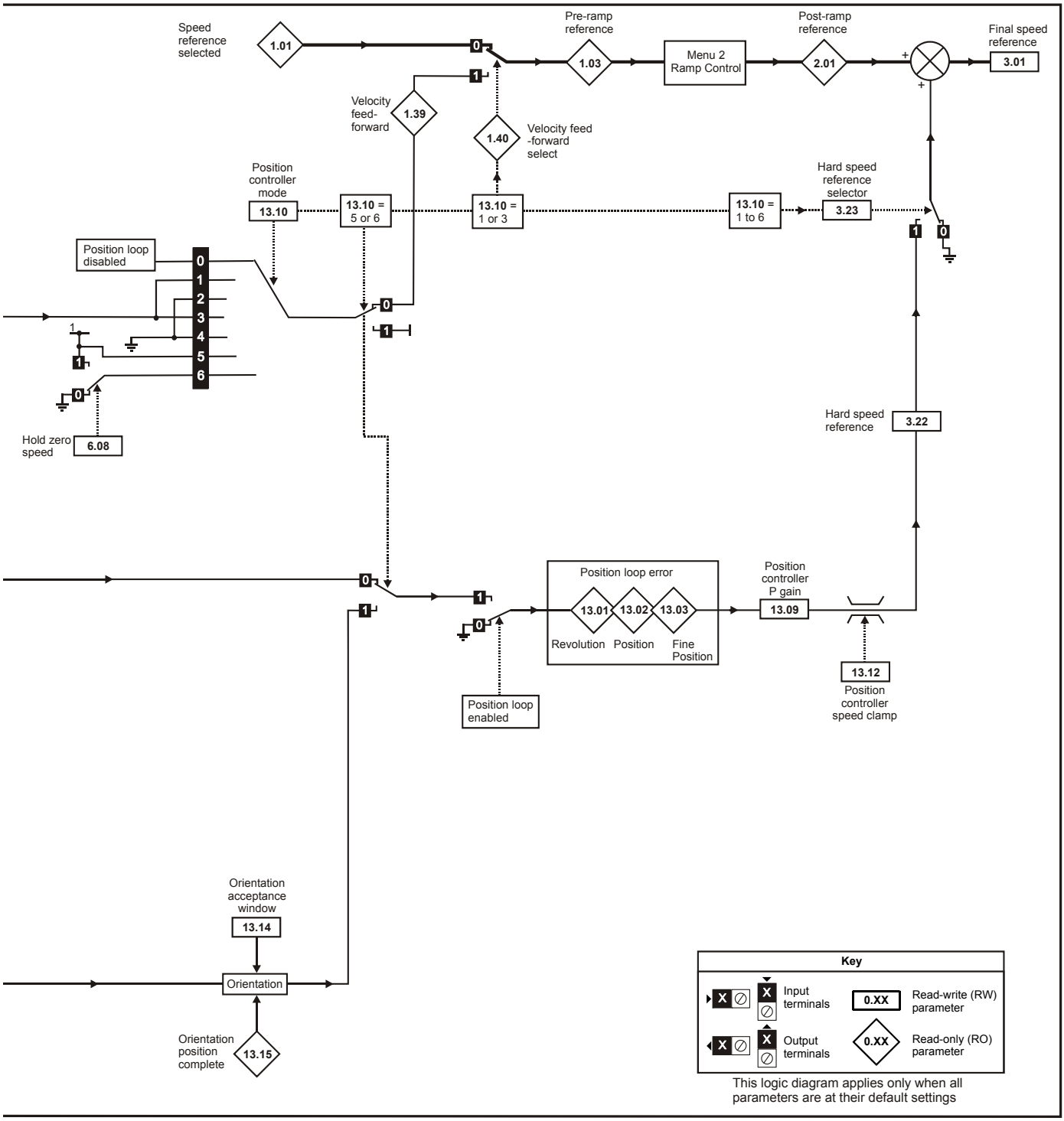
Speed reference selected
1.01
Pre-ramp reference
1.03
Menu 2 Ramp Control
Post-ramp reference
2.01
Final speed reference
3.01
Velocity feed-forward
1.39
1.40
Velocity feed -forward select
Position controller mode
13.10
13.10 = 5 or 6
13.10 = 1 or 3
13.10 = 1 to 6
Hard speed reference selector
3.23
Position loop disabled
Hold zero speed
6.08
Hard speed reference
3.22
Position loop error
13.01
13.02
13.03
Revolution
Position
Fine Position
Position controller P gain
13.09
13.12
Position controller speed clamp
Position loop enabled
Orientation acceptance window
13.14
Orientation
Orientation position complete
13.15
Key
Input terminals
Output terminals
0.XX
Read-write (RW) parameter
Read-only (RO) parameter
This logic diagram applies only when all parameters are at their default settings

13.01	Revolutions error															
Coding	Bit	SP	FI	DE	Txt	VM	DP	ND	RA	NC	NV	PT	US	RW	BU	PS
								1		1		1				
Range	-32,768 to 32,767															
Update rate	4 ms write															

13.02	Position error															
Coding	Bit	SP	FI	DE	Txt	VM	DP	ND	RA	NC	NV	PT	US	RW	BU	PS
								1		1		1				
Range	-32,768 to 32,767															
Update rate	4 ms write															

13.03	Fine position error															
Coding	Bit	SP	FI	DE	Txt	VM	DP	ND	RA	NC	NV	PT	US	RW	BU	PS
								1		1		1				
Range	-32,768 to 32,767															
Update rate	4 ms write															

For normal position control the position changes from the reference and the feedback are accumulated in an integrator during each sample. The integrator is large enough to guarantee that the position controller will operate with a position error within the range -32,768 revolutions to +32,767 revolutions before rolling over. The position error is displayed in Pr **13.01**, Pr **13.02** and Pr **13.03**. Pr **13.01** shows the turns error, Pr **13.02** shows the error within a revolution in $1/2^{16}$ counts per revolution units and Pr **13.03** shows the fine position error in $1/2^{32}$ counts per revolution units. These values are both positive and negative and so they can be used to show the following error with different levels of resolution.

For orientation mode the error between the orientation position and the position feedback source is shown in Pr **13.02**.

13.04	Position controller reference source															
Coding	Bit	SP	FI	DE	Txt	VM	DP	ND	RA	NC	NV	PT	US	RW	BU	PS
					1								1	1	1	
Range	0 to 4															
Default	0															
Update rate	Background read															

13.05	Position controller feedback source															
Coding	Bit	SP	FI	DE	Txt	VM	DP	ND	RA	NC	NV	PT	US	RW	BU	PS
					1								1	1	1	
Range	0 to 3															
Default	0															
Update rate	Background read															

Source parameter	Source
0 (drv)	Drive encoder
1 (slot1)	Slot 1
2 (slot2)	Slot 2
3 (slot3)	Slot 3
4 (locAI)	Local reference

The reference and feedback positions can be taken from the drive encoder or a position feedback Solutions Module in one of the Solutions Module slots. The reference can also be taken from the local reference parameters. If the reference and feedback sources are the same the position controller cannot be enabled. If a Solutions Module slot is selected as a source, but the module is not a position feedback category Solutions Module the position controller cannot be enabled.

13.06	**Position reference invert**															
Coding	Bit	SP	FI	DE	Txt	VM	DP	ND	RA	NC	NV	PT	US	RW	BU	PS
	1												1	1		
Default	0															
Update rate	Background read															

13.07	**Ratio numerator**															
Coding	Bit	SP	FI	DE	Txt	VM	DP	ND	RA	NC	NV	PT	US	RW	BU	PS
							3						1	1	1	
Range	0.000 to 4.000															
Default	1.000															
Update rate	Background read															

13.08	**Ratio denominator**															
Coding	Bit	SP	FI	DE	Txt	VM	DP	ND	RA	NC	NV	PT	US	RW	BU	PS
							3						1	1	1	
Range	0.000 to 1.000															
Default	1.000															
Update rate	Background read															

An exact ratio can be applied to the position reference with these two parameters. The ratio cannot be changed when the drive is enabled without causing abrupt changes of position. Although it is possible to set up ratios with a high gain or even with a denominator of zero, the drive limits the resultant gain of the ratio block to 4.000.

13.09	**Position controller P gain**															
Coding	Bit	SP	FI	DE	Txt	VM	DP	ND	RA	NC	NV	PT	US	RW	BU	PS
							2						1	1	1	
Range	0.00 to 100.00 rads $^{-1}$/rad															
Default	25.00															
Update rate	Background read															

The gain of the position controller is controlled with this parameter. The standard units within the drive for position are in 2^{32} counts per revolution and the standard units for speed are 0.1 rpm, however the position controller gain is given in rads^{-1}/rad. These units are consistent with units such as mms^{-1}/mm or ms^{-1}/m often used for linear control applications. An error of 1 radian (10430 counts in the position error (Pr **13.02**)) gives a speed reference of 1rads^{-1} (9.5 rpm) when this gain is 1.00.

13.10	**Position controller mode**															
Coding	Bit	SP	FI	DE	Txt	VM	DP	ND	RA	NC	NV	PT	US	RW	BU	PS
													1	1	1	
Range	0 to 6															
Default	0															
Update rate	Background read															

This parameter is used to set the position controller mode as shown in the following table.

Parameter value	**Mode**	**Feed forward active**
0	Position controller disabled	
1	Rigid position control	Yes
2	Rigid position control	
3	Non-rigid position control	Yes
4	Non-rigid position control	
5	Orientation on stop	
6	Orientation on stop and when drive enabled	

Rigid position control

In rigid position control the position error is always accumulated. This means that, if for example, the slave shaft is slowed down due to excessive load, the target position will eventually be recovered by running at a higher speed when the load is removed.

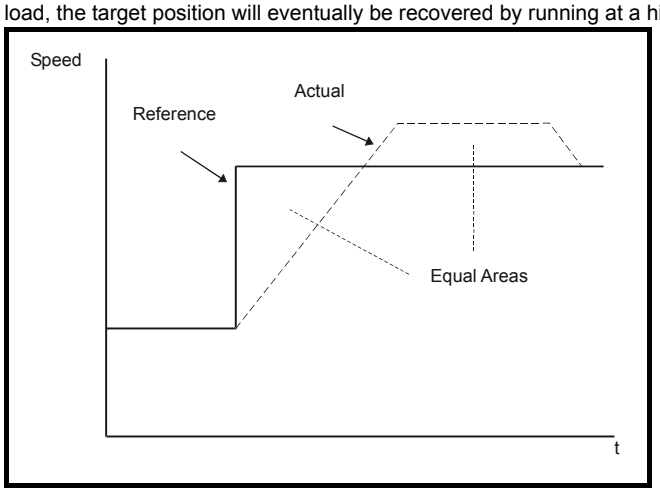

Non-rigid position control

In non-rigid position control the position loop is only active when the 'At Speed' condition is met (see Pr **3.06** on page 44). This allows slippage to occur while the speed error is high.

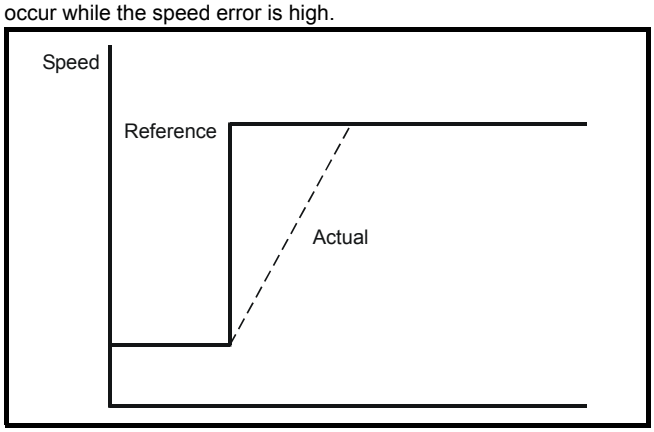

Velocity feed forward

The position controller can generate a velocity feed forward value from the speed of the reference encoder. The feed-forward value is passed to menu 1, and so ramps may be included if required. Because the position controller only has a proportional gain, it is necessary to use velocity feed-forward to prevent a constant position error that would be proportional to the speed of the reference position.

If for any reason the user wishes to provide the velocity feed forward from a source other than the reference position, the feed forward system can be made inactive, i.e. Pr **13.10** = 2 or 4. The external feed forward can be provided via Menu 1 from any of the speed references. However, if the feed forward level is not correct a constant position error will exist.

Relative jogging

If relative jogging is enabled the feedback position can be made to move relative to the reference position at the speed defined by Pr **13.17**.

Orientation

If Pr **13.10** is 5 the drive orientates the motor following a stop command. If hold zero speed is enabled (Pr **6.08** = 1) the drive remains in position control when orientation is complete and holds the orientation position. If hold zero speed is not enabled the drive is disabled when orientation is complete.

If Pr **13.10** is 6 the drive orientates the motor following a stop command and whenever the drive is enabled provided that hold zero speed is enabled (Pr **6.08** = 1). This ensures that the spindle is always held in the same position following the drive being enabled.

When orientating from a stop command the drive goes through the following sequence:

1. The motor is decelerated or accelerated to the speed limit programmed in Pr **13.12**, using ramps if these are enabled, in the direction the motor was previously running.
2. When the ramp output reaches the speed set in Pr **13.12**, ramps are disabled and the motor continues to rotate until the position is found to be close to the target position (i.e. within 1/32 of a revolution). At this point the speed demand is set to 0 and the position loop is closed.
3. When the position is within the window defined by Pr **13.14**, the orientation complete indication is given in Pr **13.15**.

The stop mode selected by Pr **6.01** has no effect if orientation is enabled.

13.11	**Absolute mode enable**															
Coding	Bit	SP	FI	DE	Txt	VM	DP	ND	RA	NC	NV	PT	US	RW	BU	PS
	1												1	1		
Default	0															
Update rate	Background read															

When this parameter is set to one and the position controller mode (Pr **13.10**) is 1 or 2, the position error integrator is loaded with the absolute position error defined by the position sources when the position controller is disabled. (The position controller is disabled under the following conditions: when the drive is in the inhibit, ready or tripped states; either the reference or feedback position sources from Solutions Modules are invalid; the position feedback is not correctly initialized (Pr **3.48** = 0); the position control mode (Pr **13.10**) is changed; this parameter (Pr **13.11**) is changed; or the position error reset (Pr **13.16**) is set to one.) Therefore when this parameter is one the position controller operates on the absolute position from the reference and feedback. If the feedback device is not absolute then the absolute position is the change of position since the drive was powered-up.

When this parameter is zero or the position control mode is not 1 or 2 the error integrator is loaded with zero when the position controller is disabled therefore the position controller operates on the relative position changes of the reference and feedback from the point when the position controller is re-enabled.

It should be noted that the value of this parameter does not affect the operation of the marker reset for any position source. If the marker position reset disable (Pr **3.31** for the drive encoder, or similar for Solutions Modules) is zero, the position controller takes the position source including the effect of the marker. When a marker event occurs the position and fine position are reset to zero, but the turns are not affected. If the marker position reset disable is one then the marker events have no effect on the position source used by the position controller.

13.12	**Position controller speed clamp**															
Coding	Bit	SP	FI	DE	Txt	VM	DP	ND	RA	NC	NV	PT	US	RW	BU	PS
													1	1	1	
Range	0 to 250															
Default	150															
Update rate	Background read															

This parameter limits the velocity correction applied by the position controller. This value is also used as the reference during orientation.

13.13	**Orientation position reference**															
Coding	Bit	SP	FI	DE	Txt	VM	DP	ND	RA	NC	NV	PT	US	RW	BU	PS
													1	1	1	
Range	0 to 65,535															
Default	0															
Update rate	Background read															

13.14	**Orientation acceptance window**															
Coding	Bit	SP	FI	DE	Txt	VM	DP	ND	RA	NC	NV	PT	US	RW	BU	PS
													1	1	1	
Range	0 to 4,096															
Default	256															
Update rate	Background read															

13.15	**Orientation position complete**															
Coding	Bit	SP	FI	DE	Txt	VM	DP	ND	RA	NC	NV	PT	US	RW	BU	PS
	1							1		1		1				
Update rate	4 ms write															

Pr **13.13** defines the position as a $1/2^{16}$ of a revolution for orientation. Pr **13.14** defines the position acceptance window either side of the position reference for orientation in $1/2^{16}$ of a revolution. When the position is within the window defined by Pr **13.14**, Pr **13.15** indicates orientation is complete.

13.16	Position error reset															
Coding	Bit	SP	FI	DE	Txt	VM	DP	ND	RA	NC	NV	PT	US	RW	BU	PS
	1									1				1		
Default	0															
Update rate	4 ms read															

The position error integrator is preset to the absolute error (Pr **13.10** is 1 or 2, and Pr **13.11** is one) otherwise it is set to zero when this parameter is set to one.

The position controller is disabled and the error integrator is also reset under the following conditions:

1. If the drive is disabled (i.e. inhibited, ready or tripped)
2. If the position controller mode (Pr **13.10**) is changed. The position controller is disabled transiently to reset the error integrator.
3. The absolute mode (Pr **13.11**) is changed. The position controller is disabled transiently to reset the error integrator.
4. One of the position sources is invalid.
5. The position feedback initialised (Pr **3.48**) is zero.

13.17	Relative jog reference															
Coding	Bit	SP	FI	DE	Txt	VM	DP	ND	RA	NC	NV	PT	US	RW	BU	PS
							1						1	1	1	
Range	0.0 to 4,000.0 rpm															
Default	0.0															
Update rate	Background read															

13.18	Relative jog enable															
Coding	Bit	SP	FI	DE	Txt	VM	DP	ND	RA	NC	NV	PT	US	RW	BU	PS
	1									1				1		
Default	0															
Update rate	4 ms read															

13.19	Relative jog reverse															
Coding	Bit	SP	FI	DE	Txt	VM	DP	ND	RA	NC	NV	PT	US	RW	BU	PS
	1									1				1		
Default	0															
Update rate	Background read															

Relative jog can be used to move the feedback position relative to the reference position at a speed defined by Pr **13.17**.

13.20	Local reference turns															
Coding	Bit	SP	FI	DE	Txt	VM	DP	ND	RA	NC	NV	PT	US	RW	BU	PS
										1				1	1	
Range	0 to 65,535															
Default	0															
Update rate	4 ms read															

13.21	Local reference position															
Coding	Bit	SP	FI	DE	Txt	VM	DP	ND	RA	NC	NV	PT	US	RW	BU	PS
										1				1	1	
Range	0 to 65,535															
Default	0															
Update rate	4 ms read															

13.22	**Local reference fine position**															
Coding	Bit	SP	FI	DE	Txt	VM	DP	ND	RA	NC	NV	PT	US	RW	BU	PS
										1				1	1	
Range	0 to 65,535															
Default	0															
Update rate	4 ms read															

13.23	**Local reference disable**															
Coding	Bit	SP	FI	DE	Txt	VM	DP	ND	RA	NC	NV	PT	US	RW	BU	PS
	1									1				1		
Default	0															
Update rate	4 ms read															

The local reference can be used to control the position of the motor shaft. If the local reference disable parameter is one the previously written value is used. This allows all three parts of the local reference position to be changed without data skew problems.

13.24	**Ignore local reference turns**															
Coding	Bit	SP	FI	DE	Txt	VM	DP	ND	RA	NC	NV	PT	US	RW	BU	PS
	1												1	1		
Default	0															
Update rate	4 ms read															

The local reference consists of a turns, a position and a fine position value. When Pr **13.24** is zero the reference is a 48bit position made from these three values.

If Pr **13.24** is set to one the local reference is a 32bit position made from the position and fine position values. The position delta, used as the input to the position controller, is calculated correctly even when the turns are ignored as the 32bit position is treated as a roll-over/roll-under counter. This feature can be used, for example, with the local reference when only the position (and not the turns or fine position) is available. This feature is not available when absolute mode is selected (Pr **13.11** = 1).

5.15 Menu 14: User PID controller

This menu contains a PID controller which has programmable reference and feedback inputs, programmable enable bit, reference slew rate limiting, variable clamp levels and programmable destination. The sample rate of the PID controller is 4 ms.

Figure 5-34 Menu 14 logic diagram

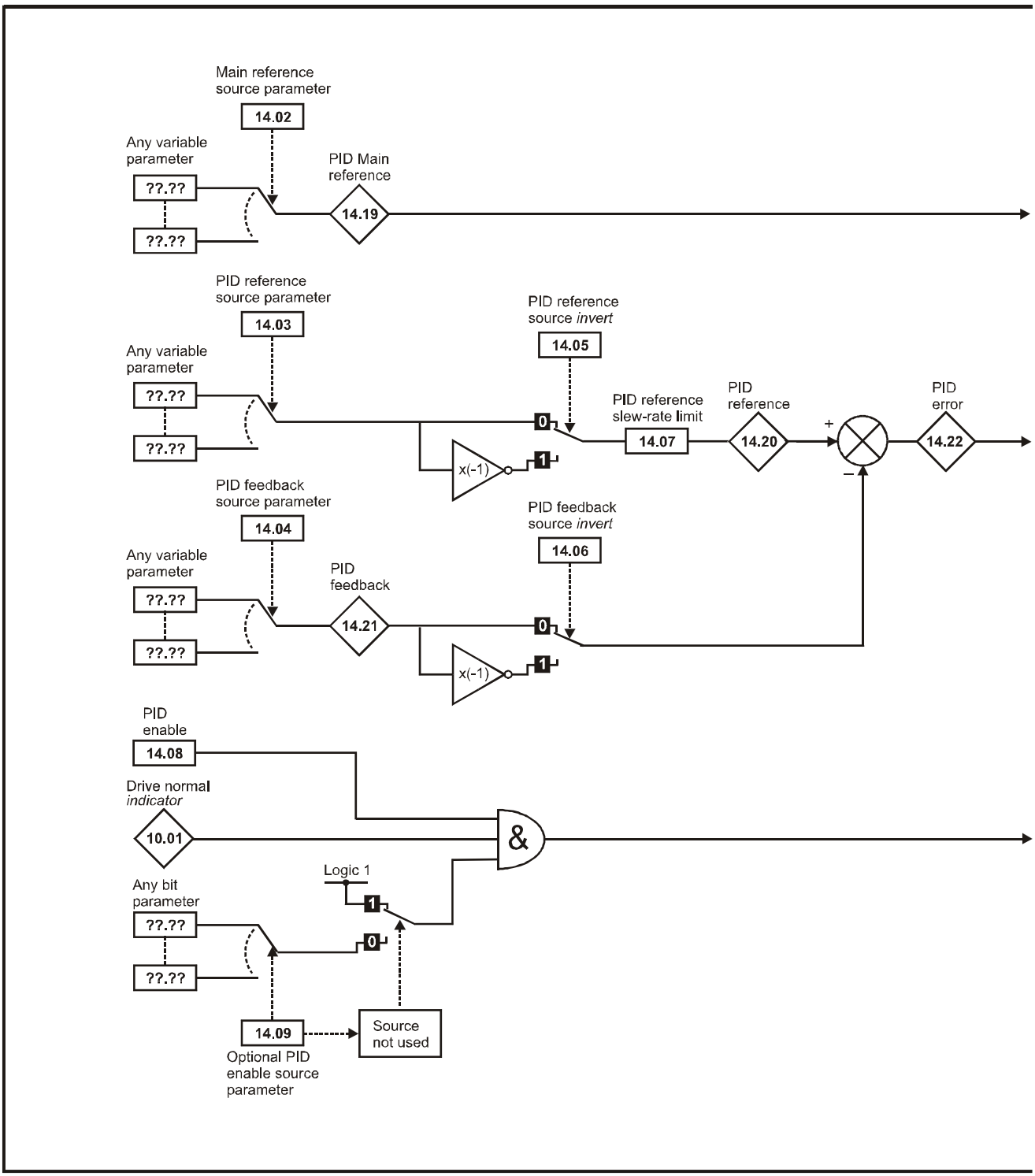

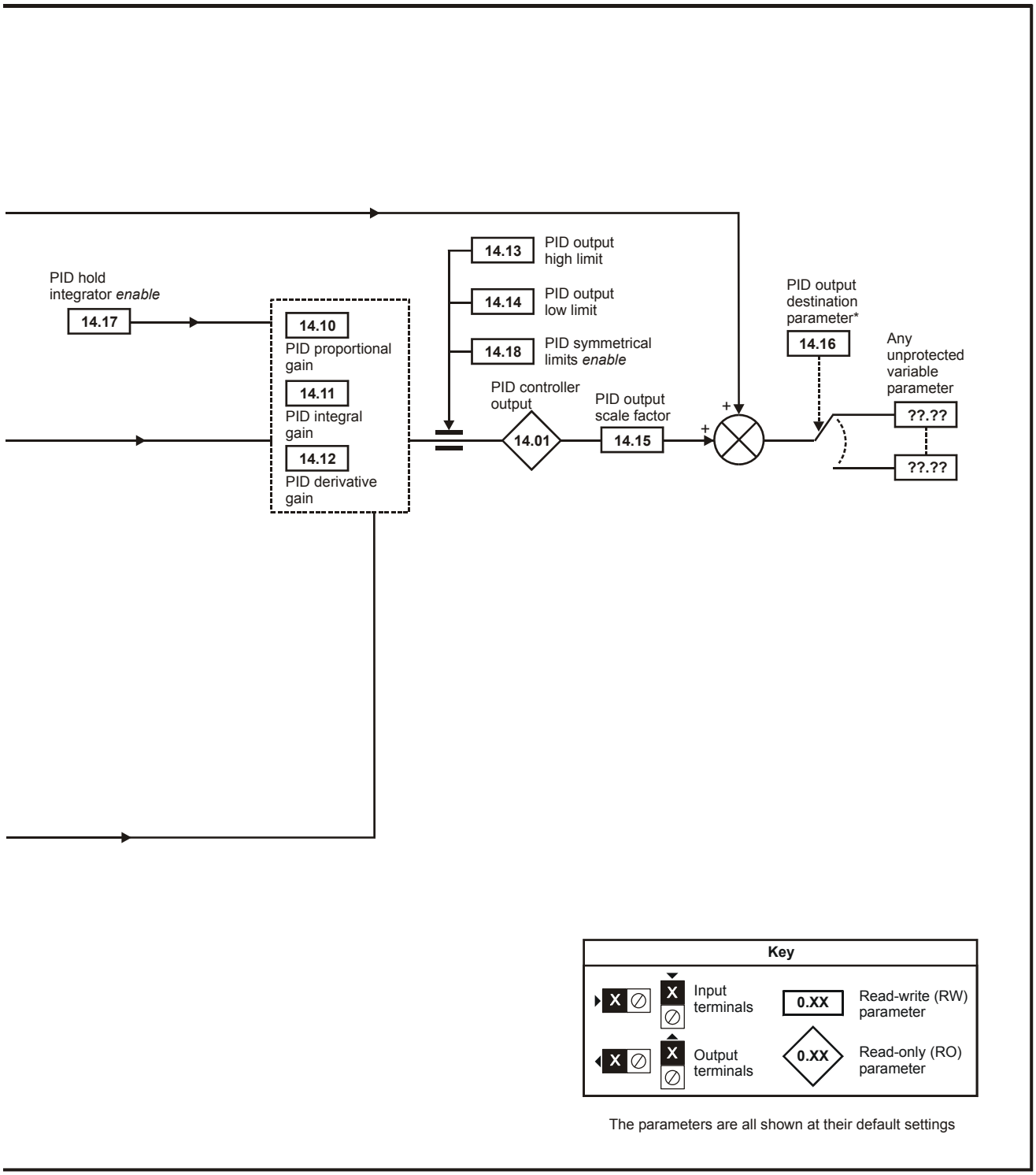

*The PID controller is only enabled if Pr **14.16** is set to a non Pr **xx.00** and unprotected destination parameter.

14.01	PID output															
Coding	Bit	SP	FI	DE	Txt	VM	DP	ND	RA	NC	NV	PT	US	RW	BU	PS
							2	1		1		1				
Range	±100.00 %															
Update rate	4 ms write															

Subject to the limits the PID controller output is given by

output = error x [P + I/s + Ds/(0.064s + 1)]

Where:

error = reference - feedback
P = proportional gain = Pr **14.10**
I = integral gain = Pr **14.11**
D = differential gain = Pr **14.12**

Therefore with an error of 100 % and P = 1.000 the output produced by the proportional term is 100 %. With an error of 100 % and I = 1.000 the output produced by the integral term will increase linearly by 100 % every second. With an error that is increasing by 100 % per second and D = 1.000 the output produced by the D term will be 100 %.

14.02	PID main reference source															
14.03	PID reference source															
14.04	PID feedback source															
Coding	Bit	SP	FI	DE	Txt	VM	DP	ND	RA	NC	NV	PT	US	RW	BU	PS
							2					1	1	1	1	
Range	Pr **0.00** to Pr **22.99**															
Default	Pr **0.00**															
Update rate	Read on reset															

14.05	PID reference source invert															
14.06	PID feedback source invert															
Coding	Bit	SP	FI	DE	Txt	VM	DP	ND	RA	NC	NV	PT	US	RW	BU	PS
	1												1	1		
Default	0															
Update rate	4 ms read															

14.07	PID reference slew rate limit															
Coding	Bit	SP	FI	DE	Txt	VM	DP	ND	RA	NC	NV	PT	US	RW	BU	PS
							1						1	1	1	
Range	0.0 to 3,200.0 s															
Default	0.0															
Update rate	Background read															

This parameter defines the time taken for the reference input to ramp from 0 to 100.0 % following a 0 to 100 % step change in input.

14.08	PID enable															
Coding	Bit	SP	FI	DE	Txt	VM	DP	ND	RA	NC	NV	PT	US	RW	BU	PS
	1												1	1		
Default	0															
Update rate	4 ms read															

14.09	**PID optional enable source**															
Coding	Bit	SP	FI	DE	Txt	VM	DP	ND	RA	NC	NV	PT	US	RW	BU	PS
							2					1	1	1	1	
Range	Pr **0.00** to Pr **22.99**															
Default	Pr **0.00**															
Update rate	Read on reset															

To enable the PID controller the drive must be OK (Pr **10.01** = 1) and the PID enable (Pr **14.08**) must be one. If the option enable source (Pr **14.09**) is 00.00 or routed to a non-existent parameter the PID controller is still enabled provided Pr **10.01** = 1 and Pr **14.08** = 1. If the optional enable source (Pr **14.09**) is routed to an existing parameter the source parameter must be one before the PID controller can be enabled. If the PID controller is disabled the output is zero and the integrator is set to zero.

14.10	**PID P gain**															
Coding	Bit	SP	FI	DE	Txt	VM	DP	ND	RA	NC	NV	PT	US	RW	BU	PS
							3						1	1	1	
Range	0.000 to 4.000															
Default	1.000															
Update rate	Background read															

14.11	**PID I gain**															
Coding	Bit	SP	FI	DE	Txt	VM	DP	ND	RA	NC	NV	PT	US	RW	BU	PS
							3						1	1	1	
Range	0.000 to 4.000															
Default	0.500															
Update rate	Background read															

14.12	**PID D gain**															
Coding	Bit	SP	FI	DE	Txt	VM	DP	ND	RA	NC	NV	PT	US	RW	BU	PS
							3						1	1	1	
Range	0.000 to 4.000															
Default	0.000															
Update rate	Background read															

14.13	**PID upper limit**															
Coding	Bit	SP	FI	DE	Txt	VM	DP	ND	RA	NC	NV	PT	US	RW	BU	PS
							2						1	1	1	
Range	0.00 to 100.00 %															
Default	100.00															
Update rate	Background read															

14.14	**PID lower limit**															
Coding	Bit	SP	FI	DE	Txt	VM	DP	ND	RA	NC	NV	PT	US	RW	BU	PS
							2						1	1		
Range	±100.00 %															
Default	-100.00															
Update rate	Background read															

If Pr **14.18** = 0, the upper limit (Pr **14.13**) defines the maximum positive output for the PID controller and the lower limit (Pr **14.14**) defines the minimum positive or maximum negative output. If Pr **14.18** = 1, the upper limit defines the maximum positive or negative magnitude for the PID controller output. When any of the limits are active the integrator is held.

14.15	PID scaling															
Coding	Bit	SP	FI	DE	Txt	VM	DP	ND	RA	NC	NV	PT	US	RW	BU	PS
							3						1	1	1	
Range	0.000 to 4.000															
Default	1.000															
Update rate	4 ms read															

14.16	PID destination															
Coding	Bit	SP	FI	DE	Txt	VM	DP	ND	RA	NC	NV	PT	US	RW	BU	PS
				1			2					1	1	1	1	
Range	Pr **0.00** to Pr **22.99**															
Default	Pr **0.00**															
Update rate	Read on reset															

The value written to the destination parameter is (PID controller output x scaling) + PID main reference.

14.17	PID hold integrator															
Coding	Bit	SP	FI	DE	Txt	VM	DP	ND	RA	NC	NV	PT	US	RW	BU	PS
	1									1				1		
Default	0															
Update rate	4 ms read															

When this parameter is set to 0 the integrator operates normally. Setting this parameter to 1 will cause the integrator value to be held. Setting this parameter does not prevent the integrator from being reset to zero if the PID controller is disabled.

14.18	PID symmetrical limit enable															
Coding	Bit	SP	FI	DE	Txt	VM	DP	ND	RA	NC	NV	PT	US	RW	BU	PS
	1												1	1		
Default	0															
Update rate	Background read															

See Pr **14.13** and Pr **14.14**.

14.19	PID main reference															
Coding	Bit	SP	FI	DE	Txt	VM	DP	ND	RA	NC	NV	PT	US	RW	BU	PS
							2	1		1		1				
Range	±100.00 %															
Update rate	4 ms write															

14.20	PID reference															
Coding	Bit	SP	FI	DE	Txt	VM	DP	ND	RA	NC	NV	PT	US	RW	BU	PS
							2	1		1		1				
Range	±100.00 %															
Update rate	4 ms write															

14.21	PID feedback															
Coding	Bit	SP	FI	DE	Txt	VM	DP	ND	RA	NC	NV	PT	US	RW	BU	PS
							2	1		1		1				
Range	±100.00 %															
Update rate	4 ms write															

14.22	**PID error**															
Coding	Bit	SP	FI	DE	Txt	VM	DP	ND	RA	NC	NV	PT	US	RW	BU	PS
							2	1		1		1				
Range	±100.00 %															
Update rate	4 ms write															

5.16 Menus 15, 16 and 17: Solutions Module slots

Pr **x.00** and Pr **x.01** are always present in menus 15, 16 and 17. Pr **x.01** indicates which type of module is present (0 = no module installed). When a module is installed the drive provides the relevant menu (menu 15 for slot 1, 16 for slot 2 and 17 for slot 3) depending on the Solutions Module installed. The possible categories are shown below.

Solutions Module ID	Module	Category
0	No module installed	
102	SM-Universal Encoder Plus	Feedback
104	SM-Encoder Plus and SM-Encoder Output Plus	
201	SM-I/O Plus	Automation (I/O Expansion)
203	SM-I/O Timer	
204	SM-I/O PELV	
205	SM-I/O24V Protected	
206	SM-I/O120V	
207	SM-I/O Lite	
208	SM-I/O 32	
304	SM-Applications Plus	Automation (Applications)
305	SM-Applications Lite V2	
306	SM-Register	
403	SM-PROFIBUS DP-V1	Fieldbus
404	SM-INTERBUS	
407	SM-DeviceNet	
408	SM-CANopen	
410	SM-Ethernet	
421	SM-EtherCAT	

Refer to the specific Solutions Module User Guide for more information.

Most modules include a processor and parameters are updated by the processor in the Solutions Module. However, dumb modules do not contain a processor and all parameters are updated by the drive processor.

Dumb Solutions Module parameters are read/written by the drive background task or at the combined update time for time critical parameters. The combined update time depends on the number and type of dumb Solutions Modules installed to the drive. For each Solutions Module the update rate of these parameters is specified as 4 ms, 8 ms, etc. The combined update time is the total of the update times for all dumb Solutions Modules installed.

For example, if a module with 4 ms update time and a module with 8 ms are installed to the drive, then the combined update time for the time critical parameters of each module is 12 ms.

In the parameter tables the update time added by the type of module is given, for example 4 ms for the SM-Encoder Plus or 8 ms for the SM-I/O Plus.

When parameters are saved by the user in the drive EEPROM the option code of the currently installed module is saved in EEPROM. If the drive is subsequently powered-up with a different module installed, or no module installed where a module was previously installed, the drive gives a Slot.dF trip. The menu for the relevant slot appears for the new module category with the default parameter values for the new category. The new parameters values are not stored in EEPROM until the user performs a parameter save.

Parameters common to all categories

Parameter		Range	Default	Type					
x.01	Solutions Module ID	0 to 599		RO	Uni			PT	US
x.50	Solutions Module error status	0 to 255		RO	Uni		NC	PT	

5.17 Menu 18: Application menu 1

Menu 18 contains parameters that do not affect the operation of the drive. These general purpose parameters are intended for use with fieldbus and application Solutions Modules. The read write parameters in this menu can be saved in the drive.

18.01	**Application menu 1 power-down saved integer**															
Coding	Bit	SP	FI	DE	Txt	VM	DP	ND	RA	NC	NV	PT	US	RW	BU	PS
										1				1		1
Range	-32,768 to 32,767															
Default	0															
Update rate	N/A															

18.02 to 18.10	**Application menu 1 read-only integer**															
Coding	Bit	SP	FI	DE	Txt	VM	DP	ND	RA	NC	NV	PT	US	RW	BU	PS
										1						
Range	-32,768 to 32,767															
Default	0															
Update rate	N/A															

18.11 to 18.30	**Application menu 1 read-write integer**															
Coding	Bit	SP	FI	DE	Txt	VM	DP	ND	RA	NC	NV	PT	US	RW	BU	PS
													1	1		
Range	-32,768 to 32,767															
Default	0															
Update rate	N/A															

18.31 to 18.50	**Application menu 1 read-write bit**															
Coding	Bit	SP	FI	DE	Txt	VM	DP	ND	RA	NC	NV	PT	US	RW	BU	PS
	1												1	1		
Default	0															
Update rate	N/A															

5.18 Menu 19: Application menu 2

Menu 19 contains parameters that do not affect the operation of the drive. These general purpose parameters are intended for use with fieldbus and application Solutions Modules. The read write parameters in this menu can be saved in the drive.

19.01	Application menu 2 power-down saved integer															
Coding	Bit	SP	FI	DE	Txt	VM	DP	ND	RA	NC	NV	PT	US	RW	BU	PS
										1				1		1
Range	-32,768 to 32,767															
Default	0															
Update rate	N/A															

19.02 to 19.10	Application menu 2 read-only integer															
Coding	Bit	SP	FI	DE	Txt	VM	DP	ND	RA	NC	NV	PT	US	RW	BU	PS
										1						
Range	-32,768 to 32,767															
Default	0															
Update rate	N/A															

19.11 to 19.30	Application menu 2 read-write integer															
Coding	Bit	SP	FI	DE	Txt	VM	DP	ND	RA	NC	NV	PT	US	RW	BU	PS
													1	1		
Range	-32,768 to 32,767															
Default	0															
Update rate	N/A															

19.31 to 19.50	Application menu 2 read-write bit															
Coding	Bit	SP	FI	DE	Txt	VM	DP	ND	RA	NC	NV	PT	US	RW	BU	PS
	1												1	1		
Default	0															
Update rate	N/A															

5.19 Menu 20: Application menu 3

Menu 20 contains parameters that do not affect the operation of the drive. These general purpose parameters are intended for use with fieldbus and application Solutions Modules. The read write parameters in this menu cannot be saved in the drive.

20.01 to 20.20	**Application menu 3 read-write integer**															
Coding	Bit	SP	FI	DE	Txt	VM	DP	ND	RA	NC	NV	PT	US	RW	BU	PS
										1				1		
Range	-32,768 to 32,767															
Default	0															
Update rate	N/A															

20.21 to 20.40	**Application menu 3 read-write long integer**															
Coding	Bit	SP	FI	DE	Txt	VM	DP	ND	RA	NC	NV	PT	US	RW	BU	PS
										1				1		
Range	-2^{31} to $2^{31}-1$															
Default	0															
Update rate	N/A															

5.20 Menu 21: Second motor parameters

The following parameters are used instead of the normal motor setup parameters when Pr **11.45** = 1.

When the alternative parameter set is being used by the drive, the decimal point second from the right in the first row is on.

For more information about a particular parameter, see the equivalent normal motor map 1 parameter.

21.01	**Maximum reference clamp**															
Coding	Bit	SP	FI	DE	Txt	VM	DP	ND	RA	NC	NV	PT	US	RW	BU	PS
							1						1	1	1	
Range	SPEED_LIMIT_MAX rpm															
Default	1000															
Normal parameter	Pr **1.06 = {SE02, 0.23}**															
Update rate	Background read															

21.02	**Minimum reference clamp**															
Coding	Bit	SP	FI	DE	Txt	VM	DP	ND	RA	NC	NV	PT	US	RW	BU	PS
							1					1	1	1		
Range	-SPEED_LIMIT_MAX to SPEED_LIMIT_MAX rpm*															
Default	0.0															
Normal parameter	Pr **1.07 = {SE01, 0.22}**															
Update rate	Background read															

* The range shown for Pr **21.02** shows the range used for scaling purposes (i.e. for routing to an analog output etc.). Further range restrictions are applied as shown below:

Pr 1.08 (Neg min ref enable)	**Pr 1.10 (Bipolar mode enable)**	**Range**
0	0	0 to 21.01
0	1	0
1	0	-SPEED_LIMIT_MAX to 0 rpm
1	1	-SPEED_LIMIT_MAX to 0 rpm

21.03	**Reference selector**															
Coding	Bit	SP	FI	DE	Txt	VM	DP	ND	RA	NC	NV	PT	US	RW	BU	PS
					1								1	1	1	
Range	0 to 6															
Default	0 (A1.A2)															
Normal parameter	Pr **1.14= {SE05, 0.26}**															
Update rate	4 ms read															

Unlike the motor 1 (Pr **1.14= {SE05, 0.26}**) this parameter is not used for T28 and T29 digital input auto-selection (see Pr **8.52** on page 121).

Pr **21.03** defines how the value of Pr **1.49** is derived as follows:

Value of Pr 21.03	**Display String**	**Pr 1.49**
0	A1.A2	*Selected by terminal input
1	A1.Pr	1
2	A2.Pr	2
3	Pr	3
4	Pad	4
5	Prc	5
6	Keypad ref only	6

*The bit Pr **1.41** to Pr **1.44** and Pr **1.52** can be controlled to force the value of Pr **1.49**, as follows:

all bits equal to zero gives 1,

Pr **1.41** = 1 then Pr **1.49** = 2
Pr **1.42** = 1 then Pr **1.49** = 3
Pr **1.43** = 1 then Pr **1.49** = 4
Pr **1.44** = 1 then Pr **1.49** = 5
Pr **1.52** = 1 then Pr **1.49** = 6

The bit parameters with lower numbers have priority over those with higher numbers.

Pr **1.49** and Pr **1.50** then define the reference as follows:

Pr 1.49	Pr 1.50	Reference
1	1	Analog reference 1
1	>1	Preset defined by Pr **1.50**
2	1	Analog reference 2
2	>1	Preset defined by Pr **1.50**
3	x	Preset defined by Pr **1.50**
4	x	Keypad reference
5	x	Precision reference
6	x	Pad reference only

Keypad reference
If Keypad reference is selected the drive sequencer is controlled directly by the keypad keys and the keypad reference parameter (Pr **1.17**) is selected. The sequencing bits, Pr **6.30** to Pr **6.34**, have no effect and jog is disabled.

Reference selected by timer
The presets are selected automatically in turn. Pr **1.16** defines the time between each change.

21.04	**Acceleration rate**															
Coding	Bit	SP	FI	DE	Txt	VM	DP	ND	RA	NC	NV	PT	US	RW	BU	PS
						1	3						1	1	1	
Range	0 to MAX_RAMP_RATE_M2															
Default	5.000															
Normal parameter	Pr **2.11 = {SE03, 0.24}**															
Update rate	Background read															

21.05	**Deceleration rate**															
Coding	Bit	SP	FI	DE	Txt	VM	DP	ND	RA	NC	NV	PT	US	RW	BU	PS
						1	1						1	1	1	
Range	0 to MAX_RAMP_RATE_M2															
Default	5.000															
Normal parameter	Pr **2.21 = {SE04, 0.25}**															
Update rate	Background read															

21.06	**Base speed**															
Coding	Bit	SP	FI	DE	Txt	VM	DP	ND	RA	NC	NV	PT	US	RW	BU	PS
							1						1	1	1	
Range	0 to 10000.0 rpm															
Default	1000															
Normal parameter	Pr **5.08 = {SE08, 0.29}**															
Update rate	Background read															

21.07	Motor rated current															
Coding	Bit	SP	FI	DE	Txt	VM	DP	ND	RA	NC	NV	PT	US	RW	BU	PS
						1	1		1				1	1	1	
Range	0 to RATED_CURRENT_MAX A															
Default	RATED_CURRENT_MAX															
Normal parameter	Pr **5.07 = {SE07, 0.28}**															
Update rate	Background read															

21.08	Back emf set point															
Coding	Bit	SP	FI	DE	Txt	VM	DP	ND	RA	NC	NV	PT	US	RW	BU	PS
													1	1	1	
Range	0 to ARMATURE_VOLTAGE_MAX V DC															
Default	For 480 V drive: Eur: 440, USA 500 For 575 V drive: Eur: 630, USA 630 For 690 V drive: Eur: 760, USA 760															
Normal parameter	Pr **5.59**															
Update rate	Background read															

21.09	Armature rated voltage															
Coding	Bit	SP	FI	DE	Txt	VM	DP	ND	RA	NC	NV	PT	US	RW	BU	PS
						1			1				1	1	1	
Range	0 to ARMATURE_VOLTAGE_MAX V DC															
Default	For 480 V drive: Eur: 440, USA 500 For 575 V drive: Eur: 630, USA 630 For 690 V drive: Eur: 760, USA 760															
Normal parameter	Pr **5.09 = {SE06, 0.27}**															
Update rate	Level 4 read															

21.10	Armature resistance															
Coding	Bit	SP	FI	DE	Txt	VM	DP	ND	RA	NC	NV	PT	US	RW	BU	PS
							4		1				1	1	1	
Range	0.0000 to 6.0000 Ω															
Default	0.0000															
Normal parameter	Pr **5.61**															
Update rate	Background read															

21.11	Motor constant															
Coding	Bit	SP	FI	DE	Txt	VM	DP	ND	RA	NC	NV	PT	US	RW	BU	PS
							1		1				1	1	1	
Range	0.0 to 100.0 %															
Default	50 %															
Normal parameter	Pr **5.15**															
Update rate	Background read															

21.12	**Discontinuous current controller Ki gain**															
Coding	Bit	SP	FI	DE	Txt	VM	DP	ND	RA	NC	NV	PT	US	RW	BU	PS
									1				1	1	1	
Range	0 to 4000															
Default	200															
Normal parameter	Pr **4.34**															
Update rate	Background read															

21.13	**Continuous current controller Kp gain**															
Coding	Bit	SP	FI	DE	Txt	VM	DP	ND	RA	NC	NV	PT	US	RW	BU	PS
									1				1	1	1	
Range	0 to 4000															
Default	100															
Normal parameter	Pr **4.13**															
Update rate	Background read															

21.14	**Continuous current controller Ki gain**															
Coding	Bit	SP	FI	DE	Txt	VM	DP	ND	RA	NC	NV	PT	US	RW	BU	PS
									1				1	1	1	
Range	0 to 4000															
Default	50															
Normal parameter	Pr **4.14**															
Update rate	Background read															

21.15	**Motor 2 active**															
Coding	Bit	SP	FI	DE	Txt	VM	DP	ND	RA	NC	NV	PT	US	RW	BU	PS
	1							1		1		1				
Normal motor parameter	Pr **21.15**															
Update rate	Background write															

Pr **21.15** does not have an equivalent normal motor parameter, but shows when motor 2 is active.

21.16	**Thermal filter**															
Coding	Bit	SP	FI	DE	Txt	VM	DP	ND	RA	NC	NV	PT	US	RW	BU	PS
							1						1	1	1	
Range	0.0 to 3000.0															
Default	89.0															
Normal motor parameter	Pr **4.15**															
Update rate	Background read															

21.17	Speed controller Kp gain															
Coding	Bit	SP	FI	DE	Txt	VM	DP	ND	RA	NC	NV	PT	US	RW	BU	PS
							4						1	1	1	
Range	0.00 to 6.5535(1 / (rad/s))															
Default	0.0300															
Normal motor parameter	Pr **3.10 = {SP01, 0.61}**															
Update rate	Background read															

21.18	Speed controller Ki gain															
Coding	Bit	SP	FI	DE	Txt	VM	DP	ND	RA	NC	NV	PT	US	RW	BU	PS
							2						1	1	1	
Range	0.00 to 655.35 s/rad s^{-1}															
Default	0.10															
Normal motor parameter	Pr **3.11 = {SP02, 0.62}**															
Update rate	Background read															

21.19	Speed controller Kd gain															
Coding	Bit	SP	FI	DE	Txt	VM	DP	ND	RA	NC	NV	PT	US	RW	BU	PS
							5						1	1	1	
Range	0.00000 to 0.65535(1/s / (rad/s))															
Default	0.00000															
Normal motor parameter	Pr **3.12 = {SP03, 0.63}**															
Update rate	Background read															

When the second motor is selected the gains defined in Pr **21.17** to Pr **21.19** are used directly by the speed controller. The speed controller setup method defined by Pr **3.13** is ignored.

21.21	Speed feedback selector															
Coding	Bit	SP	FI	DE	Txt	VM	DP	ND	RA	NC	NV	PT	US	RW	BU	PS
					1								1	1	1	
Range	0 to 5															
Default	5															
Normal motor parameter	Pr **3.26 = {Fb01, 0.71}**															
Update rate	Background read															

0, drv: Drive encoder

The position feedback from the encoder connected to the drive itself is used to derive the speed feedback for the speed controller and to calculate the motor rotor flux position.

1, Slot1: Solutions Module in slot 1

The position feedback from the Solutions Module in Solutions Module slot 1 is used to derive the speed feedback for the speed controller and to calculate the motor rotor flux position. If a position feedback category Solutions Module is not installed in slot 1 the drive produces an EnC9 trip.

2, Slot2: Solutions Module in slot 2

3, Slot3: Solutions Module in slot 3

4, tacho

5, Est speed

21.23	**Rated field voltage**															
Coding	Bit	SP	FI	DE	Txt	VM	DP	ND	RA	NC	NV	PT	US	RW	BU	PS
								1					1	1		
Range	0 to 500 Vdc															
Default	Eur: 360, USA: 300															
Normal parameter	Pr **5.73 = {SE11, 0.32}**															
Update rate	Background read															

21.24	**Rated field current**															
Coding	Bit	SP	FI	DE	Txt	VM	DP	ND	RA	NC	NV	PT	US	RW	BU	PS
						1	2		1			1	1	1		
Range	0 to FIELD_CURRENT_SET_MAX															
Default	Size 1 - Eur: 2A, USA: 8A Size 2A&B - Eur: 3A, USA: 20A Size 2C&D - Eur: 5A, USA: 20A															
Normal parameter	Pr **5.70 = {SE10, 0.31}**															
Update rate	Background read															

21.25	**Motor saturation breakpoint 1**															
Coding	Bit	SP	FI	DE	Txt	VM	DP	ND	RA	NC	NV	PT	US	RW	BU	PS
													1	1	1	
Range	0 to 100 % of rated flux															
Default	50															
Normal parameter	Pr **5.29**															
Update rate	Background read															

21.26	**Motor saturation breakpoint 2**															
Coding	Bit	SP	FI	DE	Txt	VM	DP	ND	RA	NC	NV	PT	US	RW	BU	PS
													1	1	1	
Range	0 to 100 % of rated flux															
Default	75															
Normal parameter	Pr **5.30**															
Update rate	Background read															

21.27	**Motoring current limit**															
Coding	Bit	SP	FI	DE	Txt	VM	DP	ND	RA	NC	NV	PT	US	RW	BU	PS
						1	1		1				1	1	1	
Range	0 to MOTOR2_CURRENT_LIMIT_MAX %															
Default	150.0*															
Normal parameter	Pr **4.05**															
Update rate	Background read															

21.28	Regen current limit															
Coding	Bit	SP	FI	DE	Txt	VM	DP	ND	RA	NC	NV	PT	US	RW	BU	PS
						1	1		1				1	1	1	
Range	0 to MOTOR2_CURRENT_LIMIT_MAX %															
Default	150.0*															
Normal parameter	Pr **4.06**															
Update rate	Background read															

21.29	Symmetrical current limit															
Coding	Bit	SP	FI	DE	Txt	VM	DP	ND	RA	NC	NV	PT	US	RW	BU	PS
						1	1		1				1	1	1	
Range	0 to MOTOR2_CURRENT_LIMIT_MAX %															
Default	150.0*															
Normal parameter	Pr **4.07**															
Update rate	Background read															

*These are the maximum default values. If the variable maximum of this parameter (MOTOR2_CURRENT_LIMIT_MAX) gives a lower value with the default value of Motor rated current (Pr **21.07**) the default of this parameter is at the lower value.

21.30	Field thermal filter															
Coding	Bit	SP	FI	DE	Txt	VM	DP	ND	RA	NC	NV	PT	US	RW	BU	PS
							1						1	1	1	
Range	0 to 3000.0															
Default	24.0															
Normal parameter	Pr **5.81**															
Update rate	Background read															

21.31	Flux loop P gain															
Coding	Bit	SP	FI	DE	Txt	VM	DP	ND	RA	NC	NV	PT	US	RW	BU	PS
							2						1	1	1	
Range	0 to 30.0															
Default	3															
Normal parameter	Pr **5.71**															
Update rate	Background read															

Field current control loop proportional gain.

21.32	Flux loop I gain															
Coding	Bit	SP	FI	DE	Txt	VM	DP	ND	RA	NC	NV	PT	US	RW	BU	PS
							2						1	1	1	
Range	0 to 300.0															
Default	60															
Normal parameter	Pr **5.72**															
Update rate	Background read															

Field current control loop integral gain.

21.33	**Field weakening voltage loop P gain**															
Coding	Bit	SP	FI	DE	Txt	VM	DP	ND	RA	NC	NV	PT	US	RW	BU	PS
							2						1	1	1	
Range	0 to 300.0															
Default	0.4															
Normal parameter	Pr **5.62**															
Update rate	Background read															

Field weakening control loop proportional gain.

21.34	**Field weakening voltage loop I gain**															
Coding	Bit	SP	FI	DE	Txt	VM	DP	ND	RA	NC	NV	PT	US	RW	BU	PS
							2						1	1	1	
Range	0 to 300.0															
Default	5															
Normal parameter	Pr **5.63**															
Update rate	Background read															

Field weakening control loop integral gain.

21.35	**Rated field compensation factor**															
Coding	Bit	SP	FI	DE	Txt	VM	DP	ND	RA	NC	NV	PT	US	RW	BU	PS
													1	1	1	
Range	0 to 100 %															
Default	100 %															
Normal parameter	Pr **5.74**															
Update rate	Background read															

5.21 Menu 22: Additional menu 0 setup

Menu 22 contains parameters that are used to set up the source parameters for the first 20 parameters in Menu 0.

22.01 to 22.20	**Parameter 00.xy setup**															
Coding	Bit	SP	FI	DE	Txt	VM	DP	ND	RA	NC	NV	PT	US	RW	BU	PS
							2					1	1	1	1	
Range	Pr **0.00** to Pr **22.99**															
Default	0.00															
Update rate	Background read															

These parameters define the parameters that reside in the programmable area in menu 0.

5.22 Menu 23 Header definitions

Menu 23 contains parameters that define the header parameter for Menu 0.

Menu 0 can be accessed by 2 methods:

1. Pr **11.44** (**SE14, 0.35**) = 0. Sub block mode.
2. Pr **11.44** (**SE14, 0.35**) <>0. Linear mode.

Menu 23 Menu 0 Customization

Menu 23 contains the parameters to allow menu 0 to be customized in sub block mode. The first sub block is a user defined area (USEr) which is configured by the parameters in menu 22. The next 7 sub blocks are pre-defined. Access to the pre-defined blocks is enabled or disabled by Pr **23.03** to Pr **23.09**.

Movement between sub blocks is achieved with the left and right keys.

Pr **23.01** contains all the sub block headers.

Table 5-10 and Figure 5-35 show the result of the direction keys when Pr **11.44** (**SE14, 0.35**) is set to L1 (0). When Pr **11.44** (**SE14, 0.35**) is not 0 the left and right keys will allow access to the advance parameter set and menu 0 will become a linear menu.

Table 5-10 Keypad navigation

Starting location	Action	Finishing location
Header	Right	Next header
	Left	Previous header
	Up	First parameter in header block
	Down	Last parameter in header block
Parameter	Right	Next header
	Left	Previous header
	Up	Next parameter in header block
	Down	Previous parameter in header block

When moving between the user block headers the user block header is only displayed if the length of the user block is not zero and there are some valid parameters in the block. When moving between pre-defined header blocks the pre defined header block is only displayed if the pre defined block is enabled.

When moving between parameters within a block only valid parameters are displayed.

Figure 5-35 Sub block navigation

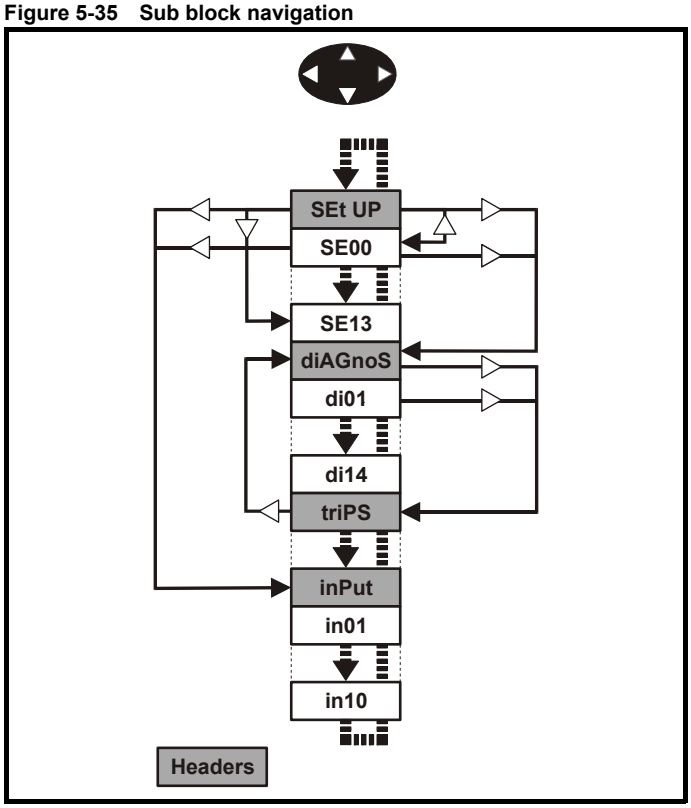

Coding

The coding defines the attributes of the parameter as follows.

Coding	Attribute
{X.XX}	Copied Menu 0 or advanced parameter
Bit	1 bit parameter: 'On' or 'OFF' on the display
Bi	Bipolar parameter
Uni	Unipolar parameter
Txt	Text: the parameter uses text strings instead of numbers.
SP	Spare: not used
FI	Filtered: some parameters which can have rapidly changing values are filtered when displayed on the drive keypad for easy viewing.
DE	Destination pointer parameter: This parameter can be used to set up the location (i.e. menu/parameter number) where the destination data is to be routed.
VM	Variable maximum: the maximum of this parameter can vary.
DP	Decimal place: indicates the number of decimal places used by this parameter.
ND	No default: when defaults are loaded (except when the drive is manufactured or on EEPROM failure) this parameter is not modified.
RA	Rating dependant: this parameter is likely to have different values and ranges with drives of different voltage and current ratings. Parameters with this attribute will not be transferred to the destination drive by a SMARTCARD when the rating of the destination drive is different from the source drive if the drive voltage ratings are different or the file is a parameter file. However, the value will be transferred if only the current rating is different and the file is a differences from default type file.
NC	Not copied: not transferred to or from SMARTCARD during copying.
NV	Not visible: not visible on the keypad.
PT	Protected: cannot be used as a destination.
US	User save: saved in drive EEPROM when the user initiates a parameter save.
RW	Read/write: can be written by the user.
RO	Read only: can only be read by the user
BU	Bit default one/unsigned: Bit parameters with this flag set to one have a default of one (all other bit parameters have a default of zero. Non-bit parameters are unipolar if this flag is one.
PS	Power-down save: parameter automatically saved in drive EEPROM when the under volts (UV) trip occurs. Power-down save parameters are also saved in the drive when the user initiates a parameter save.

23.01	Sub block headers															
Coding	Bit	SP	FI	DE	Txt	VM	DP	ND	RA	NC	NV	PT	US	RW	BU	PS
					1					1		1			1	
Range	0 to 7 (USEr (0), SEt UP (1), diAGnoS (2), triPS (3), SP LOOP (4), SintEr (5), Fb SP (6), inPut (7)															
Default	USEr (0)															
Update rate	Background read															

Defines the sub block headers. Can be used by the MP-Keypad to display the same strings as the SM-Keypad.

23.02	Binary sum of pre defined sub block enables															
Coding	Bit	SP	FI	DE	Txt	VM	DP	ND	RA	NC	NV	PT	US	RW	BU	PS
										1		1			1	
Range	0 to 127															
Update rate	Background read															

The Binary sum of Pr **23.03** to Pr **23.09**. To be used by the MP-Keypad.

Parameter	Value
23.03	1
23.04	2
23.05	4
23.06	8
23.07	16
23.08	32
23.09	64

23.03 to 23.09	Pre defined sub block enable															
Coding	Bit	SP	FI	DE	Txt	VM	DP	ND	RA	NC	NV	PT	US	RW	BU	PS
	1												1	1	1	
Range	0 to 1															
Default	1															
Update rate	Background read															

When this parameter is set to 1 the associated pre-defined sub block is accessible. When this parameter is 0 the associated pre-defined block is bypassed.

Parameter	Description	Display
23.03	setup	SEt UP
23.04	Diagnostics	diAGnoS
23.05	Trips	triPS
23.06	Speed Loop	SP LOOP
23.07	Serial interface	SintEr
23.08	Speed Feedback	Fb SP
23.09	IO	InPut

5.23 Pre-Defined Sub Blocks

set-up

Menu 0	Parameter	Description	Display
0.21	**1.00**	Parameter 0	**SE00**
0.22	**1.07**	Minimum reference clamp	**SE01**
0.23	**1.06**	Maximum reference clamp	**SE02**
0.24	**2.11**	Acceleration rate	**SE03**
0.25	**2.21**	Deceleration rate	**SE04**
0.26	**1.14**	Reference selector	**SE05**
0.27	**5.09**	Armature rated voltage	**SE06**
0.28	**5.07**	Motor rated current	**SE07**
0.29	**5.08**	Base speed	**SE08**
0.30	**11.42**	Parameter copying	**SE09**
0.31	**5.70**	Rated field current	**SE10**
0.32	**5.73**	Rated field voltage	**SE11**
0.33	**5.77**	Enable field control	**SE12**
0.34	**5.12**	Autotune	**SE13**
0.35	**11.44**	Security status	**SE14**

Diagnostic

Menu 0	Parameter	Description	Display
0.36	**1.01**	Speed reference selected	**di01**
0.37	**1.03**	Pre-ramp reference	**di02**
0.38	**2.01**	Post ramp reference	**di03**
0.39	**3.01**	Final speed reference	**di04**
0.40	**3.02**	Speed feedback	**di05**
0.41	**3.04**	Speed controller output	**di06**
0.42	**4.03**	Torque demand	**di07**
0.43	**4.01**	Current magnitude	**di08**
0.44	**5.56**	Field current feedback	**di09**
0.45	**5.02**	Armature voltage	**di10**
0.46	**1.11**	Reference enabled indicator	**di11**
0.47	**1.12**	Reverse selected indicator	**di12**
0.48	**1.13**	Jog selected indicator	**di13**
0.49	**11.29**	Software version	**di14**
0.50	**0.00**	Spare	

Trips

Menu 0	Parameter	Description	Display
0.51	**10.20**	Trip 0	**tr01**
0.52	**10.21**	Trip 1	**tr02**
0.53	**10.22**	Trip 2	**tr03**
0.54	**10.23**	Trip 3	**tr04**
0.55	**10.24**	Trip 4	**tr05**
0.56	**10.25**	Trip 5	**tr06**
0.57	**10.26**	Trip 6	**tr07**
0.58	**10.27**	Trip 7	**tr08**
0.59	**10.28**	Trip 8	**tr09**
0.60	**10.29**	Trip 9	**tr10**

Speed loop

Menu 0	Parameter	Description	Display
0.61	**3.10**	Speed controller proportional gain	**SP01**
0.62	**3.11**	Speed controller integral gain	**SP02**
0.63	**3.12**	Speed controller differential feedback gain	**SP03**
0.64	**0.00**	Spare	
0.65	**0.00**	Spare	

Serial interface

Menu 0	Parameter	Description	Display
0.66	**11.25**	Baud rate	**Si01**
0.67	**11.23**	Serial address	**Si02**
0.68	**0.00**	Spare	
0.69	**0.00**	Spare	
0.70	**0.00**	Spare	

Speed feedback

Menu 0	Parameter	Description	Display
0.71	**3.26**	Speed feedback selector	**Fb01**
0.72	**3.51**	Tachometer rating (V/1000 rpm)	**Fb02**
0.73	**3.53**	Tachometer input mode	**Fb03**
0.74	**3.52**	Tachometer speed feedback	**Fb04**
0.75	**3.34**	Drive encoder lines per revolution	**Fb05**
0.76	**3.36**	Encoder supply	**Fb06**
0.77	**3.38**	Encoder type	**Fb07**
0.78	**3.39**	Encoder termination select	**Fb08**
0.79	**3.27**	Encoder speed feedback	**Fb09**
0.80	**0.00**	Spare	

IO

Menu 0	Parameter	Description	Display
0.81	**7.15**	Analog input 3 mode	**in01**
0.82	**7.01**	Analog input 1	**in02**
0.83	**7.02**	Analog input 2	**in03**
0.84	**7.03**	Analog input 3	**in04**
0.85	**8.01**	I/O state 1	**in05**
0.86	**8.02**	I/O state 2	**in06**
0.87	**8.03**	I/O state 3	**in07**
0.88	**8.04**	I state 4	**in08**
0.89	**8.05**	I state 5	**in09**
0.90	**8.06**	I state 6	**in10**

5.24 Menu 0 (linear)

Menu 0 is used to bring together various commonly used parameters for basic easy set up of the drive.

Appropriate parameters are copied from the advanced menus into menu 0 and thus exist in both locations.

For further information, refer to section 5.22 *Menu 23 Header definitions* on page 199.

Figure 5-36 Menu 0 copying

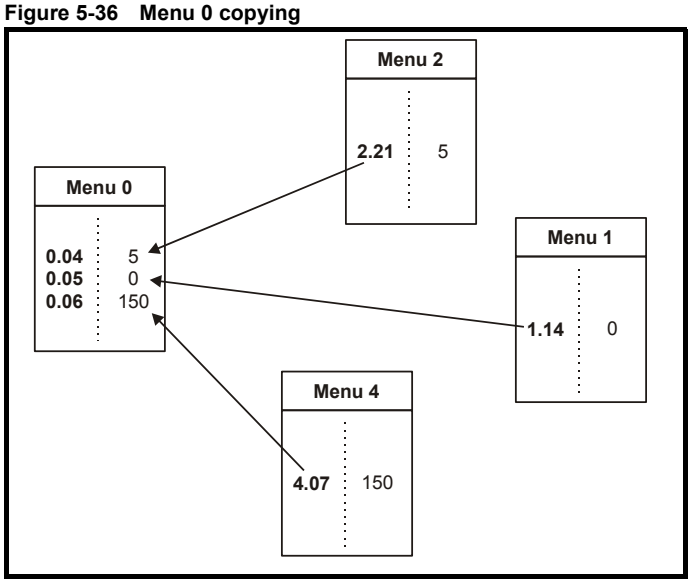

5.25 Menu structure

The drive parameter structure consists of menus and parameters.

The drive initially powers up in sub menu mode. Once Level 2 access (L2) has been enabled (refer to Pr **11.44** (**SE14, 0.35**) the left and right buttons are used to navigate between numbered menus.

For further information, refer to section 2.7 *Parameter access level and security* on page 13.

Figure 5-37 Menu structure

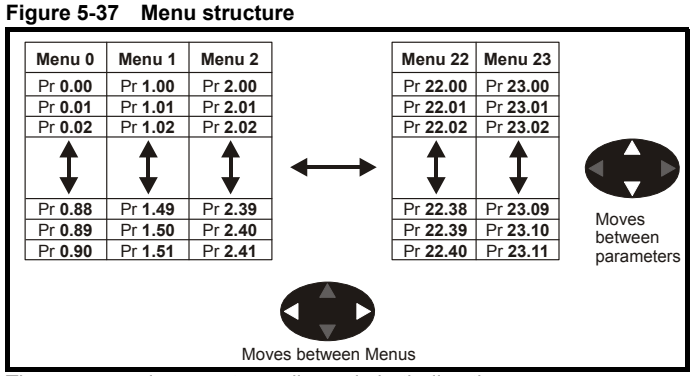

The menus and parameters roll over in both directions.

For example:

- If the last parameter is displayed, a further press will cause the display to roll-over and show the first parameter.

When changing between menus the drive remembers which parameter was last viewed in a particular menu and will display that parameter. The menus and parameters roll over in both directions.

5.26 32 bit parameters

All parameters in the drive are 1 bit, 16 bit or 32 bit. This section identifies all the 32 bit parameters in the drive and Solution Modules.

5.26.1 Drive parameters

The table below contains all the 32 bit parameters present in the drive.

Table 5-11 32 bit drive parameters

Menu	32-bit parameters							
Menu 1	Pr **1.01** = **{di01, 0.36}**	Pr **1.02**	Pr **1.03** = **{di02, 0.37}**	Pr **1.04**	Pr **1.06** = **{SE02, 0.23}**	Pr **1.07** = **{SE01, 0.22}**	Pr **1.17**	Pr **1.18**
	Pr **1.21**	Pr **1.22**	Pr **1.23**	Pr **1.24**	Pr **1.25**	Pr **1.26**	Pr **1.27**	Pr **1.28**
	Pr **1.36**	Pr **1.37**	Pr **1.39**					
Menu 2	Pr **2.01** = **{di03, 0.08}**	Pr **2.07**	Pr **2.11** **{SE04, 0.25}**	Pr **2.12**	Pr **2.13**	Pr **2.14**	Pr **2.15**	Pr **2.16**
	Pr **2.17**	Pr **2.18**	Pr **2.19**	Pr **2.21**	Pr **2.22**	Pr **2.23**	Pr **2.24**	Pr **2.25**
	Pr **2.26**	Pr **2.27**	Pr **2.28**	Pr **2.29**				
Menu 3	Pr **3.01** = **{di04, 0.39}**	Pr **3.02** = **{di05, 0.40}**	Pr **3.03**	Pr **3.10** = **{SP01, 0.61}**	Pr **3.18**	Pr **3.22**	Pr **3.27** = **{Fb09, 0.79}**	
Menu 4	Pr **4.01** = **{di08, 0.43}**	Pr **4.02**	Pr **4.08**	Pr **4.17**				
Menu 5	Pr **5.01**	Pr **5.03**	Pr **5.04**	Pr **5.07** = **{SE07, 0.28}**	Pr **5.08** = **{SE08, 0.29}**	Pr **5.24**	Pr **5.25**	
Menu 11	Pr **11.32**							
Menu 20	Pr **20.21**	Pr **20.22**	Pr **20.23**	Pr **20.24**	Pr **20.25**	Pr **20.26**	Pr **20.27**	Pr **20.28**
	Pr **20.29**	Pr **20.30**	Pr **20.31**	Pr **20.32**	Pr **20.33**	Pr **20.34**	Pr **20.35**	Pr **20.36**
	Pr **20.37**	Pr **20.38**	Pr **20.39**	Pr **20.40**				
Menu 21	Pr **21.01**	Pr **21.02**	Pr **21.04**	Pr **21.05**	Pr **21.07**	Pr **21.08**	Pr **21.14**	Pr **21.24**

Some of the parameters listed above are only 32 bit parameters in certain modes.

5.26.2 Solutions Module parameters

Some Solutions Modules contain 32 bit parameters. Below is a table listing these parameters and the modules in which they are 32 bit parameters

Table 5-12 32 bit Solution Module parameters

Parameter	Solutions modules in which the parameter is 32 bit
Pr **x.03**	SM-Universal Encoder Plus
Pr **x.20**	SM-Universal Encoder Plus
Pr **x.35**	All Fieldbus modules
Pr **x.48**	SM-Applications Plus

Table 5-13 32 bit SM-Applications Plus, SM-Applications and SM-Applications Lite parameters

Menu	32-bit parameters							
Menu 70 to Menu 75	Pr **70.00** to Pr **70.99**	Pr **71.00** to Pr **71.99**	Pr **72.00** to Pr **72.99**	Pr **73.00** to Pr **73.99**	Pr **74.00** to Pr **74.99**	Pr **75.00** to Pr **75.99**		
Menu 90	Pr **90.01**	Pr **90.03**	Pr **90.19**	Pr **90.25**	Pr **90.29**	Pr **90.31**	Pr **90.32**	Pr **90.33**
	Pr **90.34**	Pr **90.35**	Pr **90.37**	Pr **90.38**	Pr **90.49**			
Menu 91	Pr **91.02**	Pr **91.03**	Pr **91.04**	Pr **91.05**	Pr **91.06**	Pr **91.17**	Pr **91.18**	Pr **91.19**
	Pr **91.20**							
Menu 100 to Menu 105	Pr **100.00** to Pr **100.99**	Pr **101.00** to Pr **101.99**	Pr **102.00** to Pr **102.99**	Pr **103.00** to Pr **103.99**	Pr **104.00** to Pr **104.99**	Pr **105.00** to Pr **105.99**		
Menu 130 to Menu 135	Pr **130.00** to Pr **130.99**	Pr **131.00** to Pr **131.99**	Pr **132.00** to Pr **132.99**	Pr **133.00** to Pr **133.99**	Pr **134.00** to Pr **134.99**	Pr **135.00** to Pr **135.99**		
Menu 160 to Menu 165	Pr **160.00** to Pr **160.99**	Pr **161.00** to Pr **161.99**	Pr **162.00** to Pr **162.99**	Pr **163.00** to Pr **163.99**	Pr **164.00** to Pr **164.99**	Pr **165.00** to Pr **165.99**		

6 Serial communications protocol

6.1 ANSI communications protocol

6.1.1 Introduction

Mentor MP supports an ANSIx3.28 type comms protocol as supported by previous Control Techniques products with some modification to allow access to 32 bit parameters. This chapter describes the implementation of the protocol for Mentor MP.

6.1.2 Physical layer and UART

Attribute	Description
Physical layer	2 wire EIA485
Bit stream	Standard UART asynchronous symbols with Non Return to Zero (NRZ)
Symbol	Each symbol consists of: 1 start bit 7 data bits (ASCII) 1 parity bit (even parity) 1 stop bit
Baud rates	300, 600, 1200, 2400, 4800, 9600, 19200, 38400

6.1.3 Reading a parameter

The command to read a parameter is:

EOT	End of transmission (Ctl D)
A1	Drive address: 1st digit
A1	Drive address: 1st digit
A2	Drive address: 2nd digit
A2	Drive address: 2nd digit
M1	Menu number: 1st digit
M2	Menu number: 2nd digit
P1	Parameter number: 1st digit
P2	Parameter number: 2nd digit
ENQ	Enquiry (Ctl E)

If the message is correct and the parameter exists the response is:

STX	Start of text (Ctl B)
M1	Menu number: 1st digit
M2	Menu number: 2nd digit
P1	Parameter number: 1st digit
P2	Parameter number: 2nd digit
D1	Data: 1st digit
D2	Data: 2nd digit
-	
-	
Dn	Data: nth digit
ETX	End of text (Ctl C)
	Checksum

The length of the data field varies depending on the number of significant digits required to represent the value of the parameter. The maximum length is 12 digits including the sign and decimal point if present. The data field always starts with a sign, minus sign for negative numbers, or a plus sign for zero and positive numbers. The field may contain a decimal point, but this will not be before all the numbers in the field or after all the numbers in the field. The following examples demonstrate some possible data fields.

Value	Data field
0	+0 (parameter with no decimal places)
0	+0.00 (parameter with 2 decimal places)
1.2	+1.2
-345.78	-345.78
123456	+123456

If the parameter to be read does not exist the End of transmission character (Ctl D) is returned.

The checksum is derived by exclusive ORing the message byte together excluding the STX and the checksum, i.e. Checksum = M1 ^ M2 ^ P1^ P2 ^ D1 ^ D2 ^ ..... Dn ^ ETX. The checksum is an unsigned 8 bit value and if the checksum is less than 32 then 32 is added to the calculated checksum.

6.1.4 Writing to a parameter

The command to write to a parameter is:

EOT	End of transmission (Ctl D)
A1	Drive address: 1st digit
A1	Drive address: 1st digit
A2	Drive address: 2nd digit
A2	Drive address: 2nd digit
STX	Start of text (Ctl B)
M1	Menu number: 1st digit
M2	Menu number: 2nd digit
P1	Parameter number: 1st digit
P2	Parameter number: 2nd digit
D1	Data: 1st digit
D2	Data: 2nd digit
-	
-	
Dn	Data: nth digit
ETX	End of text (Ctl C)
	Checksum

The following rules apply to the data field:

1. The maximum length is 12 characters.
2. The field may contain leading spaces, but not after any other character.
3. A sign character is optional. No sign indicates positive.
4. A decimal point is optional. This can appear at any point in the data field, but not before the sign or before 10 numbers (i.e. the value written should not have more than 9 decimal places). If the decimal point is not in the same position as used by the parameter some accuracy may be lost or extra decimal places added (i.e. if +1.2345 is written to a parameter with one decimal place the result is +1.2, if +1.2 is written to a parameter with three decimal places the result is +1.200). It should be noted that parameters can only have 0, 1, 2, 3, 4, 5, or 6 decimal places.
5. The data field can contain up to 10 numbers, but the value even ignoring decimal points must not exceed the range -2^{31} to $2^{31}-1$.

If the parameter is written successfully an Acknowledge character (Ctl F) is returned. If the parameter does not exist, the value written exceeds the allowed parameter range or the data field rules are not obeyed an Not acknowledge character (Ctl U) is returned.

The checksum is derived by exclusive ORing the message byte together excluding the STX and the checksum, i.e. Checksum = M1 ^ M2 ^ P1^ P2 ^ D1 ^ D2 ^ ..... Dn ^ ETX. The checksum is an unsigned 8 bit value and if the checksum is less than 32 then 32 is added to the calculated checksum.

6.1.5 Drive address

The drive only acts on messages received that contain a drive address if the whole drive address or drive group address match the whole address or the group address in the message, or if the address in the message is 0 (i.e. a global message). Global or group addressing allows data to be written to more than one drive with one command. The drive does not give a response to a global or group write message. Although it is possible to perform a global or group read, this would result in messages crashing if more than one drive responds to the command.

Drive address	Message address	Command	Action
7.8	7.8	Read	Read
7.8	7.8	Write	Write
7.8	7.0	Read	Read
7.8	7.0	Write	Write with no response
7.8	0.0	Read	Read
7.8	0.0	Write	Write with no response

6.1.6 Short commands

The following short commands can be used:

NAK	Not acknowledge (Ctl U)

This is the same as requesting the value of the last parameter to be read or written to. The response is the same as for a normal read.

ACK	Acknowledge (Ctl F)

This is the same as requesting the value of the parameter after the last parameter to be read or written to. The response is the same as for a normal read.

BS	Back space (Ctl H)

This is the same as requesting the value of the parameter before the last parameter to be read or written to. The response is the same as for a normal read.

STX	Start of text (Ctl B)
M1	Menu number: 1st digit
M2	Menu number: 2nd digit
P1	Parameter number: 1st digit
P2	Parameter number: 2nd digit
D1	Data: 1st digit
D2	Data: 2nd digit
-	
-	
Dn	Data: nth digit
ETX	End of text (Ctl C)
	Checksum

Writes to the specified parameter at the same drive address as used by the last read or write.

All the short commands will only read from the drive or write to the drive if a valid address has already been sent to the drive in a previous command. The address is registered as being valid once a read or write command has been completed provide the address was valid for the drive even if the parameter does not exist. The valid address is cancelled if a message is received for a non-valid address or one of the following occurs:

1. The command is aborted because a non-numerical value is received in the drive address, menu or parameter numbers.
2. The command is aborted because the two digits for drive address 1st digit, drive address 2nd digit, menu number or parameter number are not the same as each other.
3. EOT is received.
4. A character other than NAK, ACK, BS or STX is sent as a short command.
5. A character other than ENQ is sent at the end of a read command.

6.1.7 Summary of control characters

		ASCII code	Ctl code
STX	Start of text	02	B
ETX	End of text	03	C
EOT	End of transmission	04	D
ENQ	Enquiry	05	E
ACK	Acknowledge	06	F
BS	Back space	08	H
NAK	Not acknowledge	15	U

6.2 CT Modbus RTU specification

This section describes the adaptation of the MODBUS RTU protocol offered on Control Techniques' products. The portable software class which implements this protocol is also defined.

MODBUS RTU is a master slave system with half-duplex message exchange. The Control Techniques (CT) implementation supports the core function codes to read and write registers. A scheme to map between MODBUS registers and CT parameters is defined. The CT implementation also defines a 32bit extension to the standard 16bit register data format.

6.2.1 MODBUS RTU

Physical layer

Attribute	Description
Normal physical layer for multi-drop operation	EIA485 2 wire
Bit stream	Standard UART asynchronous symbols with Non Return to Zero (NRZ)
Symbol	Each symbol consists of:- 1 start bit 8 data bits (transmitted least significant bit first) 2 stop bits
Baud rates	300, 600, 1200,2400,4800, 9600, 19200, 38400, 57600, 115200

RTU framing

The frame has the following basic format

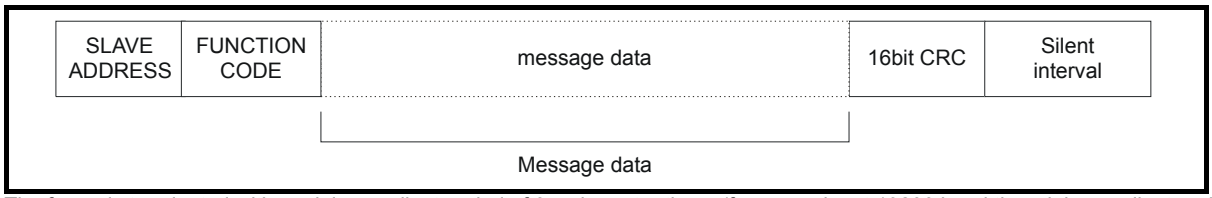

The frame is terminated with a minimum silent period of 3.5 character times (for example, at 19200 baud the minimum silent period is 2 ms). Nodes use the terminating silence period to detect the end of frame and begin frame processing. All frames must therefore be transmitted as a continuous stream without any gaps greater or equal to the silence period. If an erroneous gap is inserted then receiving nodes may start frame processing early in which case the CRC will fail and the frame will be discarded.

MODBUS RTU is a master slave system. All master requests, except broadcast requests, will lead to a response from an individual slave. The slave will respond (i.e. start transmitting the response) within the quoted maximum slave response time (this time is quoted in the data sheet for all Control Techniques products). The minimum slave response time is also quoted but will never be less that the minimum silent period defined by 3.5 character times.

If the master request was a broadcast request then the master may transmit a new request once the maximum slave response time has expired.

The master must implement a message time out to handle transmission errors. This time out period must be set to the maximum slave response time + transmission time for the response.

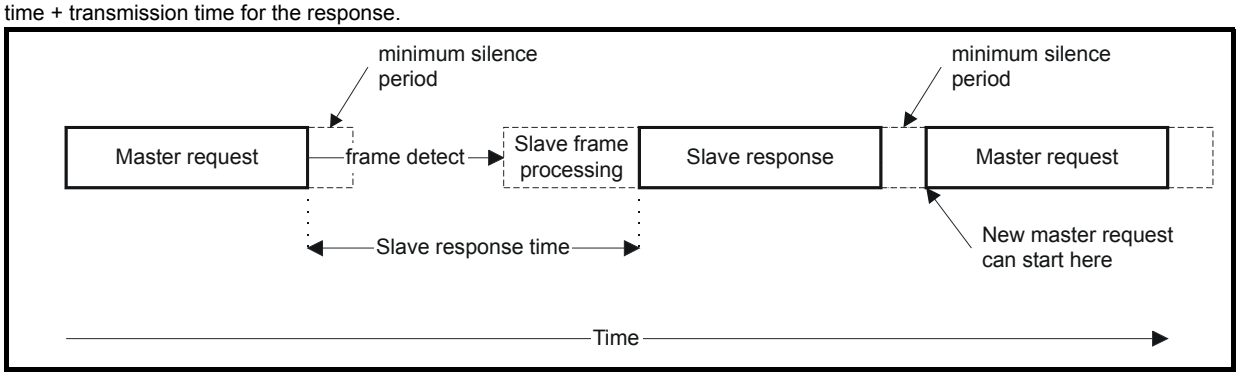

6.2.2 Slave address

The first byte of the frame is the slave node address. Valid slave node addresses are 1 through 247 decimal. In the master request this byte indicates the target slave node; in the slave response this byte indicates the address of the slave sending the response.

Global addressing

Address zero addresses all slave nodes on the network. Slave nodes suppress the response messages for broadcast requests.

6.2.3 MODBUS registers

The MODBUS register address range is 16bit (65536 registers) which at the protocol level is represented by indexes 0 through 65535.

PLC registers

Modicon PLCs typically define 4 register 'files' each containing 65536 registers. Traditionally, the registers are referenced 1 through 65536 rather than 0 through 65535. The register address is therefore decremented on the master device before passing to the protocol.

File type	Description
1	Read only bits ("coil")
2	Read / write bits ("coil")
3	Read only 16bit register
4	Read / write 16bit register

The register file type code is NOT transmitted by MODBUS and all register files can be considered to map onto a single register address space. However, specific function codes are defined in MODBUS to support access to the "coil" registers.

All standard CT drive parameters are mapped to register file '4' and the coil function codes are not required.

CT parameter mapping

All CT products are parameterized using the #menu.param notation. Indexes 'menu' and 'param' are in the range 0 through 99. The #menu.param is mapped into the MODBUS register space as menu*100 + param.

To correctly map the parameters at the application layer, the slave device increments the received register address. The consequence of this behavior is that #0.0 cannot be accessed.

CT parameter	MODBUS PLC register	Register address (protocol level)	Comments
#X.Y	40000 + X x 100 + Y	X x 100 + Y - 1	#0.0 cannot be accessed
Examples:			
#1.2	40102	101	
#1.0	40100	99	
#0.1	40001	0	
#70.0	47000	6999	

Data types

The MODBUS protocol specification defines registers as 16bit signed integers. All CT devices support this data size.

Refer to the section 6.2.7 *Extended data types* on page 208 for detail on accessing 32bit register data.

6.2.4 Data consistency

All CT devices support a minimum data consistency of one parameter (16bit or 32bit data). Some devices support consistency for a complete multiple register transaction.

6.2.5 Data encoding

MODBUS RTU uses a 'big-endian' representation for addresses and data items (except the CRC, which is 'little-endian'). This means that when a numerical quantity larger than a single byte is transmitted, the MOST significant byte is sent first. So for example

16 - bits	0x1234	would be	0x12	0x34		
32 - bits	0x12345678	would be	0x12	0x34	0x56	0x78

6.2.6 Function codes

The function code determines the context and format of the message data. Bit 7 of the function code is used in the slave response to indicate an exception.

The following function codes are supported:

Code	Description
3	Read multiple 16bit registers
6	Write single register
16	Write multiple 16bit registers
23	Read and write multiple 16bit registers

FC03 Read multiple

Read a contiguous array of registers. The slave imposes an upper limit on the number of registers, which can be read. If this is exceeded the slave will issue an exception code 2.

Table 6-1 Master request

Byte	Description
0	Slave destination node address 1 through 247, 0 is global
1	Function code 0x03
2	Start register address MSB
3	Start register address LSB
4	Number of 16bit registers MSB
5	Number of 16bit registers LSB
6	CRC LSB
7	CRC MSB

Table 6-2 Slave response

Byte	Description
0	Slave source node address
1	Function code 0x03
2	Length of register data in read block (in bytes)
3	Register data 0 MSB
4	Register data 0 LSB
3+byte count	CRC LSB
4+byte count	CRC MSB

FC06 Write single register

Writes a value to a single 16bit register. The normal response is an echo of the request, returned after the register contents have been written. The register address can correspond to a 32bit parameter but only 16 bits of data can be sent.

Table 6-3 Master request

Byte	Description
0	Slave node address 1 through 247 0 is global
1	Function code 0x06
2	Register address MSB
3	Register address LSB
4	Register data MSB
5	Register data LSB
6	CRC LSB
7	CRC MSB

Table 6-4 Slave response

Byte	Description
0	Slave source node address
1	Function code 0x06
2	Register address MSB
3	Register address LSB
4	Register data MSB
5	Register data LSB
6	CRC LSB
7	CRC MSB

FC16 Write multiple

Writes a contiguous array of registers. The slave imposes an upper limit on the number of registers which can be written. If this is exceeded the slave will discard the request and the master will time out.

Table 6-5 Master request

Byte	Description
0	Slave node address 1 through 247, 0 is global
1	Function code 0x10
2	Start register address MSB
3	Start register address LSB
4	Number of 16bit registers MSB
5	Number of 16bit registers LSB
6	Length of register data to write (in bytes)
7	Register data 0 MSB
8	Register data 0 LSB
7+byte count	CRC LSB
8+byte count	CRC MSB

Table 6-6 Slave response

Byte	Description
0	Slave source node address
1	Function code 0x10
2	Start register address MSB
3	Start register address LSB
4	Number of 16bit registers written MSB
5	Number of 16bit registers written LSB
6	CRC LSB
7	CRC MSB

FC23 Read/Write multiple

Writes and reads two contiguous arrays of registers. The slave imposes an upper limit on the number of registers which can be written. If this is exceeded the slave will discard the request and the master will time out.

Table 6-7 Master request

Byte	Description
0	Slave node address 1 through 247 0 is global
1	Function code 0x17
2	Start register address to read MSB
3	Start register address to read LSB
4	Number of 16bit registers to read MSB
5	Number of 16bit registers to read LSB
6	Start register address to write MSB
7	Start register address to write LSB
8	Number of 16bit registers to write MSB
9	Number of 16bit registers to write LSB
10	Length of register data to write (in bytes)
11	Register data 0 MSB
12	Register data 0 LSB
11+byte count	CRC LSB
12+byte count	CRC MSB

Table 6-8 Slave response

Byte	Description
0	Slave source node address
1	Function code 0x17
2	Length of register data in read block (in bytes)
3	Register data 0 MSB
4	Register data 0 LSB
3+byte count	CRC LSB
4+byte count	CRC MSB

6.2.7 Extended data types

Standard MODBUS registers are 16bit and the standard mapping maps a single #X.Y parameter to a single MODBUS register. To support 32bit data types (integer and float) the MODBUS multiple read and write services are used to transfer a contiguous array of 16bit registers.

Slave devices typically contain a mixed set of 16bit and 32bit registers. To permit the master to select the desired 16bit or 32bit access the top two bits of the register address are used to indicate the selected data type.

NOTE

The selection is applied for the whole block access.

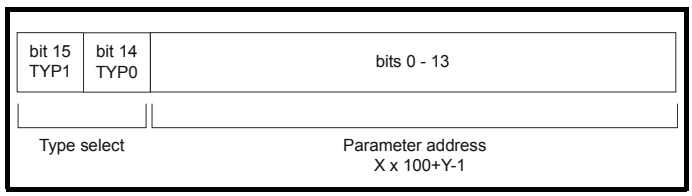

The 2bit type field selects the data type according to the table below:

Type field bits 15-14	Selected data type	Comments
00	INT16	backward compatible
01	INT32	
10	Float32	IEEE754 standard Not supported on all slaves
11	Reserved	

If a 32bit data type is selected then the slave uses two consecutive 16bit MODBUS registers (in 'big endian'). The master must also set the correct 'number of 16bit registers'.

Example, read #20.21 through #20.24 as 32bit parameters using FC03 from node 8:

Table 6-9 Master request

Byte	Value	Description
0	0x08	Slave destination node address
1	0x03	FC03 multiple read
2	0x47	Start register address #20.21 (16384 + 2021 - 1) = 18404 = 0x47E4
3	0xE4	
4	0x00	Number of 16bit registers to read #20.21 through #20.24 is 4x32bit registers = 8x16bit registers
5	0x08	
6	CRC LSB	
7	CRC MSB	

Table 6-10 Slave response

Byte	Value	Description
0	0x08	Slave destination node address
1	0x03	FC03 multiple read
2	0x10	Length of data (bytes) = 4x32bit registers = 16bytes
3-6		#20.21 data
7-10		#20.22 data
11-14		#20.23 data
15-18		#20.24 data
19	CRC LSB	
20	CRC MSB	

Reads when actual parameter type is different from selected

The slave will send the least significant word of a 32 bit parameter if that parameter is read as part of a 16 bit access.

The slave will sign extend the least significant word if a 16 bit parameter is accessed as a 32 bit parameter. The number of 16 bit registers must be even during a 32 bit access.

Example, If #1.28 is a 32 bit parameter with a value of 0x12345678, #1.29 is a signed 16 bit parameter with a value of 0xABCD, and #1.30 is a signed 16 bit parameter with a value of 0x0123.

Read	Start register address	Number of 16bit registers	Response	Comments
#1.28	127	1	0x5678	Standard 16 bit access to a 32bit register will return low 16bit word of truncated data
#1.28	16511	2	0x12345678	Full 32bit access
#1.28	16511	1	Exception 2	Number of words must be even for 32bit access
#1.29	128	1	0xABCD	Standard 16 bit access to a 32bit register will return low 16bit word of data
#1.29	16512	2	0xFFFFABCD	32bit access to a 16bit register will return 32bit sign extended data
#1.30	16513	2	0x00000123	32bit access to a 16bit register will return 32bit sign extended data
#1.28 - #1.29	127	2	0x5678, 0xABCD	Standard 16 bit access to a 32bit register will return low 16bit word of truncated data
#1.28 - #1.29	16511	4	0x12345678, 0xFFFFABCD	Full 32bit access

Writes when actual parameter type is different from selected

The slave will allow writing a 32 bit value to a 16 bit parameter as long as the 32 bit value is within the normal range of the 16 bit parameter.

The slave will allow a 16 bit write to a 32 bit parameter. The slave will sign extend the written value, therefore, the effective range of this type of write will be ±32767.

Examples, if #1.28 has a range of ±100000, and #1.29 has a range of ±10000.

Write	Start register address	Number of 16bit registers	Data	Comments
#1.28	127	1	0x1234	Standard 16 bit write to a 32bit register. Value written = 0x00001234
#1.28	127	1	0xABCD	Standard 16 bit write to a 32bit register. Value written = 0xFFFFABCD
#1.28	16511	2	0x00001234	Value written = 0x00001234
#1.29	128	1	0x0123	Value written = 0x0123
#1.29	16512	2	0x00000123	Value written = 0x00000123

6.2.8 Exceptions

The slave will respond with an exception response if an error is detected in the master request. If a message is corrupted and the frame is not received or the CRC fails then the slave will not issue an exception. In this case the master device will time out. If a write multiple (FC16 or FC23) request exceeds the slave maximum buffer size then the slave will discard the message. No exception will be transmitted in this case and the master will time out.

Exception message format

The slave exception message has the following format.

Byte	Description
0	Slave source node address
1	Original function code with bit7 set
2	Exception code
3	CRC LSB
4	CRC MSB

Exception codes

The following exception codes are supported.

Code	Description
1	Function code not supported
2	Register address out of range, or request to read too many registers

Parameter over range during block write FC16

The slave processes the write block in the order the data is received. If a write fails due to an out of range value then the write block is terminated. However, the slave does not raise an exception response, rather the error condition is signalled to the master by the number of successful writes field in the response.

Parameter over range during block read/write FC23

There will be no indication that there has been a value out of range during a FC23 access.

6.2.9 CRC

The CRC is a 16bit cyclic redundancy check using the standard CRC-16 polynomial x16 + x15 + x2 + 1. The 16bit CRC is appended to the message and transmitted LSB first.

The CRC is calculated on ALL the bytes in the frame.

6.2.10 Device compatibility parameters

All devices have the following compatibility parameters defined:

Parameter	Description
Device ID	Unique device identification code
Minimum slave response time	
Maximum slave response time	When global addressing, the master must wait for this time before issuing a new message. In a network of devices, the slowest time must be used
Maximum baud rate	
32bit float data type supported	If this data type is not supported then an over range error will be raised if this data type is used
Maximum buffer size	Determines the maximum block size.

7 Performance

7.1 Digital speed reference

Table 7-1 Accuracy and resolution

	Preset	Precision
Accuracy	0.01 %*	0.01 %*
Resolution	0.1 rpm	0.001 rpm

*0.01 % of the reference

7.2 Analog reference

Table 7-2 Update rates

		Pr 1.36 / Pr 1.37	Pr 4.08	Pr 3.22	Other
All kHz	**Analog input 1**	250 µs*	4 ms*	250 µs*	4 ms*
	Analog input 2 / 3	250 µs	250 µs	250 µs	4 ms

* Analog input 1 is subject to a window filter as defined in Pr **7.26**.

Table 7-3 Resolution

Analog input 1	16 bits plus sign*
Analog input 2 / 3	10 bit plus sign

*16 bit plus sign as a speed reference, resolution = Pr **7.26** x 500 x 10^3 .

7.3 Analog outputs

Table 7-4

Resolution (voltage mode)	10 bit plus sign
Resolution (current mode)	10bit
Update rate	4 ms
Update rate (high speed update - voltage mode only)*	250 µs

*When sourced from Pr **4.02**, Pr **4.17** in any mode and Pr **3.02 = {di05, 0.40}**, Pr **5.03** in closed-loop.

7.4 Digital inputs and outputs

Table 7-5 Response times

Terminals	Pr 6.35 / Pr 6.36 (Limit switches)	Other
24-26 as input	250 µs	4 ms
24-26 as output	4 ms	4 ms
27-29	250 µs	4 ms
31 (enable)	-	4 ms*
31 (disable)	-	<100 µs
Relay output closing	4 ms*	4 ms*
Relay output opening	4 ms*	4 ms*

*software only

7.5 Current feedback

Accuracy: 5 %
Resolution: 10 bit plus sign
Full scale resolution is equivalent to 222 % drive rated current (A_{DC})

7.6 Bandwidth

7.6.1 Speed loop

The speed loop bandwidth is 10 Hz.

7.6.2 Current loop

The current loop bandwidth is 100 Hz.

Index

Numerics

32 bit parameters 203
4 -20mA 111

A

Acceleration rate selector 37
Accuracy 41
Active current 60
Advanced parameter descriptions 21
Alarm 13
Analog I/O 108
Analog reference 1 31
Analog reference resolution 41
ANSI communications protocol 204
Application menu 1 187
Application menu 2 188
Application menu 3 189
Armature active 130
At speed 130
At speed lower limit 44
At speed upper limit 44, 45
Auto-reset attempts 140
Autotune 75

B

Bandwidth 48
Bandwidth set-up 48
Baud rate 146
Binary sum 127
Bipolar reference enable 27
Brake control function 160

C

Catch a spinning motor 100
Coding 17
Coiler/uncoiler mode 62
Control word 105, 106, 107
Current control 58
Current controller Ki gain 64
Current controller Kp gain 63
Current limit 60

D

Damping factor 48
DC bus voltage 73
Deceleration rate selector 38
Destinations 19
Digital I/O 1 source/destination 120
Digital I/O 2 source/destination 120
Digital I/O 3 source/destination 120
Digital I/O read word 119
Digital input 115
Digital input 4 destination 120
Digital input 5 destination 120
Digital input 6 destination 120
Digital output 115
Digital reference resolution 41
Direction commanded 131
Direction running 131
Display 9
Display - special functions 14
Drive OK 130
Drive reset 14, 140
Drive warning 131

E

Edit mode 11
Encoder error detection level 52
Encoder filter 53
Encoder lines per revolution 51
Encoder position 50
Encoder supply voltage 51
Encoder type 51
Energy meter 102
External trip 140

H

Hard speed reference 48
Hard speed reference update rate 20
High dynamic performance enable 77

I

Inertia compensation enable 65
Inertia compensation torque 40

J

Jog acceleration rate 38
Jog deceleration rate 39
Jog reference 24

K

Keypad 9
Keypad control 14
Keypad control mode reference 29

L

Limit switch 104
Load reached 130

M

Maximum reference clamp 24
Menu 0 145
Menu 0 (linear) 7
Menu 0 copying 7
Menu 01 - Speed reference 22
Menu 02 - Ramps 34
Menu 03 - Slave frequency, speed feedback, speed control ..41
Menu 04 - Torque and current control 58
Menu 05 - Motor control 70
Menu 06 - Sequencer and clock 97
Menu 07 - Analog I/O 108
Menu 08 - Digital I/O 115
Menu 09 - Programmable logic, motorised pot and binary sum 122
Menu 10 - Status and trips 130
Menu 11 - General drive set-up 145
Menu 12 - Threshold detectors and variable selectors 160
Menu 13 - Position control 172
Menu 14 - User PID controller 180
Menu 15, 16 and 17 - Solutions Module slots 186
Menu 18 - Application menu 1 187
Menu 19 - Application menu 2 188
Menu 20 - Application menu 3 189
Menu 21 - Second motor parameters 190
Menu 22 - Additional menu 0 set up 198
Menu structure 5
Minimum reference clamp 25
Motor 2 parameters select 153
Motor control 70
Motor object electronic nameplate transfer 54
Motor rated current 73
Motor rpm 73
Motor saturation breakpoint 78
Motor torque per amp (Kt) 79
Motorised pot 124

N

Non-rigid position control 175
Number of motor poles 74

O

Open collector output 120
Orientation on stop 175
Output power 72
Output voltage 72
Overload accumulator 65
Overload alarm 131

P

Parameter - description format 17
Parameter navigation 5
Parameter structure 5
Parameter view mode 11
Parameter x.00 15
PID controller 180
Position controller 174
Position controller mode 175
Position controller P gain 175
Powered-up time 101
Precision reference 29
Preset reference selected indicator 32
Preset selector 28
Programmable logic 122

R

Ramp enable 36
Ramps 34
Ranges 18
Rated frequency 74
Rated voltage 74
Reference offset 24
Reference selected indicator 32
Reference selector 27
Regenerating 131
Relative jogging 176
Relay source 120
Resolution 41
Revolution counter 49
Rigid position control 175
Run time 102
Running cost 102

S

S ramp 36
Second motor parameters 14, 190
Security code 147
Security status 152
Sequencer 97
Sequencing bit 103
Serial communications protocol 204
Serial mode 145
Skip reference 1 30
SMARTCARD 148
Software sub-version 148
Software version 147
Solutions Module ID codes 186
Solutions Module slots 186
Sources 19
Speed feedback selector 49
Speed reference 22
Stator inductance 77
Status mode 11
Status word 141
Stop mode 98
Sub blocks 6

T

Thermal protection mode 64
Thermal time constant 64
Threshold detector 1 160
Threshold detector 2 160
Threshold detectors 160
Torque control 61
Torque control with speed override 62
Torque demand 60
Torque feed-forward 63
Torque mode selector 61
Torque offset 61
Torque reference 61
Torque reference update 20
Transient inductance 77

U

Update rate 19
US defaults 16

V

Variable maximums 18
Variable selector 1 162
Variable selector 2 162
Variable selectors 160
Velocity feed forward 176
Velocity feed-forward reference 31
Voltage mode select 76
Voltage rating 147

W

Wire break detect 52

Z

Zero speed 130
Zero speed threshold 44

0476-0002-04