EDSVS9332P
13440811

Global Drive

System Manual

9300 *0.37 ... 75 kW*

EVS9321xP ... EVS9332xP

Servo position controller

Lenze

1 Preface 1-1

1.1 How to use this System Manual 1.1-1

1.1.1 Information provided by the System Manual 1.1-1

1.1.2 Products to which the System Manual applies 1.1-3

1.1.3 Document history 1.1-4

1.2 Legal regulations 1.2-1

2 Safety instructions 2-1

2.1 General safety information 2.1-1

2.2 Thermal motor monitoring 2.2-1

2.2.1 Forced ventilated or naturally ventilated motors 2.2-2

2.2.2 Self-ventilated motors 2.2-3

2.3 Residual hazards 2.3-1

2.4 Safety instructions for the installation according to UL 2.4-3

3 Technical data 3-1

3.1 General data and operating conditions 3.1-1

3.2 Open and closed loop control 3.2-1

3.3 Rated data 3.3-1

3.3.1 Operation at 400 V 3.3-1

3.3.2 Operation at 480 V 3.3-2

3.3.3 Overcurrent operation 3.3-4

3.4 Current characteristics 3.4-1

4 Installation of the standard device 4-1
4.1 Standard devices in the power range 0.37 ... 11 kW 4.1-1
4.1.1 Important notes 4.1-1
4.1.2 Mounting with fixing rails (standard) 4.1-2
4.1.3 Thermally separated mounting (push-through technique) . 4.1-3
4.1.4 Mounting in ”cold plate” technique 4.1-4
4.2 Standard devices in the power range 15 ... 30 kW 4.2-1
4.2.1 Important notes 4.2-1
4.2.2 Mounting with fixing brackets (standard) 4.2-2
4.2.3 Thermally separated mounting (push-through technique) . 4.2-3
4.2.4 Mounting in ”cold plate” technique 4.2-4
4.3 Standard devices with a power of 45 kW 4.3-1
4.3.1 Important notes 4.3-1
4.3.2 Mounting with fixing brackets (standard) 4.3-2
4.3.3 Thermally separated mounting (push-through technique) . 4.3-3
4.3.4 Modification of the fan module for push-through technique 4.3-4
4.4 Standard devices in the power range 55 ... 75 kW 4.4-1
4.4.1 Important notes 4.4-1
4.4.2 Mounting with fixing brackets (standard) 4.4-2
4.4.3 Thermally separated mounting (push-through technique) . 4.4-3

5 Wiring of the standard device 5-1

5.1 Important notes 5.1-1
5.1.1 Protection of persons 5.1-1
5.1.2 Device protection 5.1-3
5.1.3 Motor protection 5.1-3

5.2 Notes on project planning 5.2-1
5.2.1 Supply forms / electrical supply conditions 5.2-1
5.2.2 Operation on public supply systems (EN 61000-3-2) 5.2-1
5.2.3 Controllers in the IT system 5.2-2
5.2.4 Operation at earth-leakage circuit breaker (e.l.c.b.) 5.2-3
5.2.5 Interaction with compensation equipment 5.2-3
5.2.6 Discharge current for mobile systems 5.2-4
5.2.7 Optimisation of the controller and mains load 5.2-5
5.2.8 Reduction of noise emissions 5.2-6
5.2.9 Mains choke/mains filter assignment 5.2-7
5.2.10 Motor cable 5.2-8

5.3 Basics for wiring according to EMC 5.3-1
5.3.1 Shielding 5.3-1
5.3.2 Mains connection, DC supply 5.3-1
5.3.3 Motor cable 5.3-1
5.3.4 Control cables 5.3-3
5.3.5 Installation in the control cabinet 5.3-4
5.3.6 Wiring outside of the control cabinet 5.3-5
5.3.7 Detecting and eliminating EMC interferences 5.3-6

5.4 Standard devices in the power range 0.37 ... 11 kW 5.4-1
5.4.1 Wiring according to EMC (CE-typical drive system) 5.4-1
5.4.2 Important notes 5.4-3
5.4.3 Mains connection, DC supply 5.4-4
5.4.4 Mains connection: Fuses and cable cross-sections 5.4-6
5.4.5 Mains choke/mains filter assignment 5.4-7
5.4.6 Motor connection 5.4-8

5.5 Standard devices in the power range 15 ... 30 kW 5.5-1
5.5.1 Wiring according to EMC (CE-typical drive system) 5.5-1
5.5.2 Important notes 5.5-3
5.5.3 Mains connection, DC supply 5.5-3
5.5.4 Mains connection: Fuses and cable cross-sections 5.5-5
5.5.5 Mains choke/mains filter assignment 5.5-6
5.5.6 Motor connection 5.5-7

5.6 Standard devices with a power of 45 kW 5.6-1
5.6.1 Wiring according to EMC (CE-typical drive system) 5.6-1
5.6.2 Important notes 5.6-3
5.6.3 Mains connection, DC supply 5.6-3
5.6.4 Mains connection: Fuses and cable cross-sections 5.6-5
5.6.5 Mains choke/mains filter assignment 5.6-6
5.6.6 Motor connection 5.6-7
5.7 Standard devices in the power range 55 ... 75 kW 5.7-1
5.7.1 Wiring according to EMC (CE-typical drive system) 5.7-1
5.7.2 Important notes 5.7-3
5.7.3 Mains connection, DC supply 5.7-3
5.7.4 Mains connection: Fuses and cable cross-sections 5.7-5
5.7.5 Mains choke/mains filter assignment 5.7-6
5.7.6 Motor connection 5.7-7
5.8 Control terminals 5.8-1
5.8.1 Important notes 5.8-1
5.8.2 Connection terminal of the control card 5.8-3
5.8.3 Device variant without ”Safe torque off” function 5.8-4
5.8.4 Device variant with ”Safe torque off” function 5.8-5
5.8.5 State bus 5.8-8
5.8.6 Terminal assignment 5.8-9
5.8.7 Technical data 5.8-10
5.9 Wiring of the system bus (CAN) 5.9-1
5.10 Wiring of the feedback system 5.10-1
5.10.1 Important notes 5.10-1
5.10.2 Resolver at X7 . . . . . 5.10-2
5.10.3 Incremental encoder with TTL level at X8 . . . . . 5.10-3
5.10.4 SinCos encoder at X8 . . . . . 5.10-4
5.11 Wiring of digital frequency input / digital frequency output 5.11-1

6 Commissioning 6-1

6.1 Important notes 6.1-1

6.2 Before switching on 6.2-1

6.3 Switch-on sequence 6.3-1

6.3.1 Sequence diagram 6.3-1

6.3.2 Commissioning steps 6.3-2

6.4 Controller inhibit 6.4-1

6.5 Basic settings 6.5-1

6.5.1 Changing the basic configuration 6.5-1

6.5.2 Adapting the controller to the mains 6.5-1

6.5.3 Entry of gearbox factors and feed constants 6.5-2

6.5.4 Entry of motor data 6.5-3

6.5.5 Motor selection list 6.5-6

6.5.6 Motor temperature monitoring with PTC or thermal contact 6.5-12

6.5.7 Motor temperature monitoring with KTY 6.5-13

6.6 Setting the speed feedback 6.6-1

6.6.1 Resolver at X7 . . . . . 6.6-1

6.6.2 Incremental encoder with TTL level at X8 . . . . . 6.6-1

6.6.3 SinCos encoder at X8 . . . . . 6.6-2

6.7 Current controller adjustment 6.7-1

6.8 Adjusting the rotor position 6.8-1

6.9 Changing the assignment of the control terminals X5 and X6 . . . . . 6.9-1

6.9.1 Free configuration of digital input signals 6.9-1

6.9.2 Free configuration of digital outputs 6.9-2

6.9.3 Free configuration of analog input signals 6.9-3

6.9.4 Free configuration of analog outputs 6.9-4

6.10 Manual control 6.10-1

6.10.1 Setting of manual control parameters 6.10-1

6.10.2 Checking the configuration 6.10-2

6.11 Travel profile parameters 6.11-1

6.11.1 Description of the positioning program 6.11-1

6.11.2 Structure of the travel profile 6.11-1

6.11.3 Entering parameters 6.11-4

6.12 Parameter set management 6.12-1

6.12.1 Saving of parameter set 6.12-1

6.12.2 Loading a parameter set 6.12-3

6.13 Homing 6.13-1

6.13.1 Setting the homing parameters 6.13-1

6.13.2 Manual homing 6.13-3

6.14 Controlling the drive 6.14-1

6.15 Automatic control parameter identification 6.15-1
6.15.1 Important notes 6.15-1
6.15.2 Description 6.15-1
6.15.3 Sequence diagram 6.15-3
6.15.4 Troubleshooting 6.15-4
6.16 Commissioning examples 6.16-1

7 Parameter setting 7-1
7.1 Important notes 7.1-1
7.2 Parameter setting with the XT EMZ9371BC keypad 7.2-1
7.2.1 General data and operating conditions 7.2-1
7.2.2 Installation and commissioning 7.2-2
7.2.3 Display elements and function keys 7.2-2
7.2.4 Changing and saving parameters 7.2-4
7.2.5 Loading a parameter set 7.2-6
7.2.6 Transferring parameters to other standard devices 7.2-7
7.2.7 Activating password protection 7.2-9
7.2.8 Diagnostics 7.2-10
7.2.9 Menu structure 7.2-11

8 Configuration 8-1
8.1 Important notes 8.1-1
8.2 Monitoring 8.2-1
8.2.1 Fault responses 8.2-1
8.2.2 Setting of responses 8.2-2
8.2.3 Monitoring times for process data input objects 8.2-3
8.2.4 Maximum speed 8.2-4
8.2.5 Motor 8.2-4
8.2.6 Controller current load (I x t monitoring) 8.2-5
8.2.7 Motor temperature 8.2-6
8.2.8 Current load of motor (I2 x t monitoring: OC6, OC8) 8.2-7
8.2.9 Heatsink temperature 8.2-10
8.2.10 DC-bus voltage 8.2-11
8.2.11 External error (EEr) 8.2-11
8.3 Overview of monitoring functions 8.31
8.4 Code table 8.5-1
8.5 Basic configurations 8.5-1
8.6 Selection lists 8.6-1
8.6.1 Selection list 1: Analog output signals 8.6-1
8.6.2 Selection list 2: Digital output signals 8.6-3
8.6.3 Selection list 3: Angle signals 8.6-8
8.6.4 Selection list 4: Speed signals 8.6-9
8.6.5 Selection list 5: Function blocks 8.6-10
8.6.6 Selection list 10: Error messages 8.6-12
8.7 Table of attributes 8.7-1

9 Troubleshooting and fault elimination 9-1
9.1 Display of operating data, diagnostics 9.1-1
9.2 Troubleshooting 9.2-1
9.2.1 Status display via controller LEDs 9.2-1
9.2.2 Fault analysis with the history buffer 9.2-1
9.2.3 Fault analysis via LECOM status words (C0150/C0155) 9.2-3
9.3 System error messages 9.3-1
9.3.1 General error messages 9.3-1
9.3.2 Resetting system error messages 9.3-8

10 DC-bus operation 10-1
10.1 Function 10.1-1
10.2 Conditions for trouble-free DC-bus operation 10.2-1
10.3 Fuses and cable cross-sections 10.3-1
10.4 Distributed supply (several supply points) 10.4-1
10.5 Central supply (one supply point) 10.5-1

11 Safety engineering 11-1
11.1 Important notes 11.1-1
11.2 Operating mode 11.2-1
11.3 Safety relay KSR 11.3-1
11.4 Wiring 11.4-1
11.5 Functional test 11.5-1
11.5.1 Important notes 11.5-1
11.5.2 Manual safety function check 11.5-2
11.5.3 Monitoring the safety function with a PLC 11.5-3

12 Accessories (overview) 12-1
12.1 General accessories 12.1-1
12.2 Type-specific accessories 12.2-1

13 Appendix 13-1
13.1 Glossary 13.1-1
13.1.1 Terminology and abbreviations used 13.1-1
13.2 Index 13.2-1

1 Preface

Contents

1.1 How to use this System Manual 1.1-1
1.1.1 Information provided by the System Manual 1.1-1
1.1.2 Products to which the System Manual applies 1.1-3
1.1.3 Document history 1.1-4
1.2 Legal regulations 1.2-1

1.1 How to use this System Manual

1.1.1 Information provided by the System Manual

Target group

This System Manual addresses to all persons who dimension, install, commission, and set 9300 servo position controllers.

Together with the System Manual (extension), document number EDSVS9332P-EXT, and the catalogue, it provides the basis for project planning for the mechanical engineer and the plant constructor.

Contents

The System Manual provides the basis for the description of the 9300 servo position controller. Together with the System Manual (extension), document number EDSVS9332P-EXT, a complete System Manual is available:

- ► The features and functions are described in detail.
- ► The parameterisation for typical applications is explained by the use of examples.
- ► In case of doubt, the Mounting Instructions supplied with the 9300 servo position controller are always valid.

Contents of System Manual	Contents of the System Manual (extension)
1 Preface	1 Preface
2 Safety	-
3 Technical data	-
4 Mounting the standard device	-
5 Wiring the standard device	-
6 Commissioning	-
7 Parameter setting	-
8 Configuration	2 Configuration
8.1 Monitoring	2.1 Configuration with Global Drive Control
8.2 Monitoring functions	2.2 Basic configuration
8.3 Code table	2.3 Operating modes
8.4 Selection lists	
8.5 Table of attributes	
-	3 Function library
-	4 Application examples
9 Troubleshooting and fault elimination	-
10 DC-bus operation	-
11 Safety engineering	-
12 Accessories	-
13 Appendix	5 Appendix

How to find information

Use the System Manual as the basis. It contains references to the corresponding chapters in the System Manual Supplement:

- ► Each chapter is a complete unit and comprehensively informs about a subject.
- ► The Table of Contents and Index help you to find all information about a certain topic.
- ► Descriptions and data of other Lenze products (Drive PLC, Lenze geared motors, Lenze motors, ...) can be found in the corresponding catalogs, Operating Instructions and manuals. The required documentation can be ordered at your Lenze sales partner or downloaded as PDF file from the Internet.

Tip!

Information and auxiliary devices related to the Lenze products can be found in the download area at

http://www.Lenze.com

1.1.2 Products to which the System Manual applies

This documentation is valid for 9300 servo position controllers from nameplate data:

	①						②	③	Nameplate
	EVS	93xx	–	x	x	Vxx	6x	8x	

Product range

EVS = servo controller

Type no. / rated power

	400V	480 V
9321 =	0.37 kW	0.37 kW
9322 =	0.75 kW	0.75 kW
9323 =	1.5 kW	1.5 kW
9324 =	3.0 kW	3.0 kW
9325 =	5.5 kW	5.5 kW
9326 =	11 kW	11 kW
9327 =	15 kW	18.5 kW
3928 =	22 kW	30 kW
9329 =	30 kW	37 kW
9330 =	45 kW	45 kW
9331 =	55 kW	55 kW
9332 =	75 kW	90 kW

Type

E = panel-mounted unit

C = panel-mounted unit in ”cold plate” technology

Model

P = servo position controller

Variant

– standard

V003 = in ”cold plate” technology

V004 = with ”safe torque off” function

V100 = for IT systems

V104 = with ”safe torque off” function and for IT systems

Hardware version (from 6x)

Software version (from 8.0)

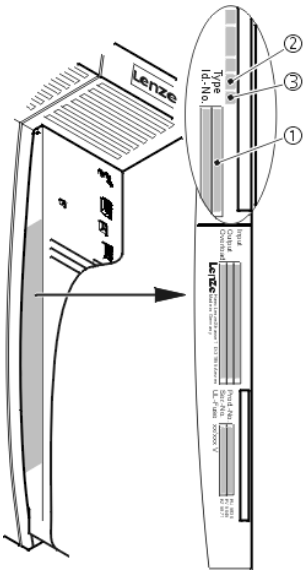

9300vec112

1.1.3 Document history

What is new / what has changed?

Material number	Version			Description
13440811	5.0	07/2013	TD06	Error corrections
13374993	4.2	03/2012	TD23	Error correction
13374993	4.1	05/2011	TD23	Error correction
13374993	4.0	04/2011	TD23	Extended by functions for software version 8.0 Complete editorial revision and error correction Division of the System Manual into 2 parts (EDSVS9332P and EDSVS9332P-EXT)
00463261	3.0	03/2003	TD23	Error correction and editorial revision
00406175	2.0	02/1999	-	Types 9321 to 9324 with a double overcurrent, new function “Automatic control parameter identification”
00397653	1.0	05/1997	-	First edition

1.2 Legal regulations

Identification

Lenze controllers are unambiguously identified by the contents of the nameplate.

Manufacturer

Lenze Automation GmbH, Hans-Lenze-Str. 1, D-31855 Aerzen, Germany

CE conformity

In conformity with EC ”Low Voltage” Directive

Application as directed

9300 servo controllers and accessories

- ► may only be operated under the conditions specified in this System Manual.
- ► are components
  - – for open and closed loop control of variable speed drives with PM synchronous motors, asynchronous standard motors or asynchronous servo motors.
  - – for installation in a machine.
  - – for assembly with other components to form a machine.
- ► comply with the protection requirements of the EC ”Low Voltage” Directive.
- ► are not machines for the purpose of the EC ”Machinery” Directive.
- ► are not to be used as domestic appliances, but only for industrial purposes.

Drive systems with 9300 servo controllers

- ► comply with the EC ”Electromagnetic Compatibility” Directive if they are installed according to the guidelines of CE-typical drive systems.
- ► can be used
  - – for operation on public and non-public mains supplies.
  - – for operation in industrial premises and residential and commercial areas.
- ► The user is responsible for the compliance of the machine application with the EC Directives.

Any other use shall be deemed inappropriate!

Liability

The information, data and notes given in this System Manual met the state of the art at the time of printing. Claims on modifications referring to controllers and components which have already been supplied cannot be derived from the information, illustrations and descriptions contained in this manual.

The procedural notes and circuit details given in this System Manual are suggestions and their transferability to the respective application has to be checked. Lenze does not take any responsibility for the suitability of the given procedures and circuit suggestions.

The specifications given in this System Manual describe the product features without guaranteeing them.

Lenze does not accept any liability for damage and malfunctioning caused by:

- ► Disregarding the System Manual
- ► Unauthorised modifications to the controller
- ► Operating faults
- ► Improper working on and with the controller

Warranty

See terms of sales and delivery of Lenze Automation GmbH.

Warranty claims must be made to Lenze immediately after detecting the deficiency or fault.

The warranty is void in all cases where liability claims cannot be made.

2 Safety instructions

Contents

2.1 General safety information 2.1-1
2.2 Thermal motor monitoring 2.2-1
2.2.1 Forced ventilated or naturally ventilated motors 2.2-2
2.2.2 Self-ventilated motors 2.2-3
2.3 Residual hazards 2.3-1
2.4 Safety instructions for the installation according to UL 2.4-3

2.1 General safety information

Scope

The following general safety instructions apply to all Lenze drive and automation components.

The product-specific safety and application notes given in this documentation must be observed!

Note for UL-approved systems: UL warnings are notes which only apply to UL systems. The documentation contains specific notes with regard to UL.

For your own safety

Danger!
Disregarding the following basic safety measures may lead to severe personal injury and damage to material assets!

► Lenze drive and automation components ...
... must only be used for the intended purpose.
... must never be operated if damaged.
... must never be subjected to technical modifications.
... must never be operated unless completely assembled.
... must never be operated without the covers/guards.
... can - depending on their degree of protection - have live, movable or rotating parts during or after operation. Surfaces can be hot.

► All specifications of the corresponding enclosed documentation must be observed.
This is vital for a safe and trouble-free operation and for achieving the specified product features.
The procedural notes and circuit details provided in this document are proposals which the user must check for suitability for his application. The manufacturer does not accept any liability for the suitability of the specified procedures and circuit proposals.

► Only qualified skilled personnel are permitted to work with or on Lenze drive and automation components.
According to IEC 60364 or CENELEC HD 384, these are persons ...
... who are familiar with the installation, assembly, commissioning and operation of the product,
... possess the appropriate qualifications for their work,
... and are acquainted with and can apply all the accident prevent regulations, directives and laws applicable at the place of use.

Transport, storage

► Transport and storage in a dry, low-vibration environment without aggressive atmosphere; preferably in the packaging provided by the manufacturer.
– Protect against dust and shocks.
– Comply with climatic conditions according to the technical data.

Mechanical installation

- ► Install the product according to the regulations of the corresponding documentation. In particular observe the section ”Operating conditions” in the chapter ”Technical data”.
- ► Provide for a careful handling and avoid mechanical overload. During handling neither bend components, nor change the insulation distances.
- ► The product contains electrostatic sensitive devices which can easily be damaged by short circuit or static discharge (ESD). Thus, electronic components and contacts must not be touched unless ESD measures are taken beforehand.

Electrical installation

- ► Carry out the electrical installation according to the relevant regulations (e. g. cable cross-sections, fusing, connection to the PE conductor). Additional notes are included in the documentation.
- ► When working on live products, observe the applicable national regulations for the prevention of accidents (e.g. BGV 3).
- ► The documentation contains information about EMC-compliant installation (shielding, earthing, arrangement of filters and laying cables). The system or machine manufacturer is responsible for compliance with the limit values required by EMC legislation.
  Warning: The controllers are products which can be used in category C2 drive systems as per EN 61800-3. These products may cause radio interference in residential areas. If this happens, the operator may need to take appropriate action.
- ► For compliance with the limit values for radio interference emission at the site of installation, the components - if specified in the technical data - have to be mounted in housings (e. g. control cabinets). The housings have to enable an EMC-compliant installation. In particular observe that for example control cabinet doors preferably have a circumferential metallic connection to the housing. Reduce openings or cutouts through the housing to a minimum.
- ► Only plug in or remove pluggable terminals in the deenergised state!

Commissioning

- ► If required, you have to equip the system with additional monitoring and protective devices in accordance with the respective valid safety regulations (e. g. law on technical equipment, regulations for the prevention of accidents).
- ► Before commissioning remove transport locking devices and keep them for later transports.

Operation

- ► Keep all protective covers and doors closed during operation.

Safety functions

- ► Without a higher-level safety system, the described product must neither be used for the protection of machines nor persons.
- ► Certain controller versions support safety functions (e.g. ”Safe torque off”, formerly ”Safe standstill”).
  The notes on the safety functions provided in the documentation of the versions must be observed.

Maintenance and servicing

- ► The components are maintenance-free if the required operating conditions are observed.
- ► If the cooling air is polluted, the cooling surfaces may be contaminated or the air vents may be blocked. Under these operating conditions, the cooling surfaces and air vents must be cleaned at regular intervals. Never use sharp objects for this purpose!
- ► Only replace defective fuses in the deenergised state to the type specified.
- ► After the system has been disconnected from the supply voltage, live components and power connections must not be touched immediately because capacitors may be charged. Please observe the corresponding notes on the device.

Disposal

- ► Recycle metals and plastic materials. Ensure professional disposal of assembled PCBs.

2.2 Thermal motor monitoring

From software version 8.0 onwards, the 9300 controllers are provided with an I^2xt function for sensorless thermal monitoring of the connected motor.

Note!

- ► I^2 x t monitoring is based on a mathematical model which calculates a thermal motor load from the detected motor currents.
- ► The calculated motor load is saved when the mains is switched.
- ► The function is UL-certified, i.e. no additional protective measures are required for the motor in UL-approved systems.
- ► However, I^2 x t monitoring is **no** full motor protection as other influences on the motor load could not be detected as for instance changed cooling conditions (e.g. interrupted or too warm cooling air flow).

Die I^2 x t load of the motor is displayed in C0066.

The thermal loading capacity of the motor is expressed by the thermal motor time constant (τ, C0128). Find the value in the rated motor data or contact the manufacturer of the motor.

The I^2 x t monitoring has been designed such that it will be activated after 179 s in the event of a motor with a thermal motor time constant of 5 minutes (Lenze setting C0128), a motor current of 1.5 x I_N and a trigger threshold of 100 %.

Two adjustable trigger thresholds provide for different responses.

► Adjustable response OC8 (TRIP, warning, off).
– The trigger threshold is set in C0127.
– The response is set in C0606.
– The response OC8, for instance, can be used for an advance warning.

► Fixed response OC6-TRIP.
– The trigger threshold is set in C0120.

Behaviour of the I^2 x t monitoring	Condition
The I^2 x t monitoring is deactivated. C0066 is set = 0 % and MCTRL-LOAD-I2XT is set = 0.00 %.	When C0120 = 0 % and C0127 = 0 %, set controller inhibit.
I^2 x t monitoring is stopped. The current value in C0066 and at the MCTRL-LOAD-I2XT output is frozen.	When C0120 = 0 % and C0127 = 0 %, set controller enable.
I^2 x t monitoring is deactivated. The motor load is displayed in C0066.	Set C0606 = 3 (off) and C0127 > 0 %.

Note!

An error message OC6 or OC8 can only be reset if the I^2 x t load falls below the set trigger threshold by 5 %.

2.2.1 Forced ventilated or naturally ventilated motors

Parameter setting

The following codes can be set for I^2 x t monitoring:

Code	Meaning	Value range	Lenze setting
C0066	Display of the I^2 x t load of the motor	0 ... 250 %	-
C0120	Threshold: Triggering of error "OC6"	0 ... 120 %	0 %
C0127	Threshold: Triggering of error "OC8"	0 ... 120 %	0 %
C0128	Thermal motor time constant	0.1 ... 50.0 min	5.0 min
C0606	Response to error "OC8"	TRIP, warning, off	Warning

Calculate release time and I^2xt load

Formula for release time	Information	
$t = -(\tau) \times \ln\left(1 - \frac{z+1}{\left(\frac{I_{Mot}}{I_N}\right)^2 \times 100}\right)$	I_{Mot}	Actual motor current (C0054)
	I_r	Rated motor current (C0088)
	τ	Thermal motor time constant (C0128)
	z	Threshold value in C0120 (OC6) <u>or</u> C0127 (OC8)

Formulae for I^2 x t load	Information	
$L(t) = \left(\frac{I_{Mot}}{I_N}\right)^2 \times 100\% \times \left(1 - e^{\frac{-t}{\tau}}\right)$	L(t)	Chronological sequence of the I^2 x t load of the motor (Display: C0066)
	I_{Mot}	Actual motor current (C0054)
	Ir	Rated motor current (C0088)
	τ	Thermal motor time constant (C0128)
If the controller is inhibited, the I^2 x t load is reduced:		
$L(t) = L_{Start} \times \sqrt{e^{-\frac{t}{\tau}}}$	L_{Start}	I^2 x t load before controller inhibit If an error is triggered, the value corresponds to the threshold value set in C0120 (OC6) <u>or</u> C0127 (OC8).

Read release time in the diagram

Diagram for detecting the release times for a motor with a thermal motor time constant of 5 minutes (Lenze setting C0128):

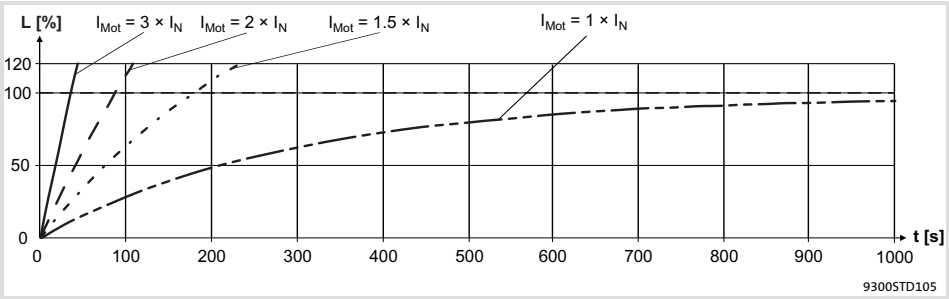

Fig. 2.2-1 I^2 × t-monitoring: Release times for different motor currents and trigger thresholds

I_{Mot} Actual motor current (C0054)
I_r Rated motor current (C0088)
L I^2 x t load of the motor (display: C0066)
T Time

2.2.2 Self-ventilated motors

Due to the construction, self-ventilated standard motors are exposed to an increased heat generation in the lower speed range compared to forced ventilated motors.

Warnings!

For complying with the UL 508C standard, you have to set the speed-dependent evaluation of the permissible torque via code **C0129/x**.

Parameter setting

The following codes can be set for I^2 x t monitoring:

Code	Meaning	Value range	Lenze setting
C0066	Display of the I^2 x t load of the motor	0 ... 250 %	-
C0120	Threshold: Triggering of error "OC6"	0 ... 120 %	0 %
C0127	Threshold: Triggering of error "OC8"	0 ... 120 %	0 %
C0128	Thermal motor time constant	0.1 ... 50.0 min	5.0 min
C0606	Response to error "OC8"	TRIP, warning, off	Warning
C0129/1	S1 torque characteristic I_1/I_{rated}	10 ... 200 %	100 %
C0129/2	S1 torque characteristics n_2/n_{rated}	10 ... 200 %	40 %

Effect of code C0129/x

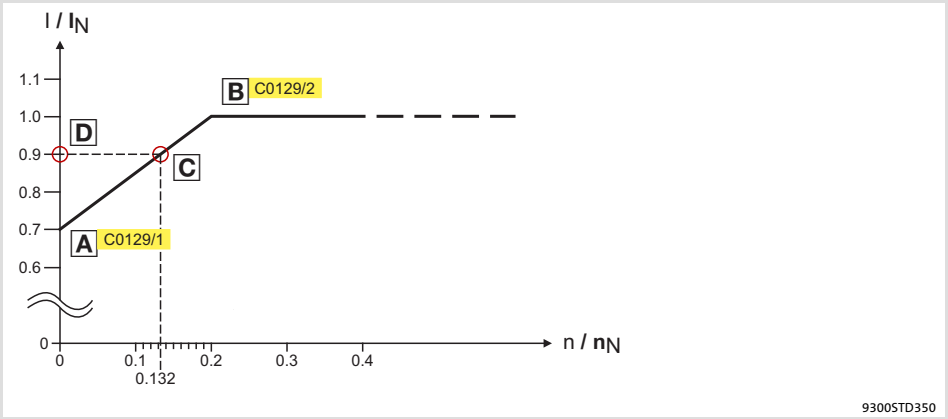

Fig. 2.2-2 Working point in the range of characteristic lowering

The lowered speed / torque characteristic (Fig. 2.2-2) reduces the permissible thermal load of self-ventilated standard motors. The characteristic is a line the definition of which requires two points:

- Point A: Definition with **C0129/1**
  This value also enables an increase of the maximally permissible load.
- Point B: Definition with **C0129/2**
  With increasing speeds, the maximally permissible load remains unchanged ($I_{Mot} = I_{rated}$).

In Fig. 2.2-2, the motor speed and the corresponding permissible motor torque (D) can be read for each working point (C on the characteristic (A) ... B). D can also be calculated using the values in **C0129/1**and **C0129/2** (evaluation coefficient "y", 📖 2.2-4).

Calculate release time and I^2xt load

Calculate the release time and the I^2 x t load of the motor considering the values in **C0129/1** and **C0129/2**(evaluation coefficient ”y”).

Formulae for release time	Information	
$T = -(\tau) \times \ln\left(1 - \frac{z+1}{\left(\frac{I_{Mot}}{y \times I_N}\right)^2 \times 100}\right)$	T	Release time of the I^2 x t monitoring
	τ	Thermal motor time constant (C0128)
	ln	Function: Natural logarithm
	I_{Mot}	Actual motor current (C0054)
	I_r	Rated motor current (C0088)
	z	Threshold value in C0120 (OC6) or C0127 (OC8)
$y = \frac{100\% - C0129/1}{C0129/2} \times \frac{n}{n_N} + C0129/1$	y	Evaluation coefficient
	n_{rated}	Rated speed (C0087)

Formulae for I^2 x t load	Information	
$L(t) = \left(\frac{I_{Mot}}{y \times I_N}\right)^2 \times 100\% \times \left(1 - e^{\frac{-t}{\tau}}\right)$	L(t)	Chronological sequence of the I^2 x t load of the motor (Display: C0066)
	y	Evaluation coefficient
	I_{Mot}	Actual motor current (C0054)
	Ir	Rated motor current (C0088)
	τ	Thermal motor time constant (C0128)
If the controller is inhibited, the I^2 x t load is reduced:		
$L(t) = L_{Start} \times \sqrt{e^{-\frac{t}{\tau}}}$	L_{Start}	I^2 x t load before controller inhibit If an error is triggered, the value corresponds to the threshold value set in C0120 (OC6) or C0127 (OC8).

2.3 Residual hazards

Protection of persons

- ► According to their enclosure, Lenze controllers (frequency inverters, servo inverters, DC speed controllers) and their components can carry a voltage, or parts of the controllers can move or rotate during operation. Surfaces can be hot.
  - – If the required cover is removed, the controllers are used inappropriately or installed or operated incorrectly, severe damage to persons or material assets can occur.
  - – For more detailed information please see the documentation.
- ► There is a high amount of energy within the controller. Therefore always wear personal protective equipment (body protection, headgear, eye protection, ear protection, hand guard) when working on the controller when it is live.
- ► Before working on the controller, check if no voltage is applied to the power terminals.
  - – the power terminals U, V, W, +UG and -UG still carry dangerous voltage for at least 3 minutes after power-off.
  - – the power terminals L1, L2, L3; U, V, W, +UG and -UG carry dangerous voltage when the motor is stopped.
- ► Before power-off during DC-bus operation, all controllers must be inhibited and disconnected from the mains.
- ► The discharge current to PE potential is > 3.5 mA. In accordance with EN 61800-5-1
  - – a fixed installation is required.
  - – the design of the PE conductor has to be double or, in the case of a single design, must have a cable cross-section of at least 10 mm^2.
- ► The controller can only be safely disconnected from the mains via a contactor on the input side.
- ► During parameter set transfer the control terminals of the controller can have undefined states.
  - – Therefore the connectors X5 and X6 must be disconnected from the controller before the transfer takes place. This ensures that the controller is inhibited and all control terminals have the defined state ”LOW”.

- Controllers can cause a DC current in the PE conductor. If a residual current device (RCD) or a fault current monitoring unit (RCM) is used for protection in the case of direct or indirect contact, only one RCD/RCM of the following type can be used on the current supply side:
  - Type B for the connection to a three-phase system
  - Type A or type B for the connection to a single phase system

  Alternatively another protective measure can be used, like for instance isolation from the environment by means of double or reinforced insulation, or isolation from the supply system by using a transformer.

Device protection

- Frequent mains switching (e.g. inching mode via mains contactor) can overload and destroy the input current limitation of the drive controller:
  - At least 3 minutes must pass between switching off and restarting the devices EVS9321-xP and EVS9322-xP.
  - At least 3 minutes must pass between two starting procedures of the devices EVS9323-xP ... EVS9332-xP.
  - Use the ”safe torque off” safety function (STO) if safety-related mains disconnections occur frequently. The drive variants Vxx4 are equipped with this function.

Motor protection

- For some controller settings, the connected motor may overheat (e.g. when operating the DC injection brake or a self-ventilated motor at low speed for longer periods).
  - Using an overcurrent relay or a temperature monitoring device provides a large degree of protection against overload.
  - We recommend to use PTC thermistors or thermal contacts for motor temperature monitoring. (Lenze three-phase AC motors are equipped with thermal contacts (NC contacts) as standard)
  - PTC thermistors or thermal contacts can be connected to the controller.
- Drives can attain dangerous overspeeds (e.g. setting of high output frequencies with motors and machines not qualified for this purpose).

2.4 Safety instructions for the installation according to UL

Warnings!

► Motor Overload Protection
- For information on the protection level of the internal overload protection for a motor load, see the corresponding manuals or software helps.
- If the integral solid state motor overload protection is not used, external or remote overload protection must be provided.

► Branch Circuit Protection
- The integral solid state protection does not provide branch circuit protection.
- Branch circuit protection has to be provided externally in accordance with corresponding instructions, the National Electrical Code and any additional codes.

► Please observe the specifications for fuses and screw-tightening torques in these instructions.

► EVS9321 ... EVS9326:
- Suitable for use on a circuit capable of delivering not more than 5000 rms symmetrical amperes, 480 V maximum, when protected by fuses.
- Suitable for use on a circuit capable of delivering not more than 50000 rms symmetrical amperes, 480 V maximum, when protected by CC, J, T or R class fuses.
- Maximum surrounding air temperature: 0 ... +55 °C
- > +40 °C: reduce the rated output current by 2.5 %/°C
- Use 75 °C copper wire only.

► EVS9327 ... EVS9329:
- Suitable for use on a circuit capable of delivering not more than 5000 rms symmetrical amperes, 480 V maximum, when protected by fuses.
- Suitable for use on a circuit capable of delivering not more than 50000 rms symmetrical amperes, 480 V maximum, when protected by J, T or R class fuses.
- Maximum surrounding air temperature: 0 ... +50 °C
- > +40 °C: reduce the rated output current by 2.5 %/°C
- Use 60/75 °C or 75 °C copper wire only.

► EVS9330 ... EVS9332:
- Suitable for use on a circuit capable of delivering not more than 10000 rms symmetrical amperes, 480 V maximum, when protected by fuses.
- Suitable for use on a circuit capable of delivering not more than 50000 rms symmetrical amperes, 480 V maximum, when protected by J, T or R class fuses.
- Maximum surrounding air temperature: 0 ... +50 °C
- > +40 °C: reduce the rated output current by 2.5 %/°C
- Use 60/75 °C or 75 °C copper wire only.

3 Technical data

Contents

3.1 General data and operating conditions 3.1-1
3.2 Open and closed loop control 3.2-1
3.3 Rated data 3.3-1
3.3.1 Operation at 400 V 3.3-1
3.3.2 Operation at 480 V 3.3-2
3.3.3 Overcurrent operation 3.3-4
3.4 Current characteristics 3.4-1

3.1 General data and operating conditions

General data

Conformity and approval			
Conformity			
CE	2006/95/EC	Low-Voltage Directive	
	2004/108/EG	EMC Directive	
Approval			
UL	cULus	Power Conversion Equipment (File No. E132659)	

Protection of persons and equipment			
Type of protection	EN 60529	IP20	
		IP41 in case of thermally separated installation (push-through technique) between the control cabinet (inside) and the environment.	
	NEMA 250	Protection against accidental contact in accordance with type 1	
Earth leakage current	IEC/EN 61800-5-1	> 3.5 mA	Observe regulations and safety instructions!
Insulation of control circuits	EN 61800-5-1	Safe mains isolation by double (reinforced) insulation for terminals X1 and X5. Basic insulation (single isolating distance) for terminals X3, X4, X6, X7, X8, X9, X10 and X11.	
Insulation resistance	IEC/EN 61800-5-1	< 2000 m site altitude: overvoltage category III	
		> 2000 m site altitude: overvoltage category II	
Protective measures		Against short circuit, earth fault (earth-fault protected during mains connection, limited earth-fault protection during operation), overvoltage, motor overtemperature (input for PTC or thermal contact)	

EMC			
Noise emission	IEC/EN 61800-3	Cable-guided, up to 10 m motor cable length with mains filter A: category C2.	
		Radiation, with mains filter A and installation in control cabinet: category C2	
Interference immunity	IEC/EN 61800-3	Category C3	

Operating conditions

Ambient conditions			
Climatic			
Storage	IEC/EN 60721-3-1	1K3 (-25 ... +55 °C)	< 6 months
		1K3 (-25 ... +40 °C)	> 6 months > 2 years: anodise DC bus capacitors
Transport	IEC/EN 60721-3-2	2K3 (-25 ... +70 °C)	
Operation			
EVS9321 ... EVS9326	IEC/EN 60721-3-3	3K3 (0 ... +55 °C) > +40 °C: reduce the rated output current by 2.5 %/°C.	
EVS9327 ... EVS9332		3K3 (0 ... +50 °C) > +40 °C: reduce the rated output current by 2.5 %/°C.	
Pollution	EN 61800-5-1	Degree of pollution 2	

Ambient conditions			
Site altitude		< 4000 m amsl > 1000 m amsl: reduce the rated output current by 5 %/ 1000 m	
Mechanical			
Vibration resistance	EN 50178 EN 61800-5-1 Germanischer Lloyd, general conditions	Tested according to ”General Vibration Stress Characteristic 1”	
Electrical			
AC-mains connection			
Max. mains voltage range		320 V - 0 % ... 528 V + 0 %	
Mains frequency		45 Hz - 0 % ... 65 Hz + 0 %	
Power system TT, TN		Operation permitted without restrictions with earthed neutral.	
Power system IT		Operation only permitted with the device variants V024 or V100. Operation permitted without restrictions with insulated neutral. Observe instructions on specific measures!	
Operation on public supply systems	EN 61000-3-2	Limitation of harmonic currents	
		Total output at the mains	Compliance with the requirements [1)]
		< 1 kW	With mains choke.
		> 1 kW	Without additional measures.
		[1)] The additional measures mentioned have the effect that solely the controllers meet the requirements of EN 61000-3-2. The machine/system manufacturer is responsible for the compliance with the requirements for the machine/system!	
DC-mains connection			
Max. mains voltage range		450 V - 0 % ... 740 V + 0 %	
Operating conditions		DC voltage must be symmetrical to PE. The controller will be destroyed when $+U_G$ or $-U_G$ are earthed.	
Motor connection			
Length of the motor cable		< 50 m No additional output filters are required at a rated mains voltage and a switching frequency of 8 kHz. If EMC requirements have to be met, the permissible cable length may be affected.	

Mounting conditions		
Mounting place		In the control cabinet
Mounting position		Vertical
Free spaces Dimensions Weights		📖 4-1

3.2 *Open and closed loop control*

Open and closed loopcontrol		
Switching frequency	8 kHz or 16 kHz	
Digital setpoint selection		
Accuracy	± 0.005 Hz (= ± 100 ppm)	
Analog setpoint selection		
Linearity	± 0.15 %	Signal level: 5 V or 10 V
Temperature sensitivity	± 0.1 %	0 ... 50 °C
Offset	± 0.1 %	
Analog inputs Analog outputs	● 2 inputs (bipolar) ● 2 outputs (bipolar)	
Digital inputs Digital outputs	● 5 inputs (freely assignable) ● 1 input for controller inhibit ● 4 outputs (freely assignable) ● 1 resolver input; design: 9-pole Sub-D socket ● 1 incremental encoder input (500 kHz, TTL level); design: 9-pole Sub-D socket (pin) ● 1 digital frequency input (500 kHz, TTL level); design: 9-pole Sub-D socket (pin); can be optionally used as incremental encoder input (500 kHz, TTL level) ● 1 digital frequency output (500 kHz, TTL level); design: 9-pole Sub-D socket	
Cycle times		
Digital inputs	1 ms	
Digital outputs	1 ms	
Analog inputs	1 ms	
Analog outputs	1 ms (smoothing time: τ= 2 ms)	

3.3 Rated data

Note!

The controllers EVS9324, EVS9326 and EVS9328 ... EVS9333 may only be operated with the prescribed mains chokes and mains filters.

3.3.1 Operation at 400 V

Basis of the data			
		Voltage	Frequency
AC mains connection	[V_{rated}]	3/PE AC 320 V - 0 % ... 440 V + 0 %	45 Hz - 0 % ... 65 Hz + 0 %
DC-mains connection (alternatively)	[U_{DC}]	DC 450 V - 0 % ... 620 V + 0 %	–
Output voltage			
With mains choke		3 ~ 0 approx. 94 % V_{rated}	–
Without mains choke		3 ~ 0 ... U_N	–

9300	Mains current 1)		Typical motor power		Output power		Power loss
	With mains choke	Without mains choke	ASM (4-pole)		8 kHz 2) U, V, W	$+U_G$, $-U_G$ 3)	
Type	I_r [A]	I_r [A]	P_r [kW]	P_r [hp]	S_{r8} [kVA]	P_{DC} [kW]	P_V [W]
EVS9321-xP	1.5	2.1	0.37	0.5	**1.0**	2.0	100
EVS9322-xP	2.5	3.5	0.75	1.0	**1.7**	0.75	110
EVS9323-xP	3.9	5.5	1.5	2.0	**2.7**	2.2	140
EVS9324-xP	7.0	–	3.0	4.0	**4.8**	0.75	200
EVS9325-xP	12.0	16.8	5.5	7.5	**9.0**	0	260
EVS9326-xP	20.5	–	11.0	15.0	**16.3**	0	390
EVS9327-xP	27.0	43.5	15.0	20.0	**22.2**	10	430
EVS9328-xP	44.0	–	22.0	30.0	**32.6**	4	640
EVS9329-xP	53.0	–	30.0	40.0	**40.9**	0	810
EVS9330-xP	78.0	–	45.0	60.0	**61.6**	5	1100
EVS9331-xP	100	–	55.0	75.0	**76.2**	0	1470
EVS9332-xP	135	–	75.0	100	**100.5**	0	1960

Bold print = Lenze setting
1) Mains currents at 8 kHz switching frequency
2) Switching frequency of the inverter
3) Power which can additionally be drawn from the DC bus at operation with power-adapted motor

9300	Output currents					
	8 kHz 1)			16 kHz 1)		
	Rated current	Maximum current 2)	Standstill current	Rated current	Maximum current 2)	Standstill current
Type	I_{r8} [A]	I_{M8} [A]	I_{08} [A]	I_{r16} [A]	I_{M16} [A]	I_{016} [A]
EVS9321-xP	**1.5**	2.25	2.3	1.1	1.65	1.7
EVS9322-xP	**2.5**	3.75	3.8	1.8	2.7	2.7
EVS9323-xP	**3.9**	5.85	5.9	2.9	4.35	4.4
EVS9324-xP	**7.0**	10.5	10.5	5.2	7.8	7.8
EVS9325-xP	**13.0**	19.5	19.5	9.7	14.6	14.6
EVS9326-xP	**23.5**	35.3	23.5	15.3	23.0	15.3
EVS9327-xP	**32.0**	48.0	32.0	20.8	31.2	20.8
EVS9328-xP	**47.0**	70.5	47.0	30.6	45.9	30.6
EVS9329-xP	**59.0**	88.5	52.0	38.0	57.0	33.0
EVS9330-xP	**89.0**	133.5	80.0	58.0	87.0	45.0
EVS9331-xP	**110**	165	110	70.0	105	70.0
EVS9332-xP	**145**	21.5	126	90.0	135	72.0

Bold print = Lenze setting
1) Switching frequency of the inverter
2) The currents apply to a periodic load change cycle with max. 1 minute overcurrent duration and 2 minutes base load duration at max. 75 % I_r

3.3.2 Operation at 480 V

Basis of the data			
		Voltage	Frequency
Supply			
3/PE 480 V AC	[U_r]	320 V - 0 % ... 528 V + 0 %	45 Hz - 0 % ... 65 Hz + 0 %
DC 678 V (alternatively)	[U_{DC}]	460 V - 0 % ... 740 V + 0 %	–
Output voltage			
With mains choke		3 ~ 0 ... approx. 94 % U_r	–
Without mains choke		3 ~ 0 ... U_r	–

9300	Mains current [1]		Typical motor power		Output power		Power loss
	With mains choke	Without mains choke	ASM (4-pole)		8 kHz [2] U, V, W	$+U_G$, $-U_G$ [3]	
Type	I_r [A]	I_r [A]	P_r [kW]	P_r [hp]	S_{r8} [kVA]	P_{DC} [kW]	P_V [W]
EVS9321-xP	1.5	2.1	0.37	0.5	**1.2**	2.0	100
EVS9322-xP	2.5	3.5	0.75	1.0	**2.1**	0.75	110
EVS9323-xP	3.9	5.5	1.5	2.0	**3.2**	2.2	140
EVS9324-xP	7.0	–	3.0	4.0	**5.8**	0.75	200
EVS9325-xP	12.0	16.8	5.5	7.5	**10.8**	0	260
EVS9326-xP	20.5	–	11.0	15.0	**18.5**	0	390
EVS9327-xP	27.0	43.5	18.5	25.0	**25.0**	12	430
EVS9328-xP	44.0	–	30.0	40.0	**37.0**	4.8	640
EVS9329-xP	53.0	–	37.0	50.0	**46.6**	0	810
EVS9330-xP	78.0	–	45.0	60.0	**69.8**	6	1100
EVS9331-xP	100	–	55.0	75.0	**87.3**	0	1470
EVS9332-xP	135	–	90.0	125	**104**	6	1960

Bold print = Lenze setting
1) Mains currents at 8 kHz switching frequency
2) Switching frequency of the inverter
3) Power which can additionally be drawn from the DC bus at operation with power-adapted motor

9300	Output currents					
	8 kHz [1]			16 kHz [1]		
	Rated current	Maximum current [2]	Standstill current	Rated current	Maximum current [2]	Standstill current
Type	I_{r8} [A]	I_{M8} [A]	I_{08} [A]	I_{r16} [A]	I_{M16} [A]	I_{016} [A]
EVS9321-xP	**1.5**	2.25	2.3	1.1	1.65	1.7
EVS9322-xP	**2.5**	3.75	3.8	1.8	2.7	2.7
EVS9323-xP	**3.9**	5.85	5.9	2.9	4.35	4.4
EVS9324-xP	**7.0**	10.5	10.5	5.2	7.8	7.8
EVS9325-xP	**13.0**	19.5	19.5	9.7	14.6	14.6
EVS9326-xP	**22.3**	33.5	22.3	14.5	21.8	14.5
EVS9327-xP	**30.4**	45.6	30.4	19.2	28.8	19.2
EVS9328-xP	**44.7**	67.1	44.7	28.2	42.3	28.2
EVS9329-xP	**56.0**	84.0	49.0	35.0	52.5	25.0
EVS9330-xP	**84.0**	126	72.0	55.0	82.5	36.0
EVS9331-xP	**105**	157.5	105	65.0	97.5	58.0
EVS9332-xP	**125**	187.5	111	80.0	120	58.0

Bold print = Lenze setting
1) Switching frequency of the inverter
2) The currents apply to a periodic load change cycle with max. 1 minute overcurrent duration and 2 minutes base load duration at max. 75 % I_r

3.3.3 Overcurrent operation

Under the operating conditions described here, the EVS9321-xP ... EVS9324-xP controllers can supply a rated output current which is up to twice as high.

Note!

If you enter values > 1.5 × rated output current under C0022, the controller switches to overcurrent operation.

- ► Switching between overcurrent operation and standard operation is only possible if the controller is inhibited (X5/28 = LOW).
- ► The continuous current is automatically reduced to 70 % of the rated output current.

3.3.3.1 Operation at 400 V

Basis of the data			
		Voltage	Frequency
AC mains connection	[V_{rated}]	3/PE AC 320 V - 0 % ... 440 V + 0 %	45 Hz - 0 % ... 65 Hz + 0 %
DC-mains connection (alternatively)	[U_{DC}]	DC 450 V - 0 % ... 620 V + 0 %	–
Output voltage			
With mains choke		3 ~ 0 approx. 94 % V_{rated}	–
Without mains choke		3 ~ 0 ... U_N	–

9300	Mains current [1]		Typical motor power		Output power		Power loss
	With mains choke	Without mains choke	ASM (4-pole)		8 kHz [2] U, V, W	$+U_G$, $-U_G$ [3]	
Type	I_r [A]	I_r [A]	P_r [kW]	P_r [hp]	S_{r8} [kVA]	P_{DC} [kW]	P_V [W]
EVS9321-xP	1.5	2.1	0.37	0.5	**1.0**	2.0	100
EVS9322-xP	2.5	3.5	0.75	1.0	**1.7**	0.75	110
EVS9323-xP	3.9	5.5	1.5	2.0	**2.7**	2.2	140
EVS9324-xP	7.0	–	3.0	4.0	**4.8**	0.75	200

Bold print = Lenze setting
1) Mains currents at 8 kHz switching frequency
2) Switching frequency of the inverter
3) Power which can additionally be drawn from the DC bus at operation with power-adapted motor

9300	Output currents							
	8 kHz [1]				16 kHz [1]			
	Rated current	Continuous thermal current [3]	Maximum current [2]	Standstill current	Rated current	Continuous thermal current [3]	Maximum current [2]	Standstill current
Type	I_{r8} [A]	I_{r8} [A]	I_{M8} [A]	I_{08} [A]	I_{r16} [A]	I_{r16} [A]	I_{M16} [A]	I_{016} [A]
EVS9321-xP	1.5	1.05	3.0	3.0	1.1	0.77	2.2	2.2
EVS9322-xP	2.5	1.75	5.0	5.0	1.8	1.26	3.6	3.6
EVS9323-xP	3.9	2.73	7.8	7.8	2.9	2.03	5.8	5.8
EVS9324-xP	7.0	4.9	14.0	14.0	5.2	3.64	10.4	10.4

1) Switching frequency of the inverter
2) The currents apply to a periodic load change cycle with max. 10 seconds overcurrent duration and 50 seconds base load duration at max. 44 % of the rated current
3) 70 % of the rated current

3.3.3.2 Operation at 480 V

Basis of the data			
		Voltage	Frequency
Supply			
3/PE 480 V AC	[U_r]	320 V - 0 % ... 528 V + 0 %	45 Hz - 0 % ... 65 Hz + 0 %
DC 678 V (alternatively)	[U_{DC}]	460 V - 0 % ... 740 V + 0 %	–
Output voltage			
With mains choke		3 ~ 0 ... approx. 94 % U_r	–
Without mains choke		3 ~ 0 ... U_r	–

9300	Mains current [1]		Typical motor power		Output power		Power loss
	With mains choke	Without mains choke	ASM (4-pole)		8 kHz [2] U, V, W	$+U_G$, $-U_G$ [3]	
Type	I_r [A]	I_r [A]	P_r [kW]	P_r [hp]	S_{r8} [kVA]	P_{DC} [kW]	P_V [W]
EVS9321-xP	1.5	2.1	0.37	0.5	**1.2**	2.0	100
EVS9322-xP	2.5	3.5	0.75	1.0	**2.1**	0.75	110
EVS9323-xP	3.9	5.5	1.5	2.0	**3.2**	2.2	140
EVS9324-xP	7.0	–	3.0	4.0	**5.8**	0.75	200

Bold print = Lenze setting
1) Mains currents at 8 kHz switching frequency
2) Switching frequency of the inverter
3) Power which can additionally be drawn from the DC bus at operation with power-adapted motor

9300	Output currents							
	8 kHz [1]				16 kHz [1]			
	Rated current	Continuous thermal current [3]	Maximum current [2]	Standstill current	Rated current	Continuous thermal current [3]	Maximum current [2]	Standstill current
Type	I_{r8} [A]	I_{r8} [A]	I_{M8} [A]	I_{08} [A]	I_{r16} [A]	I_{r16} [A]	I_{M16} [A]	I_{016} [A]
EVS9321-xP	1.5	1.05	3.0	3.0	1.1	0.77	2.2	2.2
EVS9322-xP	2.5	1.75	5.0	5.0	1.8	1.26	3.6	3.6
EVS9323-xP	3.9	2.73	7.8	7.8	2.9	2.03	5.8	5.8
EVS9324-xP	7.0	4.9	14.0	14.0	5.2	3.64	10.4	10.4

1) Switching frequency of the inverter
2) The currents apply to a periodic load change cycle with max. 10 seconds overcurrent duration and 50 seconds base load duration at max. 44 % of the rated current
3) 70 % of the rated current

3.4 Current characteristics

The maximum output current of the EVS9326 ... EVS9332 devices is limited under certain operating conditions:

- ► At output frequencies f_{out} < |5 Hz| and heatsink temperatures ϑ_K > 40° C.
- ► The current limitation depends on the switching frequency.

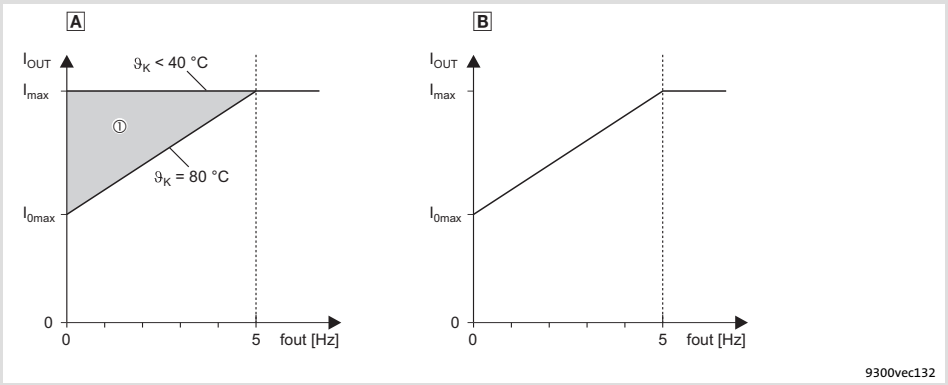

Fig. 3.4-1 Current derating characteristics

A Operation at switching frequency f_{chop} = 8 kHz (C0018 = 1)
The current limitation follows the characteristic curve
At output frequencies f_{out} < |5 Hz| and heatsink temperatures ϑ_K = 40 ... 80 °C, the current limit is steplessly adjusted in the ① range

B Operation at switching frequency f_{chop} = 16 kHz (C0018 = 2)
The current limitation follows the characteristic curve and is independent of the heatsink temperature

At automatic change-over of the switching frequency (C0018 = 0), the controller operates at f_{chop} = 16 kHz. The current limitation follows the characteristic curve B.

If an increased torque is required (e.g. acceleration processes), the controller automatically switches over to f_{chop} = 8 kHz. The current limitation follows the characteristic curve A.

9300	I_{0max} [A] 1)		I_{0max} [A] 2)	
	f_{chop} = 8 kHz		f_{chop} = 16 kHz	
	U_{mains}		U_{mains}	
	400 V	480 V	400 V	480 V
EVS9326-xP	23.5	22.3	15.3	14.5
EVS9327-xP	32.0	30.4	20.8	19.2
EVS9328-xP	47.0	44.7	30.6	28.2
EVS9329-xP	52.0	49.0	33.0	25.0
EVS9330-xP	80.0	72.0	45.0	36.0
EVS9331-xP	110	105	70.0	58.0
EVS9332-xP	126	111	72.0	58.0

1) Maximum available output current at an output frequency f_{out} = |0 Hz| and heatsink temperature ϑ_K = 80 °C
2) Maximum available output current at an output frequency f_{out} = |0 Hz|

4 Installation of the standard device

Contents

4.1 Standard devices in the power range 0.37 ... 11 kW 4.1-1
4.1.1 Important notes 4.1-1
4.1.2 Mounting with fixing rails (standard) 4.1-2
4.1.3 Thermally separated mounting (push-through technique) . 4.1-3
4.1.4 Mounting in ”cold plate” technique 4.1-4
4.2 Standard devices in the power range 15 ... 30 kW 4.2-1
4.2.1 Important notes 4.2-1
4.2.2 Mounting with fixing brackets (standard) 4.2-2
4.2.3 Thermally separated mounting (push-through technique) . 4.2-3
4.2.4 Mounting in ”cold plate” technique 4.2-4
4.3 Standard devices with a power of 45 kW 4.3-1
4.3.1 Important notes 4.3-1
4.3.2 Mounting with fixing brackets (standard) 4.3-2
4.3.3 Thermally separated mounting (push-through technique) . 4.3-3
4.3.4 Modification of the fan module for push-through technique 4.3-4
4.4 Standard devices in the power range 55 ... 75 kW 4.4-1
4.4.1 Important notes 4.4-1
4.4.2 Mounting with fixing brackets (standard) 4.4-2
4.4.3 Thermally separated mounting (push-through technique) . 4.4-3

4.1 Standard devices in the power range 0.37 ... 11 kW

4.1.1 Important notes

Mass of the devices

9300	Standard device	”Cold plate” device
Type	EVS93xx-**E**P [kg]	EVS93xx-**C**P [kg]
EVS9321-xP	4.0	3.1
EVS9322-xP	4.0	3.1
EVS9323-xP	5.5	3.9
EVS9324-xP	5.5	3.9
EVS9325-xP	7.4	5.2
EVS9326-xP	7.4	5.2

4.1.2 Mounting with fixing rails (standard)

Mounting material required from the scope of supply:

Description	Use	Quantity	
		EVS9321-EP ... EVS9324-EP	EVS9325-EP EVS9326-EP
Fixing rails	Drive controller fixing	2	4

Dimensions

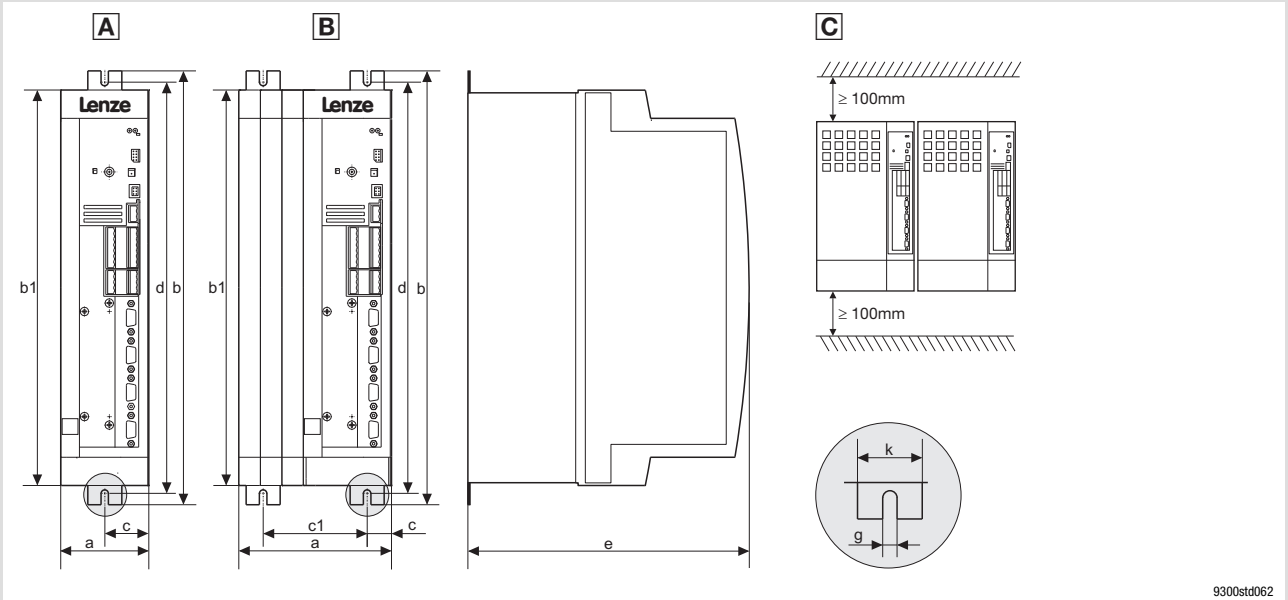

Fig. 4.1-1 Standard mounting with fixing rails 0.37 ... 11 kW

C Drive controllers can be mounted side by side without spacing

9300		Dimensions [mm]									
Type		a	b	b1	c	c1	d	d1	e [1]	g	k
EVS9321-EP EVS9322-EP	A	78	384	350	39	-	365	–	250	6.5	30
EVS9323-EP EVS9324-EP	A	97	384	350	48.5	-	365	–	250	6.5	30
EVS9325-EP EVS9326-EP	B	135	384	350	21.5	92	365	–	250	6.5	30

[1] For a fieldbus module plugged onto X1, consider mounting space for connecting cables

Mounting

► Attach the fixing rails to the housing of the drive controller.

4.1.3 Thermally separated mounting (push-through technique)

For mounting in push-through technique you have to use the controller type EVS93xx-**E**P. Additionally you will require the mounting set for push-through technique:

Type	Mounting set
EVS9321-EP, EVS9322-EP	EJ0036
EVS9323-EP, EVS9324-EP	EJ0037
EVS9325-EP, EVS9326-EP	EJ0038

Dimensions

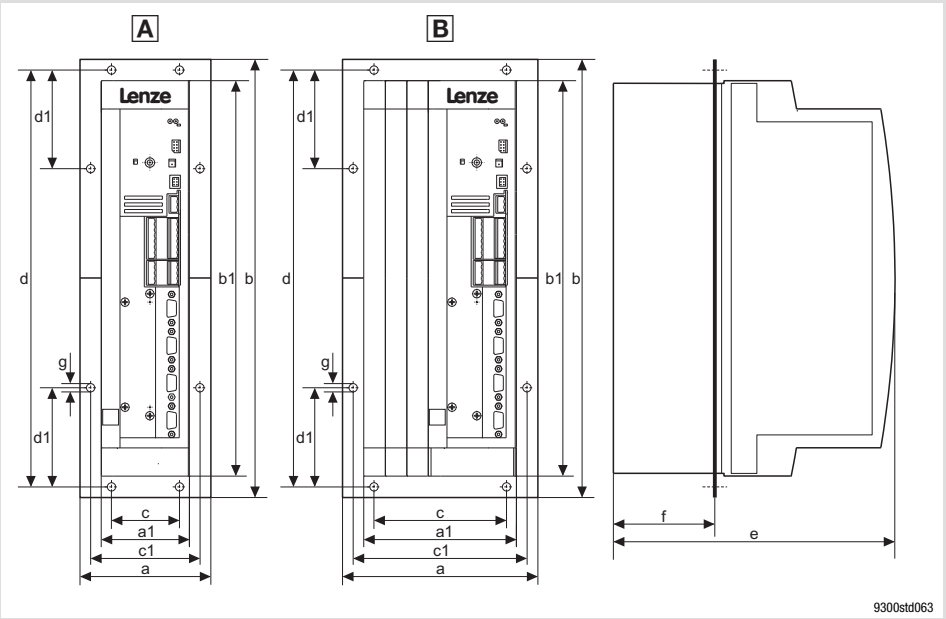

Fig. 4.1-2 Dimensions for thermally separated mounting 0.37 ... 11 kW

9300		Dimensions [mm]										
Type		a	a1	b	b1	c	c1	d	d1	e [1]	f	g
EVS9321-EP EVS9322-EP	A	112.5	78	385.5	350	60	95.5	365.5	105.5	250	92	6.5
EVS9323-EP EVS9324-EP	A	131.5	97	385.5	350	79	114.5	365.5	105.5	250	92	6.5
EVS9325-EP EVS9326-EP	B	169.5	135	385.5	350	117	152.5	365.5	105.5	250	92	6.5

[1] For a fieldbus module plugged onto X1, consider mounting space for connecting cables

Mounting cutout in control cabinet

9300		Dimensions [mm]	
Type		Width	Height
EVS9321-EP EVS9322-EP	A	82	350
EVS9323-EP EVS9324-EP	A	101	350
EVS9325-EP EVS9326-EP	B	139	350

4.1.4 Mounting in ”cold plate” technique

The drive controllers can be mounted in ”cold plate” technique, e.g. on collective coolers. For this purpose, the drive controllers of type EVS93xx-**C**Px must be used.

Mounting material required from the scope of supply:

Description	Use	Quantity		
		EVS9321-CP EVS9322-CP	EVS9323-CP EVS9324-CP	EVS9325-CP EVS9326-CP
Fixing bracket	Controller fixing	2	2	2
Sheet metal screw 3.5 × 13 mm (DIN 7981)	Mounting the fixing bracket to the controller	6	6	6

Requirements for collective coolers

The following points are important for safe and reliable operation of the controller:

► Good thermal connection to the cooler
- – The contact surface between the collective cooler and the controller must be at least as large as the cooling plate of the controller.
- – Plane contact surface, max. deviation 0.05 mm.
- – When attaching the collective cooler to the controller, make sure to use all specified screw connections.

► Observe the thermal resistance R_{th} given in the table. The values are valid for controller operation under rated conditions.

9300	Cooling path	
	Power to be dissipated	Heatsink - environment
Type	P_v [W]	R_{th} [K/W]
EVS9321-CP	24	1.45
EVS9322-CP	42	0.85
EVS9323-CP	61	0.57
EVS9324-CP	105	0.33
EVS9325-CP	180	0.19
EVS9326-CP	360	0.10

Ambient conditions

► The rated data and the derating factors at increased temperature also apply to the ambient temperature of the drive controllers.

► Temperature at the cooling plate of the drive controller: max. 75 °C.

Dimensions

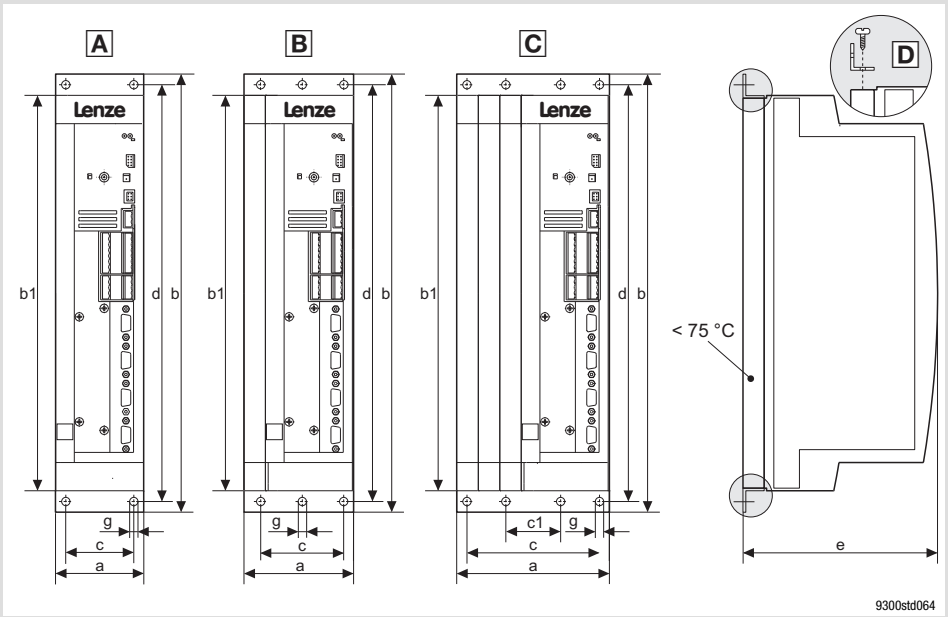

Fig. 4.1-3 Dimensions for mounting in ”cold plate” technique 0.37 ... 11 kW

9300		Dimensions [mm]							
Type		a	b	b1	c	c1	d	e [1]	g
EVS9321-CP EVS9322-CP	A	78	381	350	48	–	367	168	6.5
EVS9323-CP EVS9324-CP	B	97	381	350	67	–	367	168	6.5
EVS9325-CP EVS9326-CP	C	135	381	350	105	38	367	168	6.5

[1] For a fieldbus module plugged onto X1, consider mounting space for connecting cables

Mounting

Apply heat conducting paste before screwing together the cooler and cooling plate of the drive controller so that the heat transfer resistance is as low as possible.

1. Fasten the fixing bracket with sheet metal screws 3.5 × 13 mm at the top and bottom of the drive controller D.
2. Clean the contact surface of cooler and cooling plate with spirit.
3. Apply a thin coat of heat conducting paste with a filling knife or brush.
   – The heat conducting paste in the accessory kit is sufficient for an area of approx. 1000 cm^2.
4. Mount the drive controller on the cooler.

4.2 Standard devices in the power range 15 ... 30 kW

4.2.1 Important notes

The accessory kit is located inside the controller.

Remove the cover of the drive controller

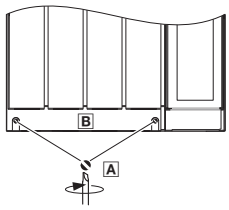

1. Remove the screws A
2. Lift cover B up and detach it

Mass of the devices

9300	Standard device	”Cold plate” device
Type	EVS93xx-**E**P [kg]	EVS93xx-**C**P [kg]
EVS9327-xP	13.5	9.5
EVS9328-xP	15.0	9.5
EVS9329-xP	15.0	–

4.2.2 Mounting with fixing brackets (standard)

Mounting material required from the scope of supply:

Description	Use	Quantity
Fixing bracket	Drive controller fixing	4
Raised countersunk head screw M5 × 10 mm (DIN 966)	Mounting of fixing bracket to the drive controller	4

Dimensions

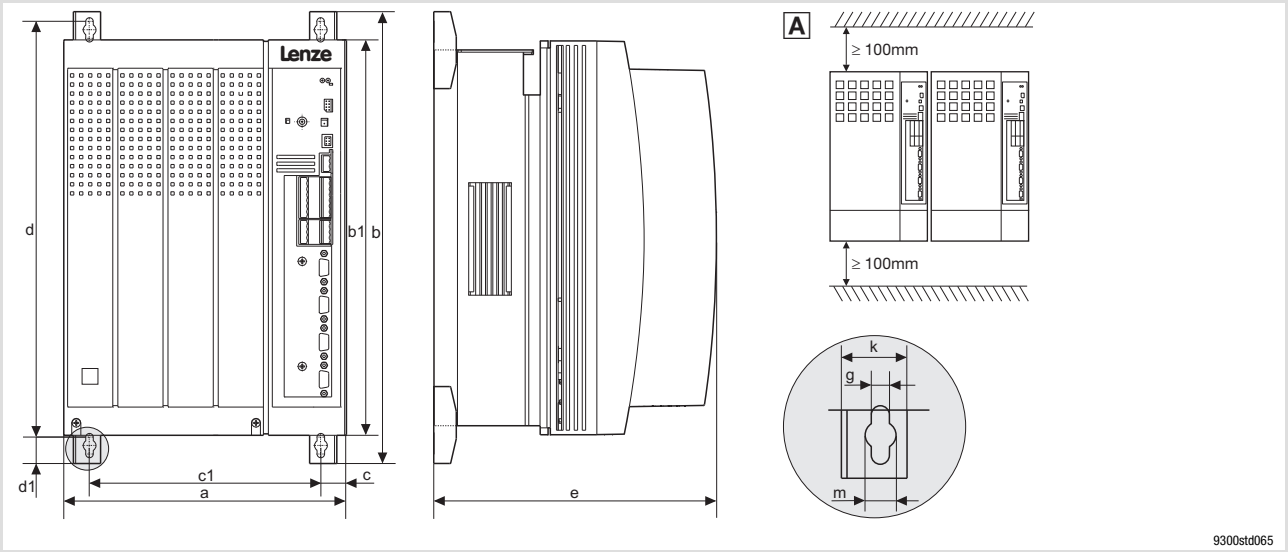

Fig. 4.2-1 Standard mounting with fixing brackets 15 ... 30 kW

A Drive controllers can be mounted side by side without spacing

9300	Dimensions [mm]										
Type	a	b	b1	c	c1	d	d1	e [1]	g	k	m
EVS9327-EP EVS9328-EP EVS9329-EP	250	402	350	22	206	370	24	250	6.5	24	11

[1] For a fieldbus module plugged onto X1, consider mounting space for connecting cables

Mounting

► Attach the fixing brackets to the heatsink plate of the drive controller.

4.2.3 Thermally separated mounting (push-through technique)

For mounting in push-through technique, the drive controller of type EVS93xx-**E**Px must be used. In addition, the mounting set EJ0011 for the push-through technique is required.

Dimensions

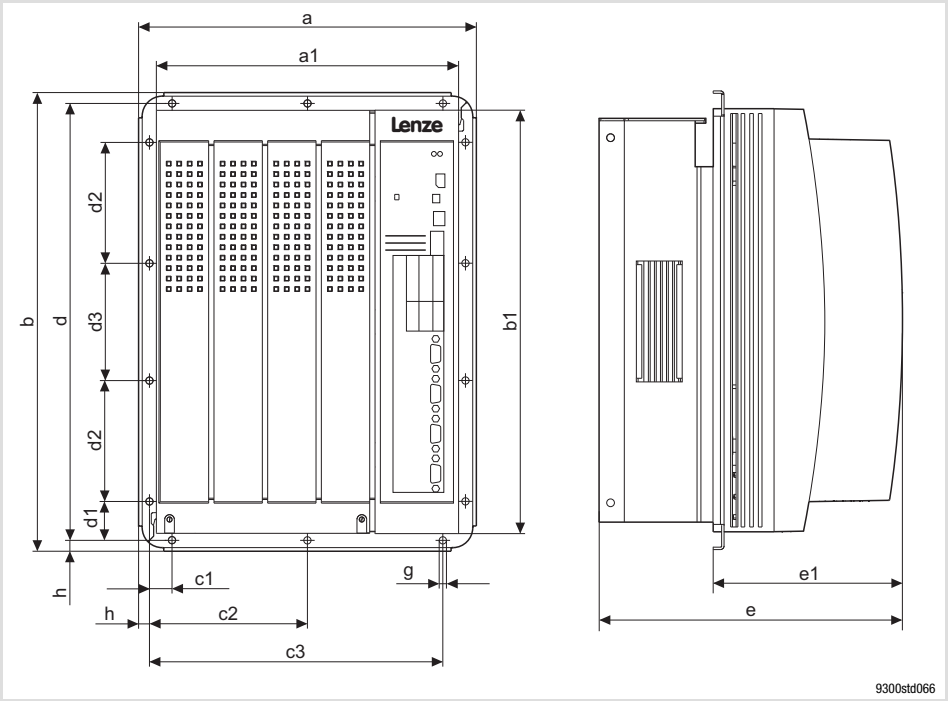

Fig. 4.2-2 Dimensions for thermally separated mounting 15 ... 30 kW

9300	Dimensions [mm]														
Type	a	a1	b	b1	c1	c2	c3	d	d1	d2	d3	e [1]	e1	g	h
EVS9327-EP EVS9328-EP EVS9329-EP	279.5	250	379.5	350	19	131	243	361.5	32	100	97	250	159.5	6	9

[1] For a fieldbus module plugged onto X1, consider mounting space for connecting cables

Mounting cutout in control cabinet

9300	Dimensions [mm]	
Type	Width	Height
EVS9327-EP EVS9328-EP EVS9329-EP	236	336

4.2.4 Mounting in ”cold plate” technique

The drive controllers can be mounted in ”cold plate” technique, e.g. on collective coolers. For this purpose, the drive controllers of type EVS93xx-**C**Px must be used.

Requirements for collective coolers

The following points are important for safe and reliable operation of the controller:

► Good thermal connection to the cooler
- – The contact surface between the collective cooler and the controller must be at least as large as the cooling plate of the controller.
- – Plane contact surface, max. deviation 0.05 mm.
- – When attaching the collective cooler to the controller, make sure to use all specified screw connections.

► Observe the thermal resistance R_{th} given in the table. The values are valid for controller operation under rated conditions.

9300	Cooling path	
	Power to be dissipated	Heatsink - environment
Type	P_v [W]	R_{th} [K/W]
EVS9327-CP	410	0.085
EVS9328-CP	610	0.057

Ambient conditions

► The rated data and the derating factors at increased temperature also apply to the ambient temperature of the drive controllers.

► Temperature at the cooling plate of the drive controller: max. 75 °C.

Dimensions

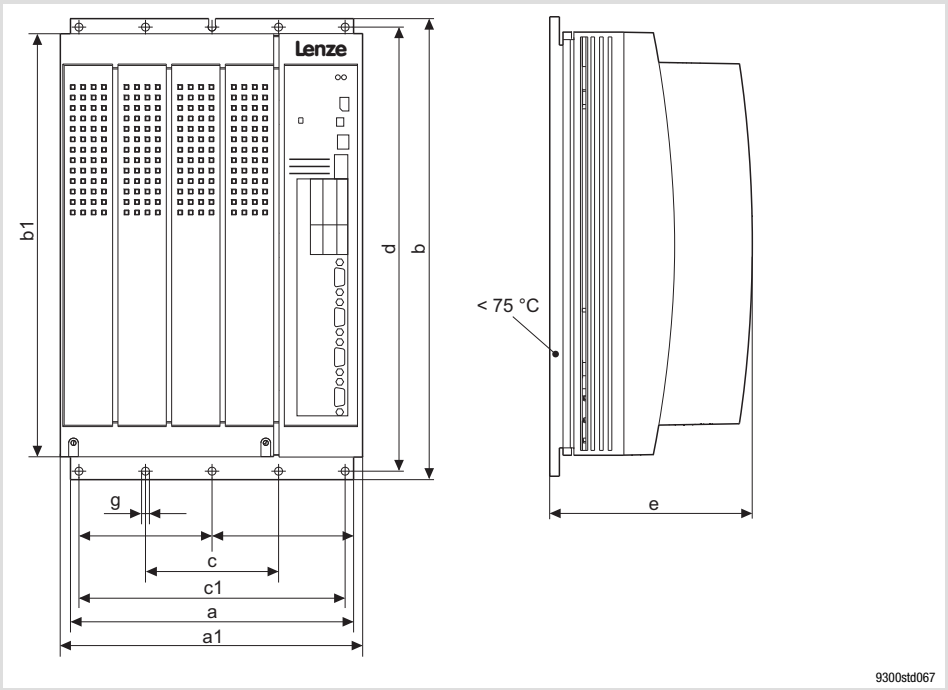

Fig. 4.2-3 Dimensions for mounting in ”cold plate” technique 15 ... 22 kW

9300	Dimensions [mm]								
Type	a	a1	b	b1	c	c1	d	e [1]	g
EVS9327-CP EVS9328-CP	234	250	381	350	110	220	367	171	6.5

[1] For a fieldbus module plugged onto X1, consider mounting space for connecting cables

Mounting

Apply heat conducting paste before screwing together the cooler and cooling plate of the drive controller so that the heat transfer resistance is as low as possible.

1. Clean the contact surface of cooler and cooling plate with spirit.
2. Apply a thin coat of heat conducting paste with a filling knife or brush.
   – The heat conducting paste in the accessory kit is sufficient for an area of approx. 1000 cm^2.
3. Mount the drive controller on the cooler.

4.3 Standard devices with a power of 45 kW

4.3.1 Important notes

The accessory kit is located inside the controller.

Remove the cover of the drive controller	
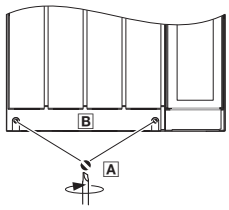	1. Remove the screws A 2. Lift cover B up and detach it

Mass of the devices

9300	Standard device	”Cold plate” device
Type	EVS93xx-**E**P [kg]	EVS93xx-**C**P [kg]
EVS9330-xP	38.0	–

4.3.2 Mounting with fixing brackets (standard)

Mounting material required from the scope of supply:

Description	Use	Quantity
Fixing bracket	Drive controller fixing	4
Hexagon head cap screw M8 × 16 mm (DIN 933)	Mounting of fixing bracket to the drive controller	4
Washer ∅ 8.4 mm (DIN 125)	For hexagon head cap screw	4
Spring washer ∅ 8 mm (DIN 127)	For hexagon head cap screw	4

Dimensions

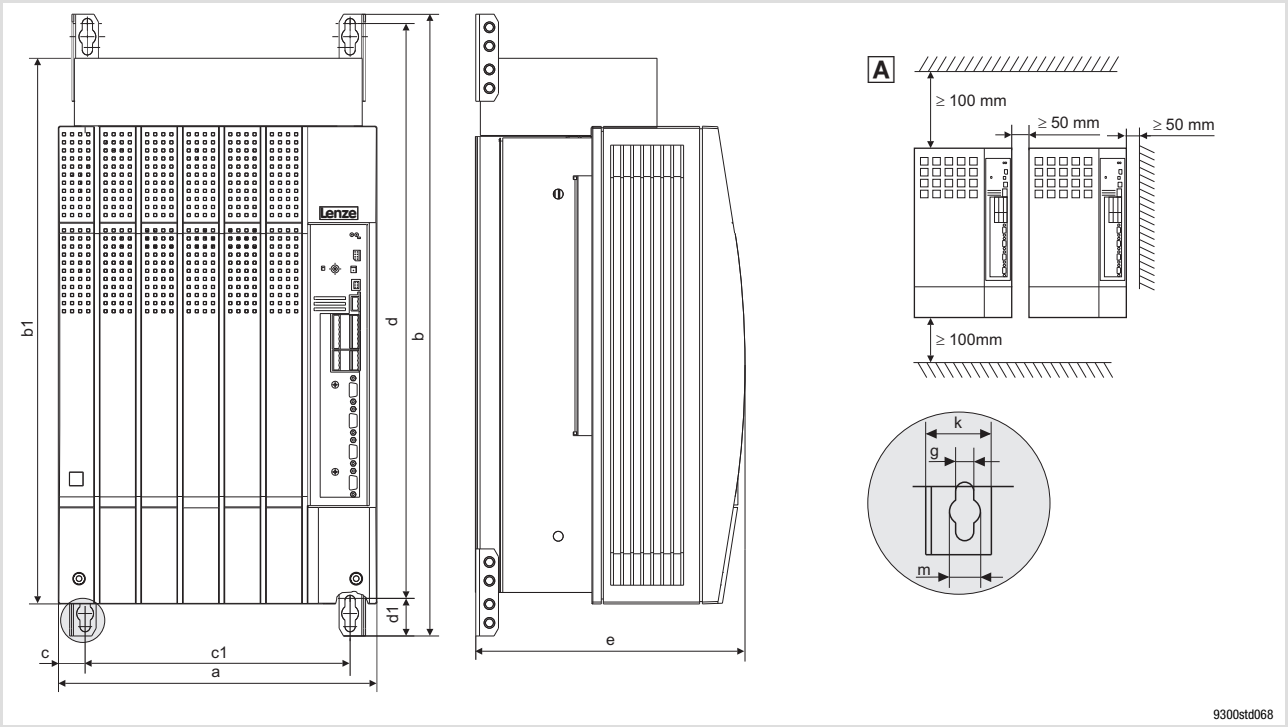

Fig. 4.3-1 Standard mounting with fixing brackets 45 kW

A Arrange drive controllers in a row with spacing to be able to remove eye bolts

9300	Dimensions [mm]										
Type	a	b	b1	c	c1	d	d1	e [1]	g	k	m
EVS9330-EP	340	580	591	28.5	283	615	38	285	11	28	18

1) For a fieldbus module plugged onto X1, consider mounting space for connecting cables

Mounting

► Attach the fixing brackets to the heatsink plate of the drive controller.

4.3.3 Thermally separated mounting (push-through technique)

For mounting in push-through technique, the drive controller of type EVS93xx-**E**Px must be used. In addition, the mounting set EJ0010 for the push-through technique is required.

Dimensions

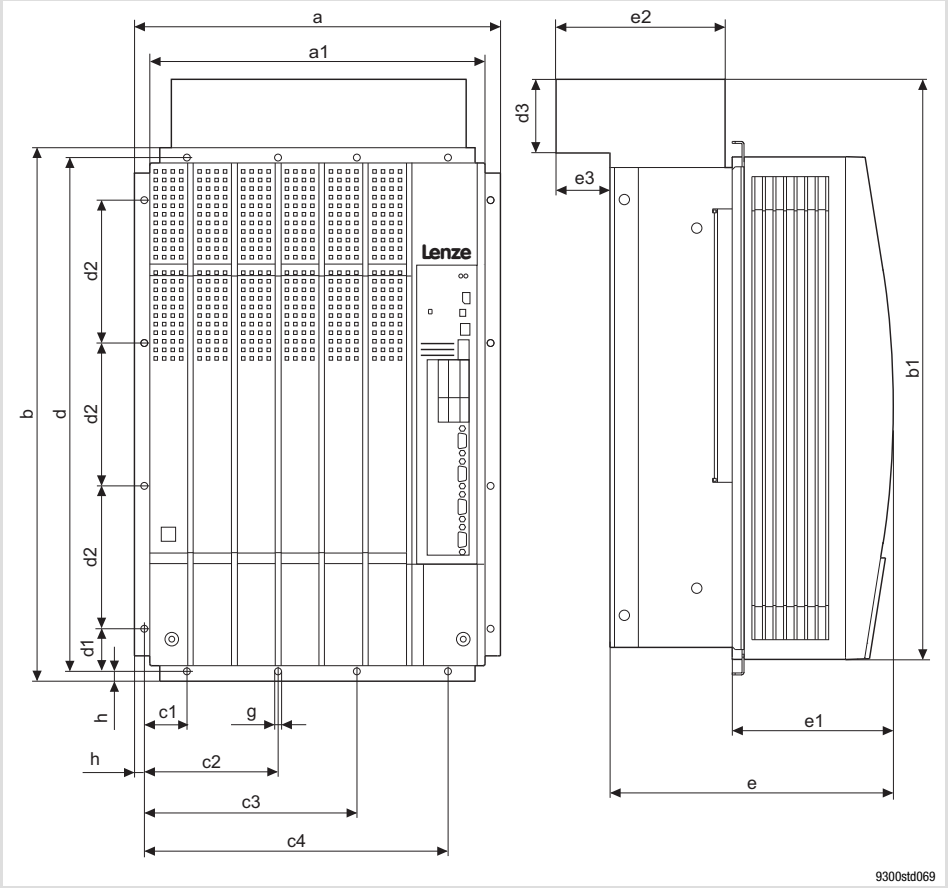

Fig. 4.3-2 Dimensions for thermally separated mounting 45 kW

9300	Dimensions [mm]																
Type	a	a1	b	b1	c1	c2	c3	c4	d	d1	d2	d3	e 1)	e1	e2	e3	g	h
EVS9330-EP	373	340	543	591	45	137.5	217.5	310	525	45	145	81	285	163.5	185	66	7	9

1) For a fieldbus module plugged onto X1, consider mounting space for connecting cables

Mounting cutout in control cabinet

9300	Dimensions [mm]	
Type	Width	Height
EVS9330-EP	320	515

4.3.4 Modification of the fan module for push-through technique

For thermally separated mounting the fan module has to be rotated by 180° so that the controller fits into the mounting cutout.

Removing the fan module

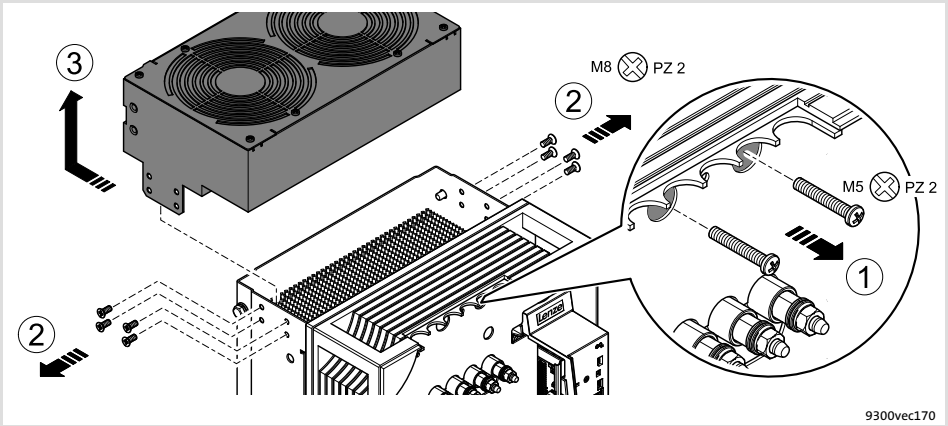

Fig. 4.3-3 Removing the fan module from the controller

1. Remove both screws.
   The screws connect the fans to the supply voltage.
2. Remove the 4 screws for fixing the fan module on each side.
3. Pull back the fan module and carefully remove it to the top.
   Make sure that the threaded sleeves do not touch the housing edge. They may break off.

Modifying the threaded sleeves on the fan module

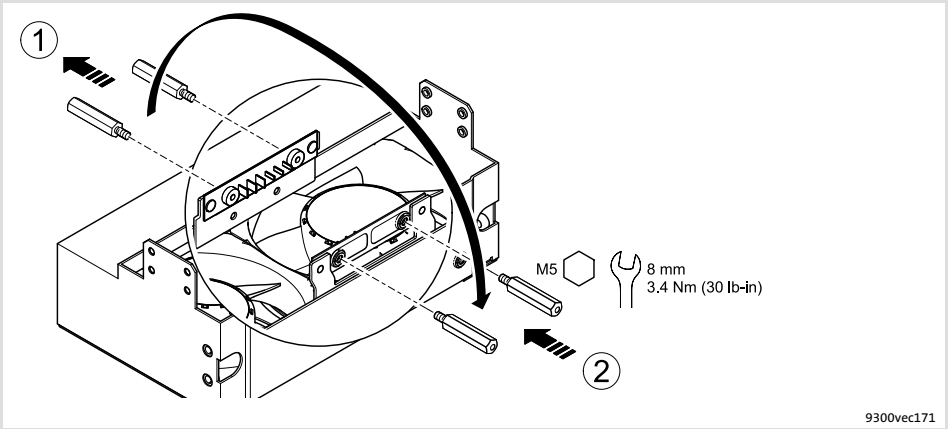

Fig. 4.3-4 Modifying the threaded sleeves for the voltage supply of the fans

1. Remove the threaded sleeves.
2. Screw-in the threaded sleeves on the opposite side and fasten them.

Plugging the fan connecting cable to another terminal on the fan module

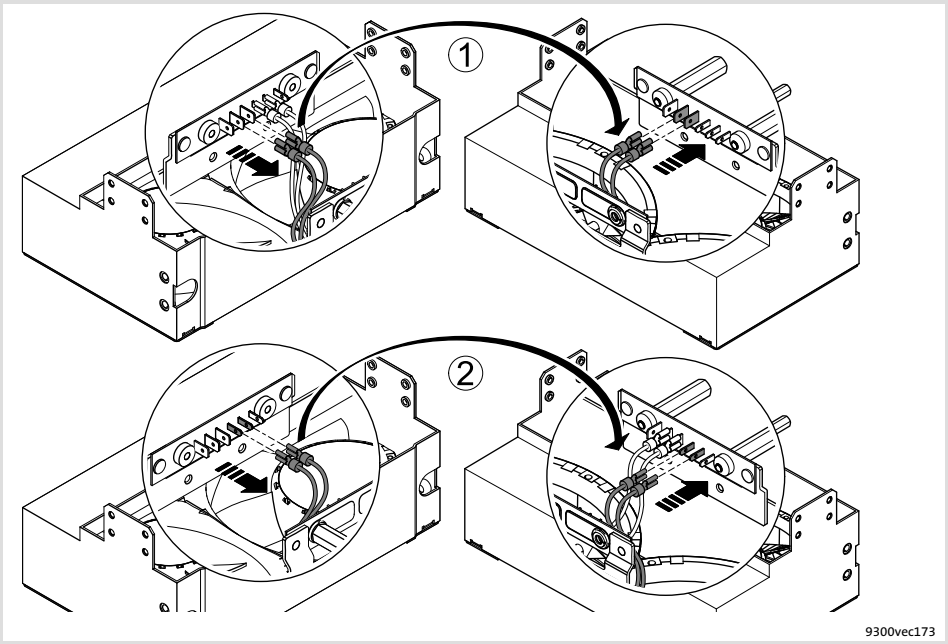

Fig. 4.3-5 Plugging the fan connecting cable for the voltage supply to another terminal

1. Remove the cable lugs of the two red connecting cables and plug them in again on the diagonally arranged side.
2. Remove the cable lugs of the two blue connecting cables and plug them in again on the diagonally arranged side.

Mounting the fan module in a manner rotated by 180°

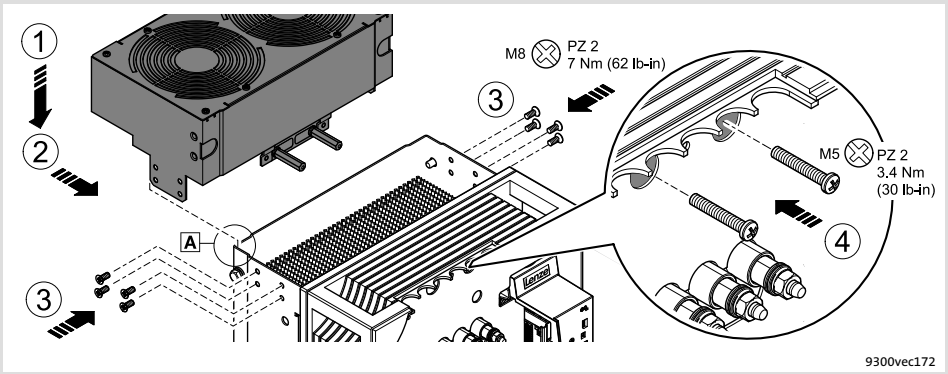

Fig. 4.3-6 Mounting the fan module on the controller

1. Place the fan module onto the controller. Insert the lugs at the back into the base plate A.

   Make sure that the threaded sleeves do not touch the housing edge. They may break off.
2. Push the fan module to the front.
3. Screw-in and fasten the 4 screws for fixing the fan module on each side.
4. Screw-in and fasten the two screws for the supply voltage.

4.4 Standard devices in the power range 55 ... 75 kW

4.4.1 Important notes

The accessory kit is located inside the controller.

Remove the cover of the drive controller	
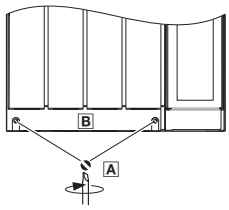	1. Remove the screws A 2. Lift cover B up and detach it

Mass of the devices

9300	Standard device	”Cold plate” device
Type	EVS93xx-**E**P [kg]	EVS93xx-**C**P [kg]
EVS9331-xP	59.0	–
EVS9332-xP	59.0	–

4.4.2 Mounting with fixing brackets (standard)

Mounting material required from the scope of supply:

Description	Use	Quantity
Fixing bracket	Drive controller fixing	4
Hexagon head cap screw M8 × 16 mm (DIN 933)	For fixing bracket	8
Washer ∅ 8.4 mm (DIN 125)	For hexagon head cap screw	8
Spring washer ∅ 8 mm (DIN 127)	For hexagon head cap screw	8

Dimensions

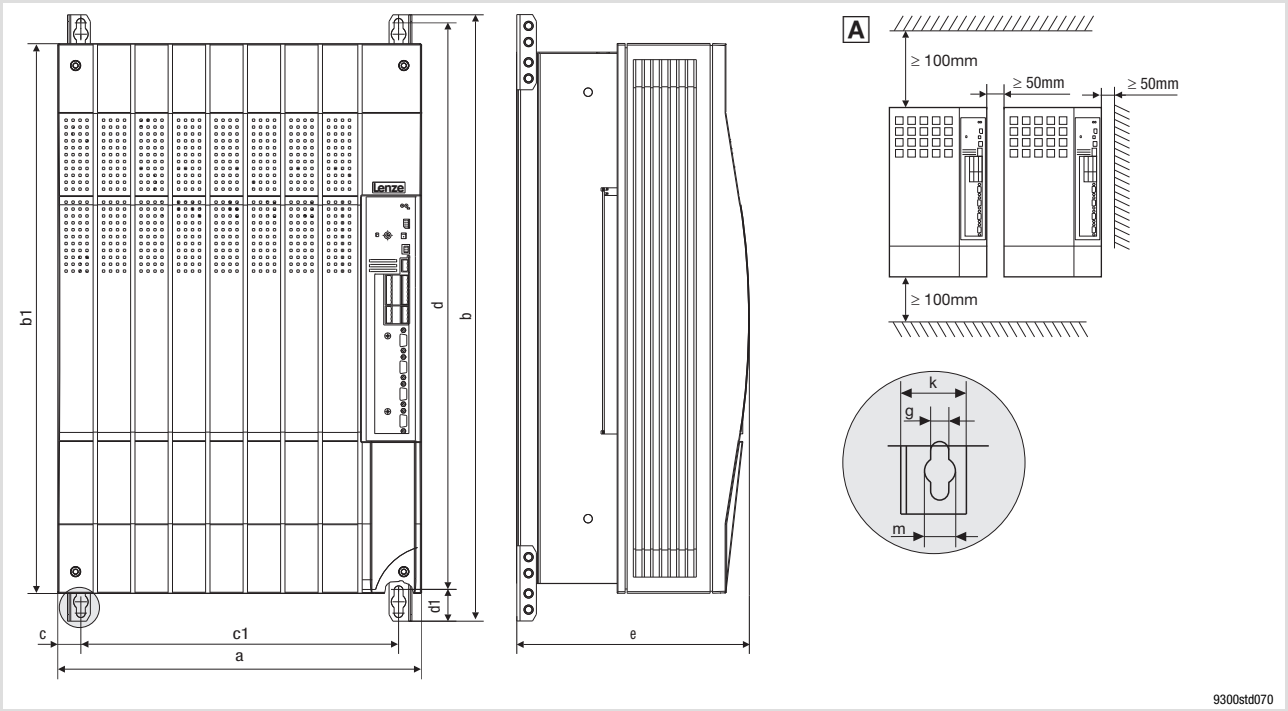

Fig. 4.4-1 Standard mounting with fixing brackets 55 ... 75 kW

A Arrange drive controllers in a row with spacing to be able to remove eye bolts

9300	Dimensions [mm]										
Type	a	b	b1	c	c1	d	d1	e [1]	g	k	m
EVS9331-EP EVS9332-EP	450	750	680	28.5	393	702	38	285	11	28	18

1) For a fieldbus module plugged onto X1, consider mounting space for connecting cables

Mounting

► Attach the fixing brackets to the heatsink plate of the drive controller.

4.4.3 Thermally separated mounting (push-through technique)

For mounting in push-through technique, the drive controller of type EVS93xx-**E**Px must be used. In addition, the mounting set EJ0009 for the push-through technique is required.

Dimensions

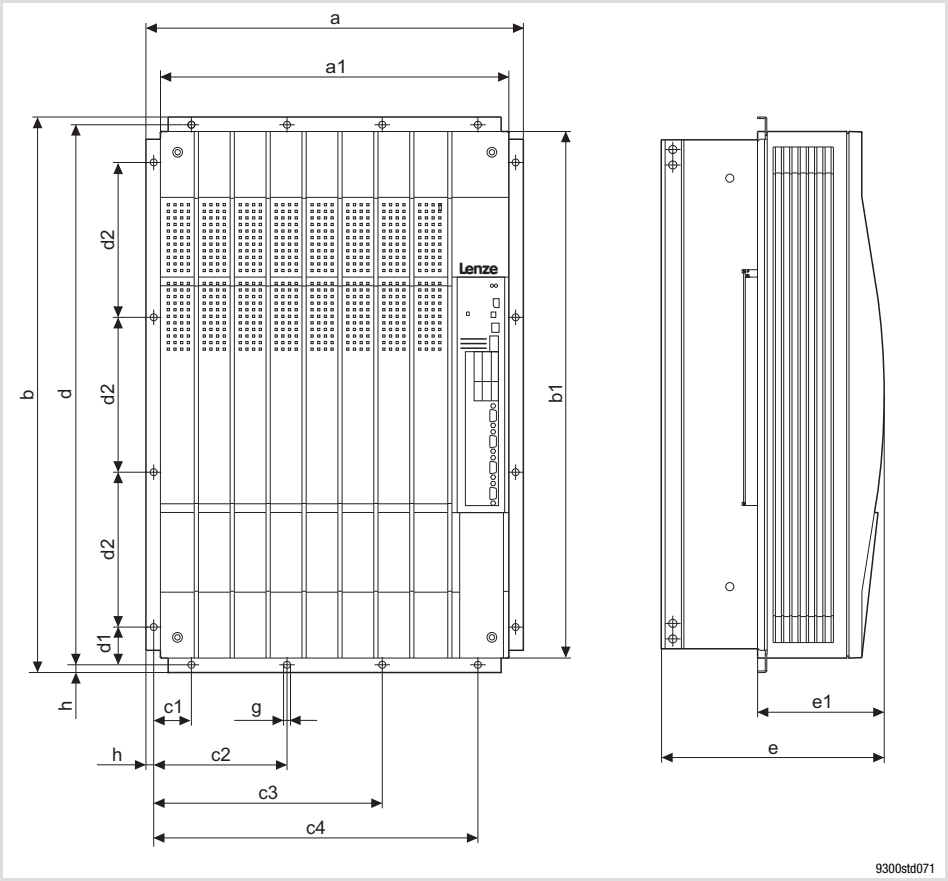

Fig. 4.4-2 Dimensions for thermally separated mounting 55 ... 75 kW

9300	Dimensions [mm]														
Typ	a	a1	b	b1	c1	c2	c3	c4	d	d1	d2	e [1]	e1	g	h
EVS9331-EP EVS9332-EP	488	450	718	680	49	172.5	295.5	419	698	49	200	285	164	9	10

[1] For a fieldbus module plugged onto X1, consider mounting space for connecting cables

Mounting cutout in control cabinet

9300	Dimensions [mm]	
Type	a1	b1
EVS9331-EP EVS9332-EP	428.5	660

5 Wiring of the standard device

Contents

5.1 Important notes 5.1-1
5.1.1 Protection of persons 5.1-1
5.1.2 Device protection 5.1-3
5.1.3 Motor protection 5.1-3
5.2 Notes on project planning 5.2-1
5.2.1 Supply forms / electrical supply conditions 5.2-1
5.2.2 Operation on public supply systems (EN 61000-3-2) 5.2-1
5.2.3 Controllers in the IT system 5.2-2
5.2.4 Operation at earth-leakage circuit breaker (e.l.c.b.) 5.2-3
5.2.5 Interaction with compensation equipment 5.2-3
5.2.6 Discharge current for mobile systems 5.2-4
5.2.7 Optimisation of the controller and mains load 5.2-5
5.2.8 Reduction of noise emissions 5.2-6
5.2.9 Mains choke/mains filter assignment 5.2-7
5.2.10 Motor cable 5.2-8
5.3 Basics for wiring according to EMC 5.3-1
5.3.1 Shielding 5.3-1
5.3.2 Mains connection, DC supply 5.3-1
5.3.3 Motor cable 5.3-1
5.3.4 Control cables 5.3-3
5.3.5 Installation in the control cabinet 5.3-4
5.3.6 Wiring outside of the control cabinet 5.3-5
5.3.7 Detecting and eliminating EMC interferences 5.3-6
5.4 Standard devices in the power range 0.37 ... 11 kW 5.4-1
5.4.1 Wiring according to EMC (CE-typical drive system) 5.4-1
5.4.2 Important notes 5.4-3
5.4.3 Mains connection, DC supply 5.4-4
5.4.4 Mains connection: Fuses and cable cross-sections 5.4-6
5.4.5 Mains choke/mains filter assignment 5.4-7
5.4.6 Motor connection 5.4-8
5.5 Standard devices in the power range 15 ... 30 kW 5.5-1
5.5.1 Wiring according to EMC (CE-typical drive system) 5.5-1
5.5.2 Important notes 5.5-3
5.5.3 Mains connection, DC supply 5.5-3
5.5.4 Mains connection: Fuses and cable cross-sections 5.5-5
5.5.5 Mains choke/mains filter assignment 5.5-6
5.5.6 Motor connection 5.5-7

5.6 Standard devices with a power of 45 kW 5.6-1
5.6.1 Wiring according to EMC (CE-typical drive system) 5.6-1
5.6.2 Important notes 5.6-3
5.6.3 Mains connection, DC supply 5.6-4
5.6.4 Mains connection: Fuses and cable cross-sections 5.6-5
5.6.5 Mains choke/mains filter assignment 5.6-6
5.6.6 Motor connection 5.6-7
5.7 Standard devices in the power range 55 ... 75 kW 5.7-1
5.7.1 Wiring according to EMC (CE-typical drive system) 5.7-1
5.7.2 Important notes 5.7-3
5.7.3 Mains connection, DC supply 5.7-4
5.7.4 Mains connection: Fuses and cable cross-sections 5.7-5
5.7.5 Mains choke/mains filter assignment 5.7-6
5.7.6 Motor connection 5.7-7
5.8 Control terminals 5.8-1
5.8.1 Important notes 5.8-1
5.8.2 Connection terminal of the control card 5.8-3
5.8.3 Device variant without ”Safe torque off” function 5.8-4
5.8.4 Device variant with ”Safe torque off” function 5.8-5
5.8.5 State bus 5.8-8
5.8.6 Terminal assignment 5.8-9
5.8.7 Technical data 5.8-10
5.9 Wiring of the system bus (CAN) 5.9-1
5.10 Wiring of the feedback system 5.10-1
5.10.1 Important notes 5.10-1
5.10.2 Resolver at X7 . . . . . 5.10-2
5.10.3 Incremental encoder with TTL level at X8 . . . . . 5.10-3
5.10.4 SinCos encoder at X8 . . . . . 5.10-4
5.11 Wiring of digital frequency input / digital frequency output 5.11-1

5.1 Important notes

Stop!

The drive controller contains electrostatically sensitive components.

The personnel must be free of electrostatic charge when carrying out assembly and service operations.

5.1.1 Protection of persons

Danger!

Before working on the controller, check that all power terminals are deenergised:

- ► The power terminals U, V, W, $+U_G$ and $-U_G$ remain live for at least 3 minutes after disconnection from the mains.
- ► The power terminals L1, L2, L3, U, V, W, $+U_G$ and $-U_G$ remain live when the motor is stopped.

Pluggable terminal strips

Connect or disconnect all pluggable terminals only in the deenergised state!

Electrical isolation

The terminals X1 and X5 have double (reinforced) insulation according to EN50178. The protection against accidental contact is ensured without additional measured being taken.

Danger!

- ► The terminals X3, X4, X6, X7, X8, X9, X10, X11 have basic insulation (single isolating distance).
- ► In the event of a defective isolating distance, protection against accidental contact can only be guaranteed by taking external measures such as double insulation.
- ► If an external DC 24 V voltage source is used, the insulation degree of the controller depends on the insulation degree of the voltage source.

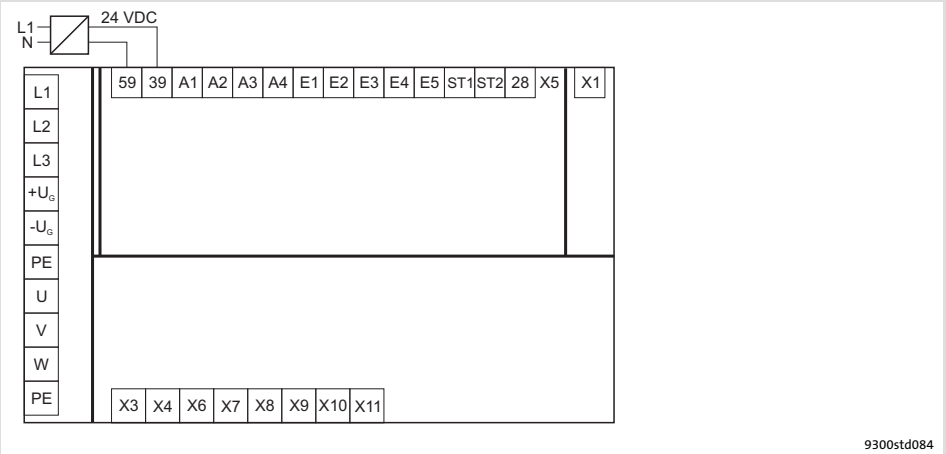

Fig. 5.1-1 Electrical isolation between power terminals, control terminals and housing

Double (reinforced) insulation
Basic insulation

Replacing defective fuses

Only replace defective fuses in the deenergised state to the type specified.

Disconnecting the controller from the mains

Only carry out the safety-related disconnection of the controller from the mains via a contactor on the input side or a manually operated toggle switch.

5.1.2 Device protection

- ► In the event of condensation, only connect the controller to the mains voltage after the humidity has evaporated.
- ► The controller is protected by external fuses.
- ► Drive controllers EVS9324-xP, EVS9326-xP and EVS9328-xP ... EVS9332-xP must only be operated with assigned mains choke / mains filter.
- ► Length of the screws for connecting the shield sheet for the control cables: **12 mm**.
- ► Provide unused control inputs and outputs with terminal strips. Cover unused Sub-D sockets with protective covers included in the scope of supply.
- ► Switching on the motor side of the controller is only permissible for safety shutdown (emergency-off).
- ► Frequent mains switching (e.g. inching mode via mains contactor) can overload and destroy the input current limitation of the drive controller:
  - At least 3 minutes must pass between switching off and restarting the devices EVS9321-xP and EVS9322-xP.
  - At least 3 minutes must pass between two starting procedures of the devices EVS9323-xP ... EVS9332-xP.
  - Use the ”safe torque off” safety function (STO) if safety-related mains disconnections occur frequently. The drive variants Vxx4 are equipped with this function.

5.1.3 Motor protection

- ► Extensive protection against overload:
  - By overcurrent relays or temperature monitoring.
  - We recommend the use of PTC thermistors or thermostats to monitor the motor temperature.
  - PTC thermistors or thermostats can be connected to the controller.
  - For monitoring the motor, we recommend the use of the I^2xt monitoring.
- ► Only use motors with an insulation suitable for the inverter operation:
  - Insulation resistance: min. $\hat{u}$ = 1.5 kV, min. du/dt = 5 kV/µs
  - When using motors with an unknown insulation resistance, please contact your motor supplier.

5.2 Notes on project planning

5.2.1 Supply forms / electrical supply conditions

Observe the restrictions for the different supply forms!

Supply system	Operation of controller	Notes
Supply system: TT, TN (with earthed neutral)	Permitted without restrictions.	● Observe the rated data of the controller ● RMS mains current: see chapter ”Technical data”.
Supply system: IT (with isolated neutral)	Possible if the controller is protected in the event of an earth fault in the supply system ● by means of suitable devices which detect the earth fault and ● immediately separate the controller from the supply system.	● Safe operation in the event of an earth fault at the inverter output cannot be guaranteed. ● The variants V024 / V104 and V100 enable operation of the controller on IT systems.
DC supply via $+U_G/-U_G$	Permitted if the DC voltage is symmetrical to PE.	Earthing of the $+U_G$ or $-U_G$ conductor will destroy the controller.

5.2.2 Operation on public supply systems (compliance with EN 61000-3-2)

European standard EN 61000-3-2 defines limit values for the limitation of harmonic currents in the supply system. Non-linear consumers (e.g. frequency inverters) generate harmonic currents which ”pollute” the supplying mains and may therefore interfere with other consumers. The standard aims at assuring the quality of public supply systems and reducing the mains load.

Note!

The standard only applies to public systems. Mains which are provided with a transformer substation of their own as in industrial plants are not public and not included in the application range of the standard.

If a device or machine consists of several components, the limit values of the standard apply to the entire unit.

Measures for compliance with the standard

With the measures described, the controllers comply with the limit values according to EN 61000-3-2.

Operation on public supply systems	EN 61000-3-2	Limitation of harmonic currents
	Total power on the mains	Compliance with the requirements [1)]
	< 1 kW	With mains choke
	> 1 kW	No measures required

1) The additional measures mentioned have the effect that solely the controllers meet the requirements of EN 61000-3-2. The machine/system manufacturer is responsible for the compliance with the requirements for the machine/system!

5.2.3 Controllers in the IT system

Controllers in the V024, V104 or V100 variants are suitable for operation on insulated supply systems (IT systems). The controllers also have an insulated design. This avoids the activation of the insulation monitoring, even if several controllers are installed.

The electric strength of the controllers is increased so that damage to the controller are avoided if insulation or earth faults in the supply system occur. The operational reliability of the system remains intact.

Stop!

Only operate the controllers with the mains chokes assigned.

Operation with mains filters or RFI filters by Lenze is not permitted, as these modules contain components that are interconnected against PE. By this the protective design of the IT system would be cancelled out. The components are destroyed in the case of an earth fault.

Protect the IT system against earth fault at the controller.

Due to physical conditions, an earth fault on the motor side at the controller can interfere with or damage other devices on the same IT system. Therefore appropriate measures have to be implemented, by means of which the earth fault is detected and which disconnect the controller from the mains.

Permissible supply forms and electrical supply conditions

Mains	Operation of the controllers	Notes
With isolated star point (IT systems)	Possible, if the controller is protected in the event of an earth fault in the supplying mains. ● Possible, if appropriate earth fault detections are available and ● the controller is immediately disconnected from the mains.	Safe operation in the event of an earth fault at the inverter output cannot be guaranteed.

DC-bus operation of several drives

Central supply with 9340 regenerative power supply module is not possible.

Installation of the CE-typical drive system

For the installation of drives on IT systems, the same conditions apply as for the installation on systems with an earthed neutral point.

According to the binding EMC product standard EN61800-3, no limit values are defined for IT systems for noise emission in the high-frequency range.

5.2.4 Operation at earth-leakage circuit breaker (e.l.c.b.)

Danger!

The controllers are internally fitted with a mains rectifier. In case of a short circuit to frame a pulsating DC residual current can prevent the AC sensitive or pulse current sensitive earth-leakage circuit breakers from being activated, thus cancelling the protective function for the entire equipment being operated on this earth-leakage circuit breaker.

- ► For the protection of persons and farm animals (DIN VDE 0100), we recommend
  - – pulse current sensitive earth-leakage circuit breakers for plants including controllers with a single-phase mains connection (L1/N).
  - – universal-current sensitive earth-leakage circuit breakers for plants including controllers with a three-phase mains connection (L1/L2/L3).
- ► Only install the earth-leakage circuit breaker between supplying mains and drive controller.
- ► Earth-leakage circuit breakers may trigger a false alarm due to
  - – capacitive compensation currents flowing in the cable shields during operation (particularly with long, shielded motor cables),
  - – simultaneous connection of several inverters to the mains
  - – the use of additional interference filters.

5.2.5 Interaction with compensation equipment

- ► Controllers only consume very little reactive power of the fundamental wave from the AC supply mains. Therefore, a compensation is not required.
- ► If the controllers are connected to a supply system with compensation equipment, this equipment must comprise chokes.
  - – For this, contact the supplier of the compensation equipment.

5.2.6 Discharge current for mobile systems

Frequency inverters with internal or external RFI filters usually have a discharge current to PE potential that is higher than 3.5 mA AC or 10 mA DC.

Therefore, fixed installation as protection is required (see EN 61800-5-1). This must be indicated in the operational documents.

If a fixed installation is not possible for a mobile consumer although the discharge current to PE potential is higher than 3.5 mA AC or 10 mA DC, an additional two-winding transformer (isolating transformer) can be included in the current supply as a suitable countermeasure. Here, the PE conductor is connected to the PEs of the drive (filter, inverter, motor, shieldings) and also to one of the poles of the secondary winding of the isolating transformer.

Devices with a three-phase supply must have a corresponding isolating transformer with a secondary star connection, the star point being connected to the PE conductor.

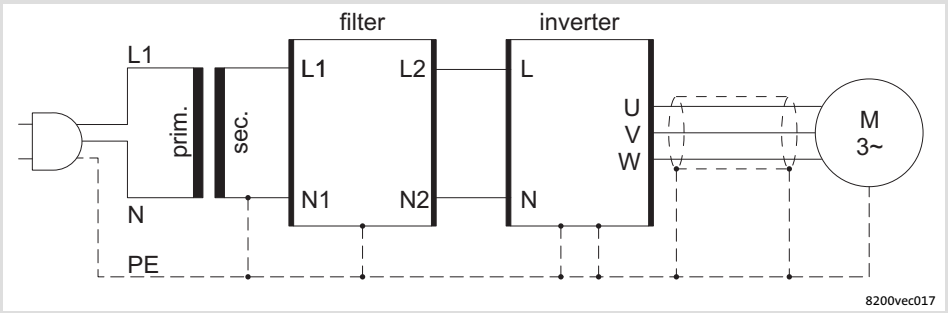

Fig. 5.2-1 Installation of a two-winding transformer (isolating transformer)

5.2.7 Optimisation of the controller and mains load

A mains choke is an inductance which can be included in the mains cable of the frequency inverter. As a result, the load of the supplying mains and the controller is optimised:

- ► Reduced system perturbation: The curved shape of the mains current approaches a sinusoidal shape.
- ► Reduced mains current: The effective mains current is reduced, i.e. the mains, cable, and fuse loads are reduced.
- ► Increased service life of the controller: The electrolytic capacitors in the DC bus have a considerably increased service life due to the reduced AC current load.

There are no restrictions for the combinations of mains chokes and RFI filters and/or motor filters. Alternatively, a mains filter can be used (combination of mains choke and RFI filter in a common housing).

Note!

- ► Some controllers must generally be operated with a mains choke or a mains filter.
- ► If a mains choke or a mains filter is used, the maximum possible output voltage does not reach the value of the mains voltage (typical voltage drop at the rated point 4 ... 6 %).

5.2.8 Reduction of noise emissions

Due to internal switching operations, every controller causes noise emissions which may interfere with the functions of other consumers. Depending on the site of the frequency inverter, European standard EN 61800-3 defines limit values for these noise emissions:

Limit class C2: Limit class C2 is often required for industrial mains which are isolated from the mains of residential areas.

Limit class C1: If the controller is operated in a residential area, it may interfere with other devices such as radio and television receivers. Here, interference suppression measures according to limit class C1 are often required.

Limit class C1 is much more strict than limit class C2. Limit class C1 includes limit class C2.

For compliance with limit class C1 / C2, corresponding measures for the limitation of noise emissions are required, e.g. the use of RFI filters.

There are no restrictions for the combinations of RFI filters and mains chokes and/or motor filters. Alternatively, a mains filter can be used (combination of mains choke and RFI filter in a common housing).

The selection of the frequency inverter and the corresponding filters, if applicable, always depends on the application in question and is determined by e.g. the switching frequency of the controller, the motor cable length, or the protective circuit (e.g. earth-leakage circuit breakers).

Note!

- ► Some controllers must generally be operated with a mains choke or a mains filter.
- ► If a mains choke or a mains filter is used, the maximum possible output voltage does not reach the value of the mains voltage (typical voltage drop at the rated point 4 ... 6 %).

The graphics below illustrates the maximum possible motor cable length based on the type of filter and the resulting interference voltage category according to EN 61800-3. Depending on the used motor cable, the used controller, and its switching frequency, the mentioned maximum motor cable lengths may vary.

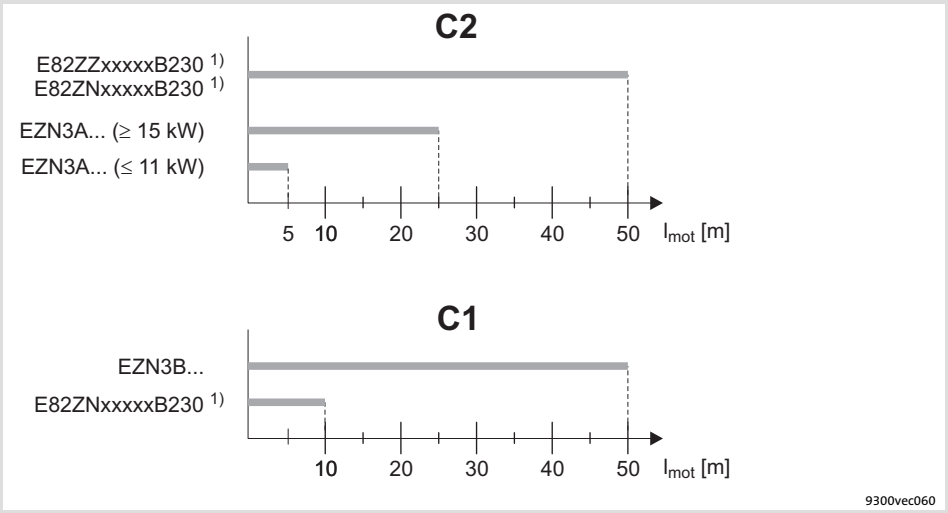

Fig. 5.2-2 Maximum motor cable lengths l_{mot} based on the type of filter for compliance with limit class C2 / C1

1) Use low-capacitance cables

5.2.9 Mains choke/mains filter assignment

9300	Mains choke	Interference voltage category according to EN 61800-3 and motor cable length			
		Component		Component	
Type		C2	max. [m]	C1	max. [m]
EVS9321-xP	EZN3A2400H002	EZN3A2400H002	5	EZN3B2400H002	50
EVS9322-xP	EZN3A1500H003	EZN3A1500H003	5	EZN3B1500H003	50
EVS9323-xP	EZN3A0900H004	EZN3A0900H004	5	EZN3B0900H004	50
EVS9324-xP	EZN3A0500H007	EZN3A0500H007	5	EZN3B0500H007	50
EVS9325-xP	EZN3A0300H013	EZN3A0300H013	5	EZN3B0300H013	50
EVS9326-xP	ELN3-0150H024-001	EZN3A0150H024	5	EZN3B0150H024	50
EVS9327-xP	ELN3-0088H035-001	EZN3A0110H030	25	E82ZN22334B230	10
				E82ZZ15334B230 1)	10
		E82ZN22334B230	50	EZN3B0110H030U 2)	50
		E82ZZ15334B230 1)	50		
EVS9328-xP	ELN3-0075H045	EZN3A0080H042	25	E82ZN22334B230	10
		E82ZN22334B230	50	EZN3B0080H042	50
EVS9329-xP	ELN3-0055H055	EZN3A0055H060	25	E82ZN30334B230	10
		E82ZN30334B230	50	EZN3B0055H060	50
EVS9330-xP	ELN3-0038H085	EZN3A0030H110	25	EZN3B0030H110	50
		EZN3A0030H110N001 3)	25		
		E82ZN55334B230	50		
EVS9331-xP	ELN3-0027H105	EZN3A0022H150	25	E82ZN75334B230	10
		E82ZN75334B230	50	EZN3B0022H150	50
EVS9332-xP	ELN3-0022H130	EZN3A0022H150	25	E82ZN75334B230	10
		E82ZN75334B230	50	EZN3B0022H150	50

1) RFI filter
2) Footprint filter
3) For controllers with thermal separation

5.2.10 Motor cable

Specification

► The used motor cables must
– meet the requirements on site (e.g. EN 60204-1, UL),
– comply with the following voltage data: EN 0.6/1 kV, UL 600 V.

► For shielded motor cables, only use cables with braid made of tinned or nickel-plated copper. Shields made of steel braid are not suitable.
– The overlap rate of the braid must be at least 70 % with an overlap angle of 90°.

► Use low-capacitance motor cables:

Power class	Capacitance per unit length	
	Core/core	Core/shield
3 ... 11 kW	from 2.5 mm² ≤100 pF/m	≤ 150 pF/m
15 ... 30 kW	≤ 140 pF/m	≤ 230 pF/m
45 ... 55 kW	≤ 190 pF/m	≤ 320 pF/m
75 ... 90 kW	≤ 250 pF/m	≤ 410 pF/m

Cable length

9300	Maximum permissible motor cable length			
	U_r = 400 V		U_r = 480 V	
Type	f_{chop} = 8 kHz	f_{chop} = 16 kHz	f_{chop} = 8 kHz	f_{chop} = 16 kHz
EVS9321-xP, EVS9322-xP	50 m	45 m	50 m	25 m
EVS9323-xP ... EVS9332-xP	50 m	50 m	50 m	50 m

Note!

► The motor cable must be as short as possible for having a positive effect on the drive behaviour.

► If EMC requirements must be met, the permissible cable length may be affected.

► EVS9321-xPand EVS9322-xP: At a mains voltage of 480 V and a switching frequency f_{chop} = 16 kHz, the maximum permissible cable length is reduced if the motor cable has more than a single core:
– The following holds true for two parallel single cores: l_{max} = 17 m
– The following holds true for three parallel single cores: l_{max} = 9 m

Cable cross-section

Note!

The cable cross-sections have been assigned to the permissible current loading of the motor cables under the following conditions:

- ► Compliance with IEC/EN 60204-1 for fixed cable installation
- ► Compliance with IEC 60354-2-52, table A.52-5 when using the cable in a trailing cable
- ► Laying system C
- ► Ambient temperature 45 °C
- ► Continuous motor operation at a
  - – standstill current I_0 for servo motors or a
  - – rated current I_R for three-phase asynchronous motors

The user is responsible for selecting a motor cable which complies with the requirements of the current conditions if different situations arise. Different situations may arise due to:

- ► Laws, standards, national and regional regulations
- ► Type of application
- ► Motor utilisation
- ► Ambient and operating conditions
- ► Laying system and bundling of cables
- ► Cable type

Motor cable			
permanently installed	**for trailing cable**	**Cable cross-section**	
I_M [A]	I_M [A]	[mm²]	[AWG]
10.0	11.8	1.0	18
13.8	17.3	1.5	16
19.1	23.7	2.5	14
25.5	30.9	4.0	12
32.8	41.0	6.0	10
45.5	55.5	10	8
60.1	75.5	16	6
76.4	92.8	25	4
94.6	115	35	2
114	140	50	1
146	179	70	00
177	217	95	000
205	252	120	0000

Note!

Information on the design of the motor cable is provided in the ”System cables and system connectors” manual.

5.3 Basics for wiring according to EMC

5.3.1 Shielding

The quality of shielding is determined by a good shield connection:

- ► Connect the shield with a large surface.
- ► Connect the shield directly to the intended shield sheet of the device.
- ► In addition, connect the shield to the conductive and earthed mounting plate with a large contact surface by using a conductive clamp.
- ► Unshielded cable ends must be as short as possible.

5.3.2 Mains connection, DC supply

- ► Controllers, mains chokes, or mains filters may only be connected to the mains via unshielded single cores or unshielded cables.
- ► When a mains filter or RFI filter is used, shield the cable between mains filter or RFI filter and controller if its length exceeds 300 mm. Unshielded cores must be twisted.
- ► In DC-bus operation or DC supply, use shielded cables.
- ► The cable cross-section must be dimensioned for the assigned fusing (observe national and regional regulations).

5.3.3 Motor cable

- ► Only use shielded motor cables with braids made of tinned or nickel-plated copper. Shields made of steel braids are not suitable.
  - – The overlap rate of the braid must be at least 70 % with an overlap angle of 90 °.
- ► The cables used must correspond to the requirements at the location (e.g. EN 60204-1).
- ► Shield the cable for motor temperature monitoring (PTC or thermal contact) and install it separately from the motor cable.
  - – In Lenze system cables, the cable for brake control is integrated into the motor cable. If this cable is not required for brake control, it can also be used to connect the motor temperature monitoring up to a length of 50 m.
- ► Connect the shield with a large surface and fix it with metal cable binders or a conductive clamp.
- ► Connect the shield directly to the corresponding device shield sheet.
  - – If required, additionally connect the shield to the conductive and earthed mounting plate in the control cabinet.
- ► The motor cable is optimally installed if
  - – it is separated from mains cables and control cables,
  - – it only crosses mains cables and control cables at right angles,

– it is not interrupted.

► If the motor cable must be opened all the same (e.g. due to chokes, contactors, or terminals):
  – The unshielded cable ends may not be longer than 100 mm (depending on the cable cross-section).
  – Install chokes, contactors, terminals etc. spatially separated from other components (with a min. distance of 100 mm).
  – Install the shield of the motor cable directly before and behind the point of separation to the mounting plate with a large surface.

► Connect the shield with a large surface to PE in the terminal box of the motor at the motor housing.
  – Metal EMC cable glands at the motor terminal box ensure a large surface connection of the shield with the motor housing.

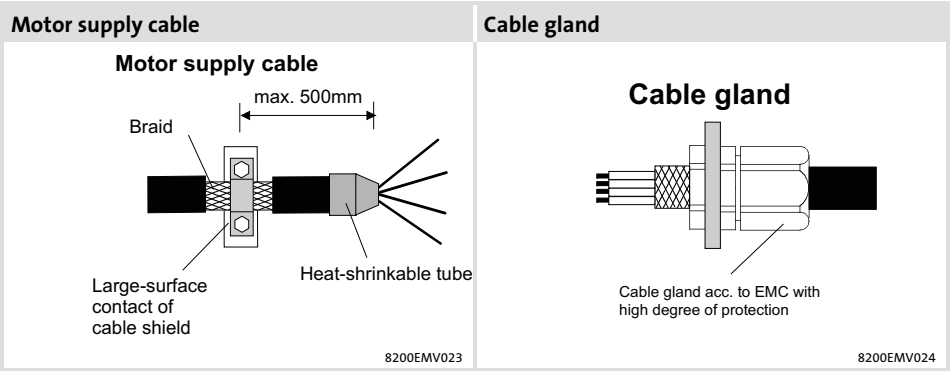

Fig. 5.3-1 Shielding of the motor cable

5.3.4 Control cables

- ► Control cables must be shielded to minimise interference injections.
- ► For lengths of 200 mm and more, use only shielded cables for analog and digital inputs and outputs. Under 200 mm, unshielded but twisted cables may be used.
- ► Connect the shield correctly:
  - – The shield connections of the control cables must be at a distance of at least 50 mm from the shield connections of the motor cables and DC cables.
  - – Connect the shield of digital input and output cables at both ends.
  - – Connect the shield of analog input and output cables at one end (at the drive controller).
- ► To achieve an optimum shielding effect (in case of very long cables, with high interference) one shield end of analog input and output cables can be connected to PE potential via a capacitor (e.g. 10 nF/250 V) (see sketch).

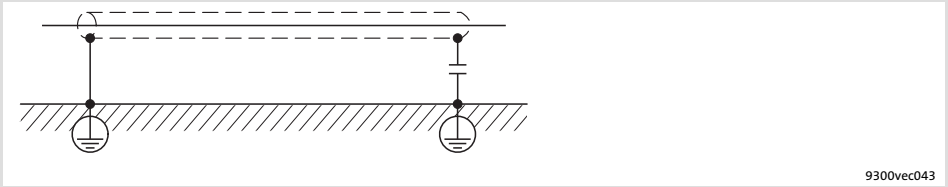

Fig. 5.3-2 Shielding of long, analog control cables

5.3.5 Installation in the control cabinet

Mounting plate requirements

- ► Only use mounting plates with conductive surfaces (zinc-coated or V2A-steel).
- ► Painted mounting plates are not suitable even if the paint is removed from the contact surfaces.
- ► If several mounting plates are used, ensure a large-surface connection between the mounting plates (e.g. by using earthing strips).

Mounting of the components

- ► Connect controllers, filters, and chokes to the earthed mounting plate with a surface as large as possible.

Optimum cable routing

- ► The motor cable is optimally installed if
  – it is separated from mains cables and control cables,
  – it crosses mains cables and control cables at right angles.
- ► Always install cables close to the mounting plate (reference potential), as freely suspended cables act like aerials.
- ► Lead the cables to the terminals in a straight line (avoid tangles of cables).
- ► Use separated cable channels for motor cables and control cables. Do not mix up different cable types in one cable channel.
- ► Minimise coupling capacities and coupling inductances by avoiding unnecessary cable lengths and reserve loops.
- ► Short-circuit unused cores to the reference potential.
- ► Install the positive and negative wires for DC 24 V close to each other over the entire length to avoid loops.

Earth connections

- ► Connect all components (drive controllers, chokes, filters) to a central earthing point (PE rail).
- ► Set up a star-shape earthing system.
- ► Comply with the corresponding minimum cable cross-sections.

5.3.6 Wiring outside of the control cabinet

Notes for cable routing outside the control cabinet:

- ► The longer the cables the greater the space between the cables must be.
- ► If cables for different signal types are routed in parallel, the interferences can be minimized by means of a metal barrier or separated cable ducts.

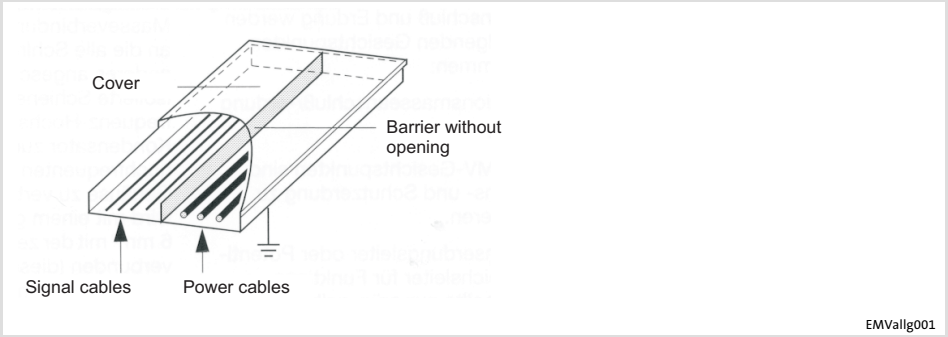

Fig. 5.3-3 Cable routing in the cable duct with barrier

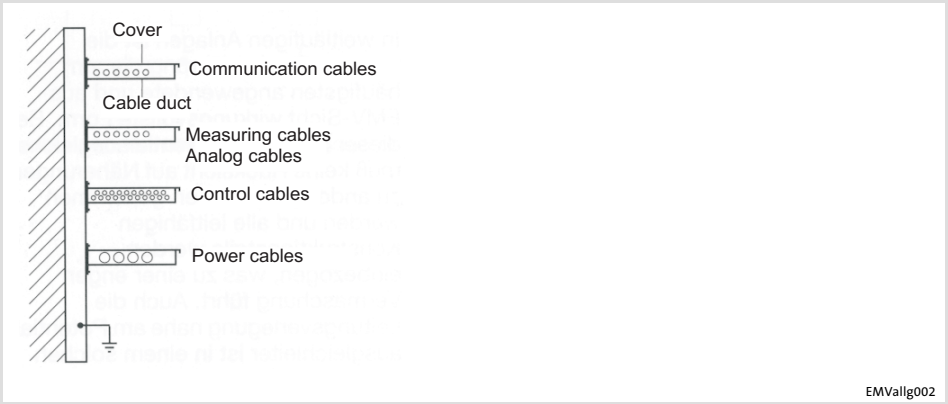

Fig. 5.3-4 Cable routing in separated cable ducts

5.3.7 Detecting and eliminating EMC interferences

Fault	Cause	Remedy
Interferences of analog setpoints of your own or other devices and measuring systems	Unshielded motor cable	Use shielded motor cable
	Shield contact is not extensive enough	Carry out optimal shielding as specified
	Shield of the motor cable is interrupted by terminal strips, switched, etc.	● Separate components from other component part with a minimum distance of 100 mm ● Use motor choke/motor filter
	Install additional unshielded cables inside the motor cable (e.g. for motor temperature monitoring)	Install and shield additional cables separately
	Too long and unshielded cable ends of the motor cable	Shorten unshielded cable ends to maximally 40 mm
Conducted interference level is exceeded on the supply side	Terminal strips for the motor cable are directly located next to the mains terminals	Spatially separate the terminal strips for the motor cable from main terminals and other control terminals with a minimum distance of 100 mm
	Mounting plate varnished	Optimise PE connection: ● Remove varnish ● Use zinc-coated mounting plate
	HF short circuit	Check cable routing

5.4 Standard devices in the power range 0.37 ... 11 kW

5.4.1 Wiring according to EMC (CE-typical drive system)

The drives comply with the EC Directive on ”Electromagnetic Compatibility” if they are installed in accordance with the specifications for the CE-typical drive system. The user is responsible for the compliance of the machine application with the EC Directive.

Note!

Observe the notes given in the chapter ”Basics for wiring according to EMC”!

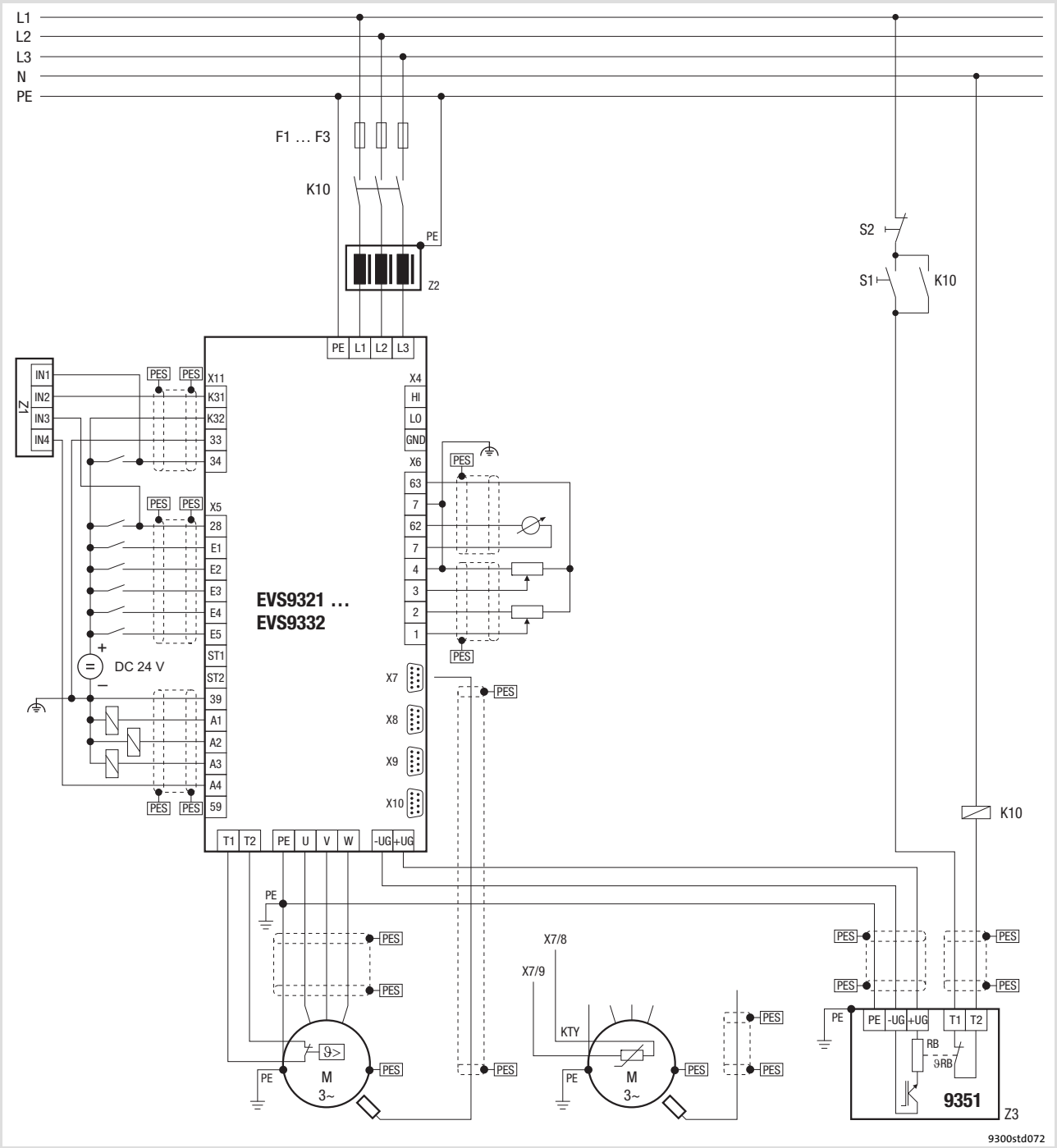

Fig. 5.4-1 Example for wiring in accordance with EMC regulations

F1 ... F3	Fuses
K10	Mains contactor
Z1	Programmable logic controller (PLC)
Z2	Mains choke or mains filter
Z3	EMB9351-E brake module
S1	Mains contactor on
S2	Mains contactor off
$+U_G$, $-U_G$	DC-bus connection
PES	HF shield termination through large-surface connection to PE

5.4.2 Important notes

To gain access to the power connections, remove the covers:

► Release the cover for the mains connection with slight pressure on the front and pull it off to the top.

► Release the cover for the motor connection with slight pressure on the front and pull it off to the bottom.

Installation material required from the scope of supply:

Description	Use	Quantity
Shield connection support	Support of the shield sheets for the supply cable and motor cable	2
Hexagon nut M5	Fastening of shield connection supports	4
Spring washer ∅ 5 mm (DIN 127)		2
Serrated lock washer ∅ 5.3 mm (DIN 125)		2
Shield sheet	Shield connections for supply cables, motor cable	2
Screw and washer assembly M4 × 10 mm (DIN 6900)	Fastening of shield sheets	4

5.4.3 Mains connection, DC supply

Note!

- ► If a mains filter or RFI filter is used and the cable length between mains/RFI filter and drive controller exceeds 300 mm, install a shielded cable.
- ► For DC-bus operation or DC supply, we recommend using shielded DC cables.

Shield sheet installation

Stop!

- ► To avoid damaging the PE stud, always install the shield sheet and the PE connection in the order displayed. The required parts are included in the accessory kit.
- ► Do not use lugs as strain relief.

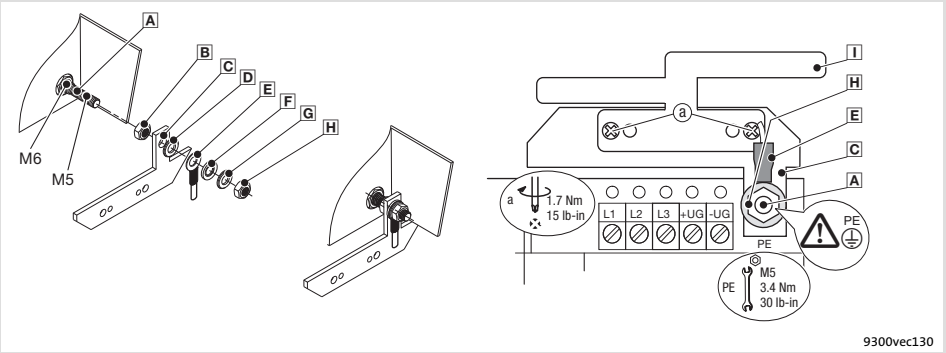

Fig. 5.4-2 Installation of shield sheet for drive controllers 0.37 ... 11 kW

- A PE stud
- B Screw on M5 nut and tighten hand-tight
- C Slide on fixing bracket for shield sheet
- D Slide on serrated lock washer
- E Slide on PE cable with ring cable lug
- F Slide on washer
- G Slide on spring washer
- H Screw on M5 nut and tighten it
- I Screw shield sheet on fixing bracket with two M4 screws (a)

Mains connection, DC supply

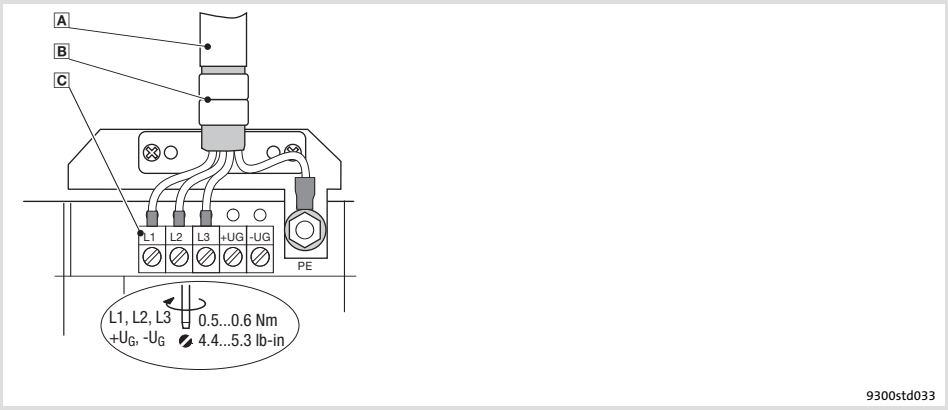

Fig. 5.4-3 Mains connection, DC supply for drive controllers 0.37 ... 11 kW

A Mains cable
B Shield sheet
Securely clamp mains cable with the lugs
C Mains and DC bus connection
L1, L2, L3: Connection of mains cable
$+U_G$, $-U_G$: Connection of DC-bus components or connection of the controller in the DC-bus system (see system manual)
Cable cross-sections up to 4 mm^2: Use wire end ferrules for flexible cables
Cable cross-sections > 4 mm^2: Use pin-end connectors

5.4.4 Mains connection: Fuses and cable cross-sections

Installation in accordance with EN 60204-1

Supply conditions	
Range	Description
Fuses	● Utilisation category: only gG/gL or gRL
Cables	Laying systems B2 and C: Use of PVC-insulated copper cables, conductor temperature < 70 °C, ambient temperature < 40 °C, no bundling of the cables or cores, three loaded cores. The data are recommendations. Other dimensionings/laying systems are possible (e.g. in accordance with VDE 0298-4).
RCCB	● Controllers can cause a DC current in the PE conductor. If a residual current device (RCD) or a fault current monitoring unit (RCM) is used for protection in the case of direct or indirect contact, only one RCD/RCM of the following type can be used on the current supply side: – Type B (universal-current sensitive) for connection to a three-phase system – Type A (pulse-current sensitive) or type B (universal-current sensitive) for connection to a 1-phase system Alternatively another protective measure can be used, like for instance isolation from the environment by means of double or reinforced insulation, or isolation from the supply system by using a transformer. ● Earth-leakage circuit breakers must only be installed between mains supply and controller.
Observe all national and regional regulations!	

9300	**Rated fuse current**		**Cable cross-section**		**FI** [1]
	Fuse	Circuit-breaker	Laying system L1, L2, L3, PE		
			B2	C	
Type	[A]	[A]	[mm²]	[mm²]	[mA]
Operation without mains choke/mains filter					
EVS9321-xP	6	C6, B6 [2]	1	1	300
EVS9322-xP	6	C6, B6 [2]	1	1	
EVS9323-xP	10	B10	1.5	1	
EVS9325-xP	25	B20	4	2.5	
Operation with mains choke/mains filter					
EVS9321-xP	6	C6, B6 [2]	1	1	300
EVS9322-xP	6	C6, B6 [2]	1	1	
EVS9323-xP	10	B10	1.5	1	
EVS9324-xP	10	B10	1.5	1	
EVS9325-xP	20	B16	2.5	2.5	
EVS9326-xP	32	B25	–	4	

[1] Universal current-sensitive earth-leakage circuit breaker
[2] For short-time mains interruptions, use circuit breakers with tripping characteristic ”C”

Installation to UL

Supply conditions	
Range	Description
Fuses	● Only in accordance with UL 248 ● System short-circuit current up to 5000 A_{rms} : All classes are permissible ● System short-circuit current up to 50000 A_{rms} : Only classes ”CC”, ”J”, ”T” or ”R” permissible
Cables	● Only in accordance with UL ● The cable cross-sections specified in the following apply under the following conditions: – Conductor temperature < 60 °C – Ambient temperature < 40 °C
Observe all national and regional regulations!	

9300	Rated fuse current	Cable cross-section
	Fuse	L1, L2, L3, PE
Type	[A]	[AWG]
Operation without mains choke/mains filter		
EVS9321-xP	6	18
EVS9322-xP	6	18
EVS9323-xP	10	16
EVS9325-xP	25	10
Operation with mains choke/mains filter		
EVS9321-xP	6	18
EVS9322-xP	6	18
EVS9323-xP	10	16
EVS9324-xP	10	16
EVS9325-xP	25	10
EVS9326-xP	25	10

Max. connection cross-section of the terminal strip: AWG 12, with pin-end connector AWG 10

5.4.5 Mains choke/mains filter assignment

9300	Mains choke	Interference voltage category according to EN 61800-3 and motor cable length			
		Component		Component	
Type		C2	max. [m]	C1	max. [m]
EVS9321-xP	EZN3A2400H002	EZN3A2400H002	5	EZN3B2400H002	50
EVS9322-xP	EZN3A1500H003	EZN3A1500H003	5	EZN3B1500H003	50
EVS9323-xP	EZN3A0900H004	EZN3A0900H004	5	EZN3B0900H004	50
EVS9324-xP	EZN3A0500H007	EZN3A0500H007	5	EZN3B0500H007	50
EVS9325-xP	EZN3A0300H013	EZN3A0300H013	5	EZN3B0300H013	50
EVS9326-xP	ELN3-0150H024-001	EZN3A0150H024	5	EZN3B0150H024	50

5.4.6 Motor connection

Note!

- ► Fusing the motor cable is not required.
- ► The drive controller features 2 connections for motor temperature monitoring:
  - – Terminals T1, T2 for connecting a PTC thermistor or thermal contact (NC contact).
  - – Pins X8/5 and X8/8 of the incremental encoder input (X8) for connecting a KTY thermal sensor.

Shield sheet installation

Stop!

- ► To avoid damaging the PE stud, always install the shield sheet and the PE connection in the order displayed. The required parts are included in the accessory kit.
- ► Do not use lugs as strain relief.

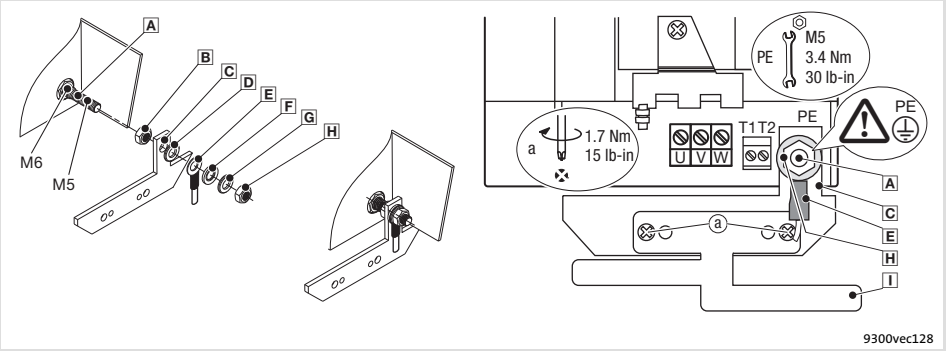

Fig. 5.4-4 Installation of shield sheet for drive controllers 0.37 ... 11 kW

- A PE stud
- B Screw on M5 nut and tighten hand-tight
- C Slide on fixing bracket for shield sheet
- D Slide on serrated lock washer
- E Slide on PE cable with ring cable lug
- F Slide on washer
- G Slide on spring washer
- H Screw on M5 nut and tighten it
- I Screw shield sheet on fixing bracket with two M4 screws (a)

Motor with PTC thermistor or thermal contact (NC contact)

Wire T1, T2 only if the motor is equipped with a PTC thermistor or thermal contact (NC contact).

► An ”open” cable acts like an antenna and can cause faults on the drive controller.

Danger!

► All control terminals only have basic insulation (single isolating distance) after connecting a PTC thermistor or a thermal contact.

► Protection against accidental contact in case of a defective isolating distance is only guaranteed through external measures, e.g. double insulation.

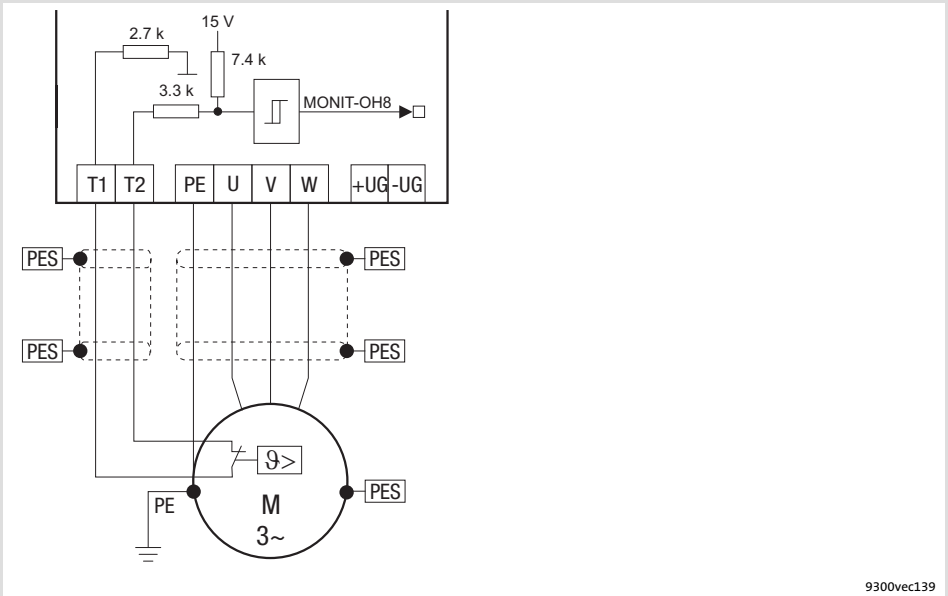

Fig. 5.4-5 Circuit diagram of motor connection with PTC thermistor or thermal contact (NC contact) at T1, T2

Characteristics of the connection for motor temperature monitoring:

Terminals T1, T2	
Connection	● PTC thermistor – PTC thermistor with defined tripping temperature (acc. to DIN 44081 and DIN 44082) ● Thermal contact (NC contact) – Thermostat as NC contact
Tripping point	● Fixed (depending on the PTC/thermal contact) ● PTC: $R\vartheta > 1600\ \Omega$ ● Configurable as warning or error (TRIP)
Notes	● Monitoring is not active in the Lenze setting. ● If you do not use a Lenze motor, we recommend the use of a PTC thermistor up to 150°C.

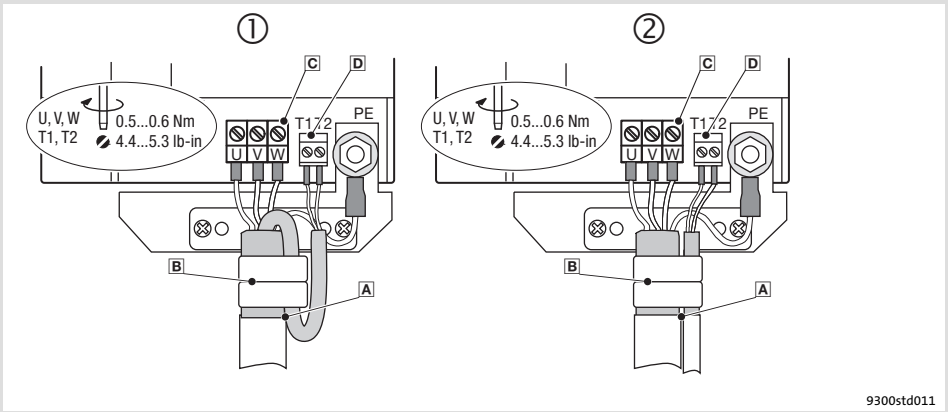

Fig. 5.4-6 Motor connection with PTC thermistor or thermal contact (NC contact)

① A Motor connection with Lenze system cable with integrated control cable for the motor temperature monitoring

B Shield sheet
Clamp entire shield **and** shield of the control cable for the motor temperature monitoring with the straps. If required, fix by means of cable tie.

② A Motor cable connection and separate control cable for the motor temperature monitoring

B Shield sheet
Clamp shield of the motor cable **and** shield of the cable for the motor temperature monitoring with the straps. If required, fix by means of cable tie.

C U, V, W
Motor cable connection
Check the correct polarity. Observe maximum length of the motor cable. Use wire end ferrules for flexible cables.
Max. connectable cable cross-section: 4 mm^2, with pin-end connector > 4 mm^2

D T1, T2 for motor temperature monitoring
Cable connection for PTC thermistors or thermal contacts (NC contacts)

Motor with KTY thermal sensor

Note!

- ► We recommend to use Lenze system cables for wiring.
- ► For self-made cables only use cables with shielded cores twisted in pairs.

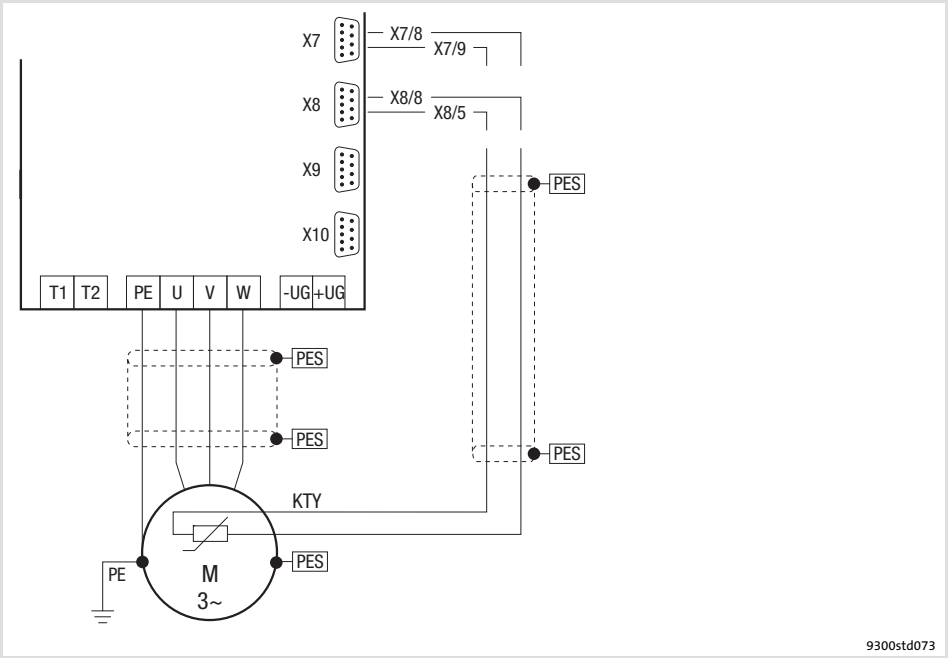

Fig. 5.4-7 Circuit diagram for the motor connection with KTY temperature sensor at X7 or X8

Features of the connection for motor temperature monitoring:

Pins X7/8, X7/9 of resolver input (X7), or pins X8/8, X8/5 of incremental encoder input (X8)	
Connection	Linear KTY temperature sensor
Tripping point	• Warning: adjustable • Error (TRIP): fixed at 150 °C
Notes	• Monitoring is not active in the Lenze setting. • The KTY temperature sensor is monitored with regard to interruption and short circuit.

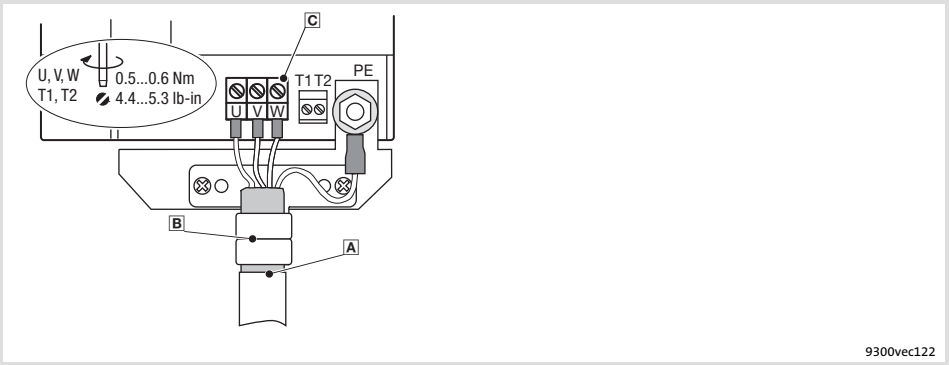

Fig. 5.4-8 Motor connection with KTY thermal sensor

A Motor cable

B Shield sheet
Clamp the motor cable shield with the straps. If required, fix by means of cable tie.

C U, V, W
Motor cable connection
Check the correct polarity. Observe maximum length of the motor cable. Use wire end ferrules for flexible cables.
Max. connectable cable cross-section: 4 mm^2, with pin-end connector > 4 mm^2

5.5 Standard devices in the power range 15 ... 30 kW

5.5.1 Wiring according to EMC (CE-typical drive system)

The drives comply with the EC Directive on ”Electromagnetic Compatibility” if they are installed in accordance with the specifications for the CE-typical drive system. The user is responsible for the compliance of the machine application with the EC Directive.

Note!

Observe the notes given in the chapter ”Basics for wiring according to EMC”!

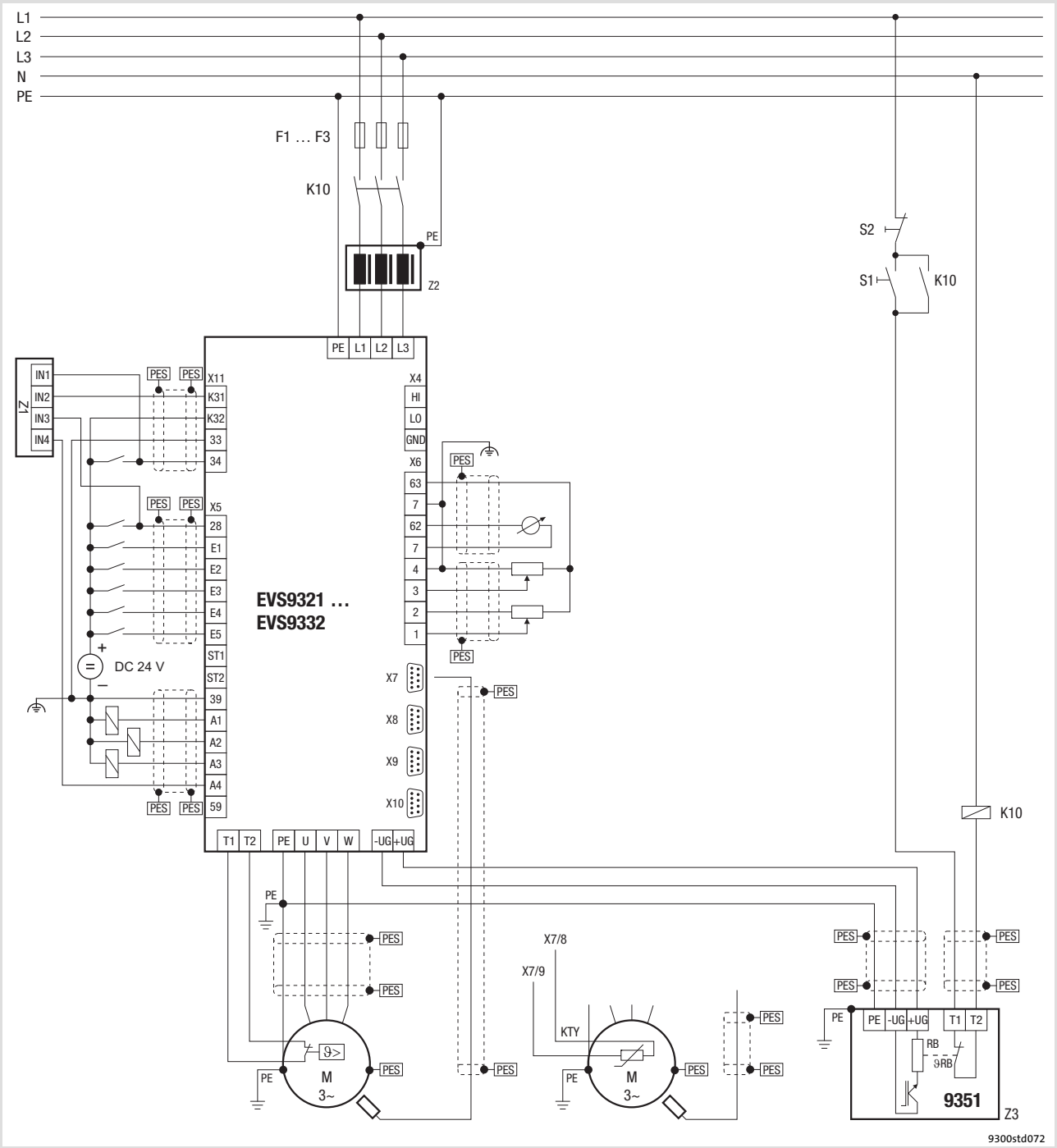

Fig. 5.5-1 Example for wiring in accordance with EMC regulations

F1 ... F3	Fuses
K10	Mains contactor
Z1	Programmable logic controller (PLC)
Z2	Mains choke or mains filter
Z3	EMB9351-E brake module
S1	Mains contactor on
S2	Mains contactor off
$+U_G$, $-U_G$	DC-bus connection
PES	HF shield termination through large-surface connection to PE

5.5.2 Important notes

To gain access to the power connections, remove the cover:

Remove the cover of the drive controller	
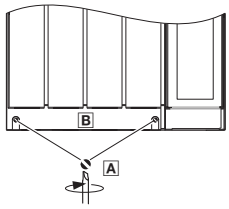	1. Remove the screws A 2. Lift cover B up and detach it

Installation material required from the scope of supply:

Description	Use	Quantity
Hexagon nut M6 (DIN 934)	Connection of supply cables (mains, $+U_G$, $-U_G$) and motor cable to the stud bolts	10
Washer ∅ 6 mm (DIN 125)	For hexagon nut M6	10
Spring washer ∅ 6 mm (DIN 127)	For hexagon nut M6	10
Grommet	Motor cable	1
Shield connection support	Support of the shield sheet for motor cable	1
Self-tapping screw ∅ 4 × 14 mm	Fastening of shield connection support	2
Shield sheet	Shield connection for motor cable	1

5.5.3 Mains connection, DC supply

Note!

- ► If a mains filter or RFI filter is used and the cable length between mains/RFI filter and drive controller exceeds 300 mm, install a shielded cable.
- ► For DC-bus operation or DC supply, we recommend using shielded DC cables.

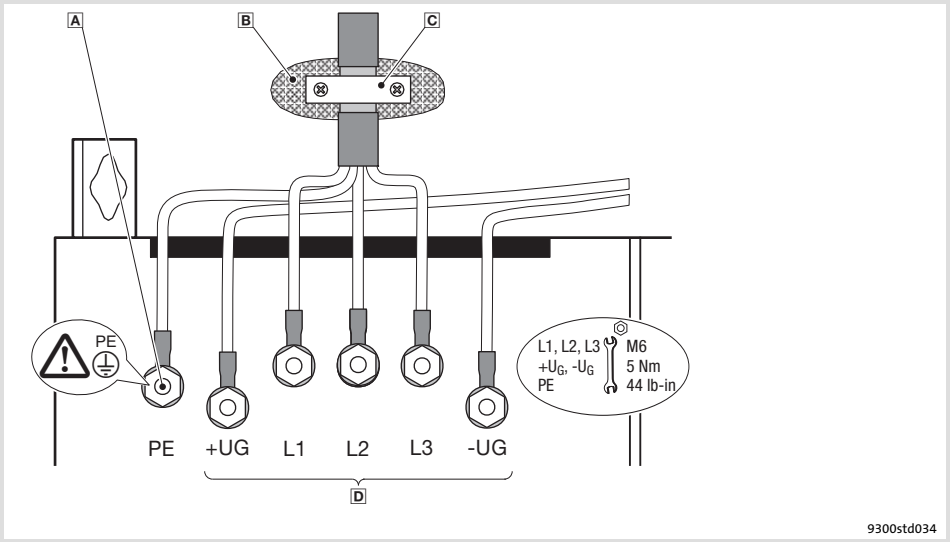

Fig. 5.5-2 Mains connection, DC supply for drive controllers 15 ... 30 kW

A PE stud
Connect PE cable with ring cable lug

B Conductive surface

C Shield clamp
Place shield with large surface on control cabinet mounting plate and fasten with shield clamp (shield clamp is not part of the scope of supply)
To improve the shield connection, also place the shield on the PE stud

D Mains and DC bus connection
L1, L2, L3: Connection of mains cable with ring cable lugs
$+U_G$, $-U_G$: Connection of DC-bus components or connection of the controller in the DC-bus system (see system manual)

5.5.4 Mains connection: Fuses and cable cross-sections

Installation in accordance with EN 60204-1

Supply conditions	
Range	Description
Fuses	● Utilisation category: only gG/gL or gRL
Cables	Laying systems B2 and C: Use of PVC-insulated copper cables, conductor temperature < 70 °C, ambient temperature < 40 °C, no bundling of the cables or cores, three loaded cores. The data are recommendations. Other dimensionings/laying systems are possible (e.g. in accordance with VDE 0298-4).
RCCB	● Controllers can cause a DC current in the PE conductor. If a residual current device (RCD) or a fault current monitoring unit (RCM) is used for protection in the case of direct or indirect contact, only one RCD/RCM of the following type can be used on the current supply side: – Type B (universal-current sensitive) for connection to a three-phase system – Type A (pulse-current sensitive) or type B (universal-current sensitive) for connection to a 1-phase system Alternatively another protective measure can be used, like for instance isolation from the environment by means of double or reinforced insulation, or isolation from the supply system by using a transformer. ● Earth-leakage circuit breakers must only be installed between mains supply and controller.
Observe all national and regional regulations!	

9300	**Rated fuse current**		**Cable cross-section**		**FI** [1]
	Fuse	Circuit-breaker	Laying system L1, L2, L3, PE		
			B2	C	
Type	[A]	[A]	[mm²]	[mm²]	[mA]
Operation without mains choke/mains filter					
EVS9327-xP	63	–	16	16	300
Operation with mains choke/mains filter					
EVS9327-xP	40	–	10	10	300
EVS9328-xP	63	–	25	16	
EVS9329-xP	80	–	–	25	

[1] Universal current-sensitive earth-leakage circuit breaker

Installation to UL

Supply conditions	
Range	Description
Fuses	● Only according to UL 248 ● Mains short-circuit current up to 5000 A_{rms}: All classes permissible ● Mains short-circuit current up to 50000 A_{rms}: Only classes ”J”, ”T” or ”R” permissible
Cables	● Only in accordance with UL ● The cable cross-sections specified in the following apply under the following conditions: – Conductor temperature < 60 °C – Ambient temperature < 40 °C
Observe all national and regional regulations!	

9300	Rated fuse current	Cable cross-section
	Fuse	L1, L2, L3, PE
Type	[A]	[AWG]
Operation with mains choke/mains filter		
EVS9327-xP	35	8
EVS9328-xP	60	4
EVS9329-xP	80	4

5.5.5 Mains choke/mains filter assignment

9300	Mains choke	Interference voltage category according to EN 61800-3 and motor cable length			
		Component		Component	
Type		C2	max. [m]	C1	max. [m]
EVS9327-xP	ELN3-0088H035-001	EZN3A0110H030	25	E82ZN22334B230	10
				E82ZZ15334B230 [1]	10
		E82ZN22334B230	50	EZN3B0110H030U [2]	50
		E82ZZ15334B230 [1]	50		
EVS9328-xP	ELN3-0075H045	EZN3A0080H042	25	E82ZN22334B230	10
		E82ZN22334B230	50	EZN3B0080H042	50
EVS9329-xP	ELN3-0055H055	EZN3A0055H060	25	E82ZN30334B230	10
		E82ZN30334B230	50	EZN3B0055H060	50

[1] RFI filter
[2] Footprint filter

5.5.6 Motor connection

Note!

- ► Fusing the motor cable is not required.
- ► The drive controller features 2 connections for motor temperature monitoring:
  - – Terminals T1, T2 for connecting a PTC thermistor or thermal contact (NC contact).
  - – Pins X8/5 and X8/8 of the incremental encoder input (X8) for connecting a KTY thermal sensor.

Shield sheet installation

Stop!

Do not use lugs as strain relief.

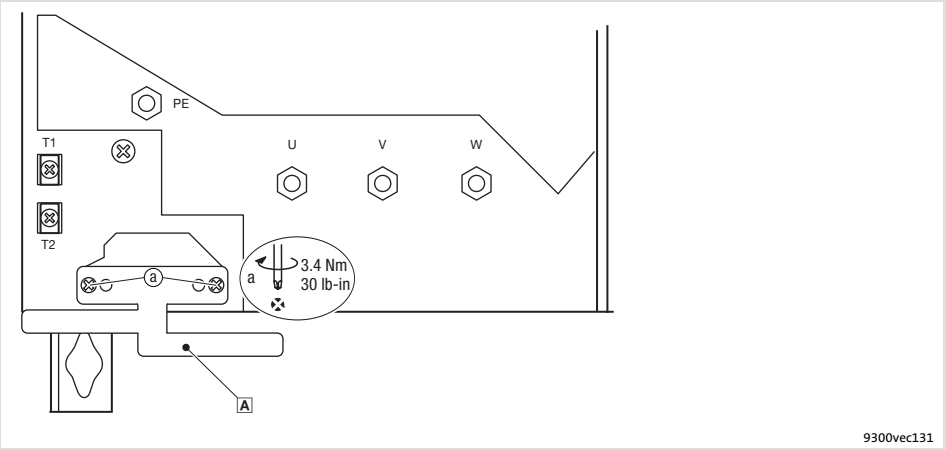

Fig. 5.5-3 Installation of shield sheet for drive controllers 15 ... 30 kW

A Fasten the shield sheet with two self-tapping screws ∅ 4 × 14 mm (a)

Motor with PTC thermistor or thermal contact (NC contact)

Wire T1, T2 only if the motor is equipped with a PTC thermistor or thermal contact (NC contact).

► An ”open” cable acts like an antenna and can cause faults on the drive controller.

Danger!

► All control terminals only have basic insulation (single isolating distance) after connecting a PTC thermistor or a thermal contact.

► Protection against accidental contact in case of a defective isolating distance is only guaranteed through external measures, e.g. double insulation.

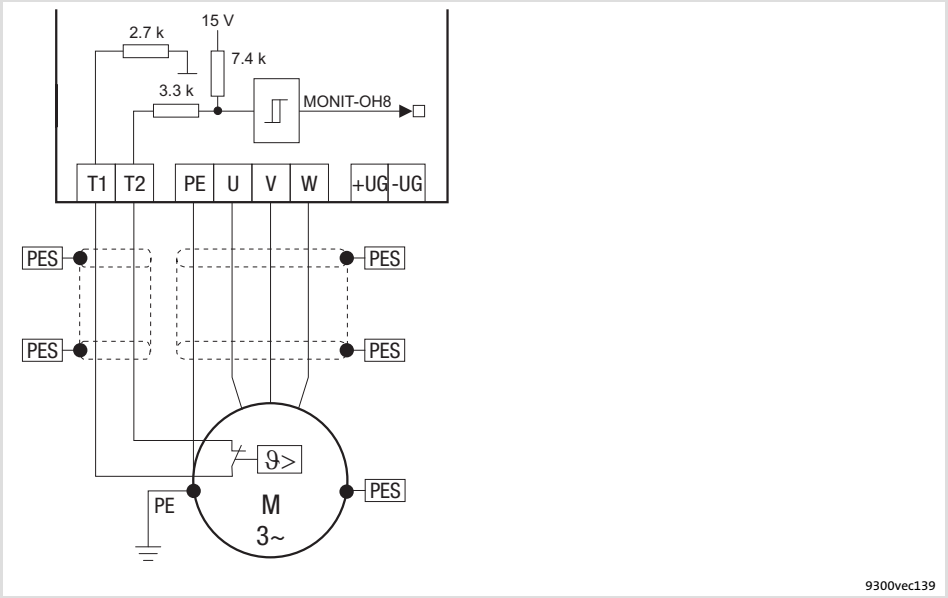

Fig. 5.5-4 Circuit diagram of motor connection with PTC thermistor or thermal contact (NC contact) at T1, T2

Characteristics of the connection for motor temperature monitoring:

Terminals T1, T2	
Connection	● PTC thermistor – PTC thermistor with defined tripping temperature (acc. to DIN 44081 and DIN 44082) ● Thermal contact (NC contact) – Thermostat as NC contact
Tripping point	● Fixed (depending on the PTC/thermal contact) ● PTC: $R\vartheta > 1600\ \Omega$ ● Configurable as warning or error (TRIP)
Notes	● Monitoring is not active in the Lenze setting. ● If you do not use a Lenze motor, we recommend the use of a PTC thermistor up to 150°C.

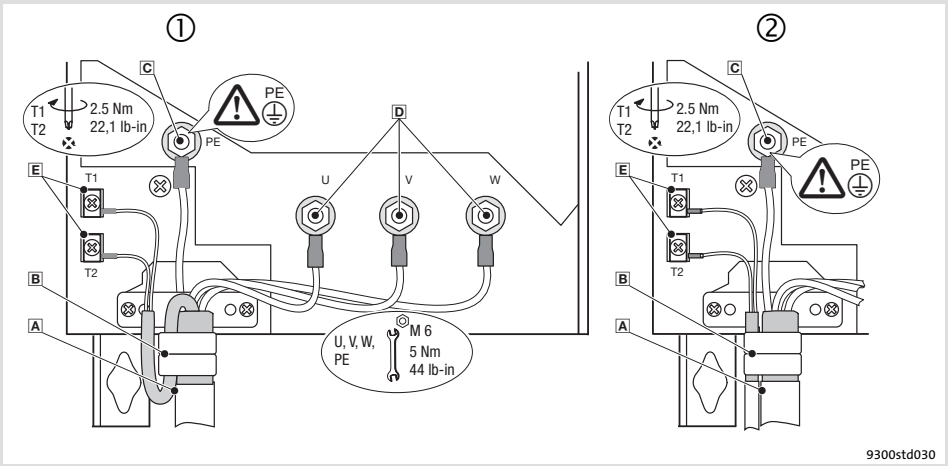

Fig. 5.5-5 Motor connection with PTC thermistor or thermal contact (NC contact)

① A Motor connection with Lenze system cable with integrated control cable for the motor temperature monitoring

B Shield sheet
Clamp entire shield **and** shield of the control cable for the motor temperature monitoring with the straps. If required, fix by means of cable tie.

② A Motor cable connection and separate control cable for the motor temperature monitoring

B Shield sheet
Clamp shield of the motor cable **and** shield of the cable for the motor temperature monitoring with the straps. If required, fix by means of cable tie.

C PE stud
PE cable connection with ring cable lug

D U, V, W
Motor cable connection
Check the correct polarity. Observe maximum length of the motor cable.
Max. connectable cable cross-section: 50 mm^2 with ring cable lug

E T1, T2 for motor temperature monitoring
Cable connection for PTC thermistors or thermal contacts (NC contacts)

Motor with KTY thermal sensor

Note!

- ► We recommend to use Lenze system cables for wiring.
- ► For self-made cables only use cables with shielded cores twisted in pairs.

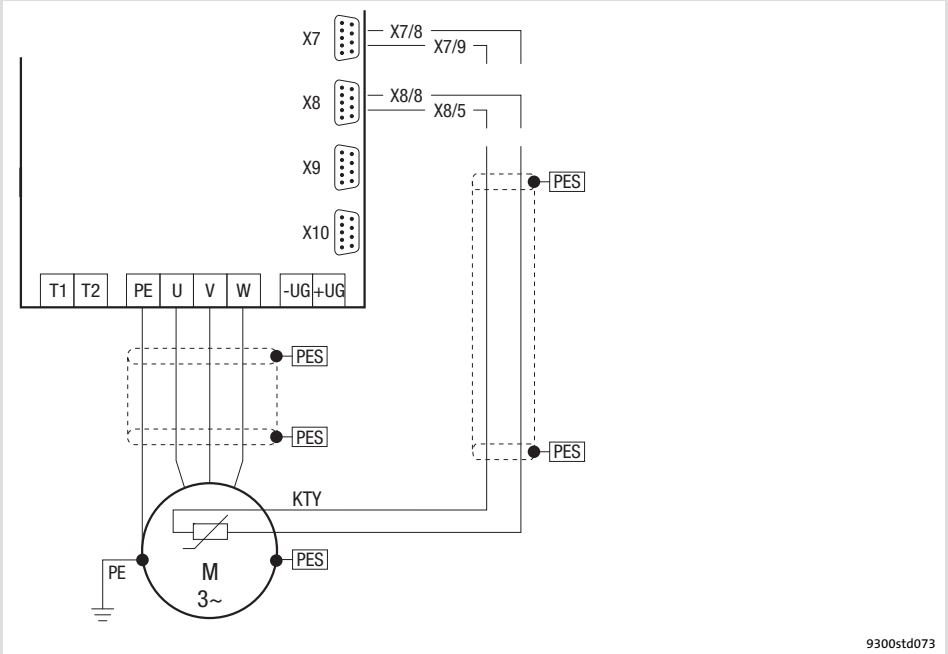

Fig. 5.5-6 Circuit diagram for the motor connection with KTY temperature sensor at X7 or X8

Features of the connection for motor temperature monitoring:

Pins X7/8, X7/9 of resolver input (X7), or pins X8/8, X8/5 of incremental encoder input (X8)	
Connection	Linear KTY temperature sensor
Tripping point	• Warning: adjustable • Error (TRIP): fixed at 150 °C
Notes	• Monitoring is not active in the Lenze setting. • The KTY temperature sensor is monitored with regard to interruption and short circuit.

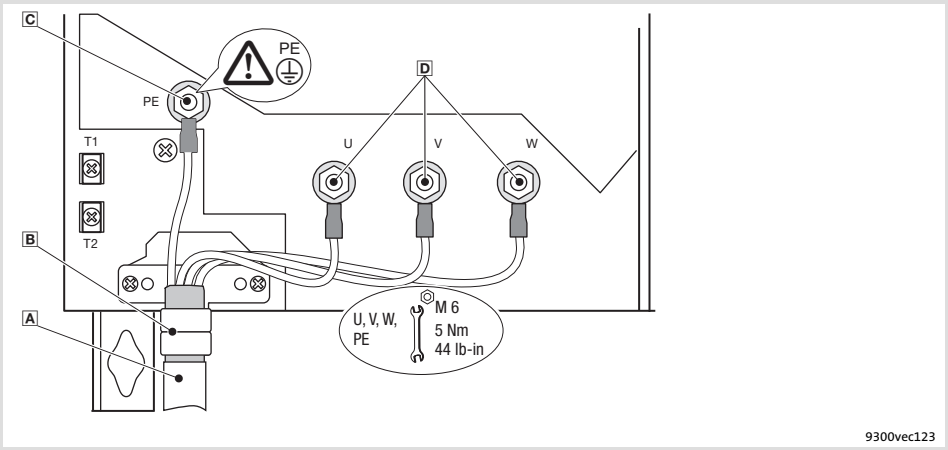

Fig. 5.5-7 Motor connection with KTY thermal sensor

- A Motor cable
- B Shield connection
  Clamp the motor cable shield with the straps. If required, fix by means of cable tie.
- C PE stud
  PE cable connection with ring cable lug
- D U, V, W
  Motor cable connection
  Check the correct polarity. Observe maximum length of the motor cable.
  Max. connectable cable cross-section: 50 mm^2 with ring cable lug

5.6 Standard devices with a power of 45 kW

5.6.1 Wiring according to EMC (CE-typical drive system)

The drives comply with the EC Directive on ”Electromagnetic Compatibility” if they are installed in accordance with the specifications for the CE-typical drive system. The user is responsible for the compliance of the machine application with the EC Directive.

Note!

Observe the notes given in the chapter ”Basics for wiring according to EMC”!

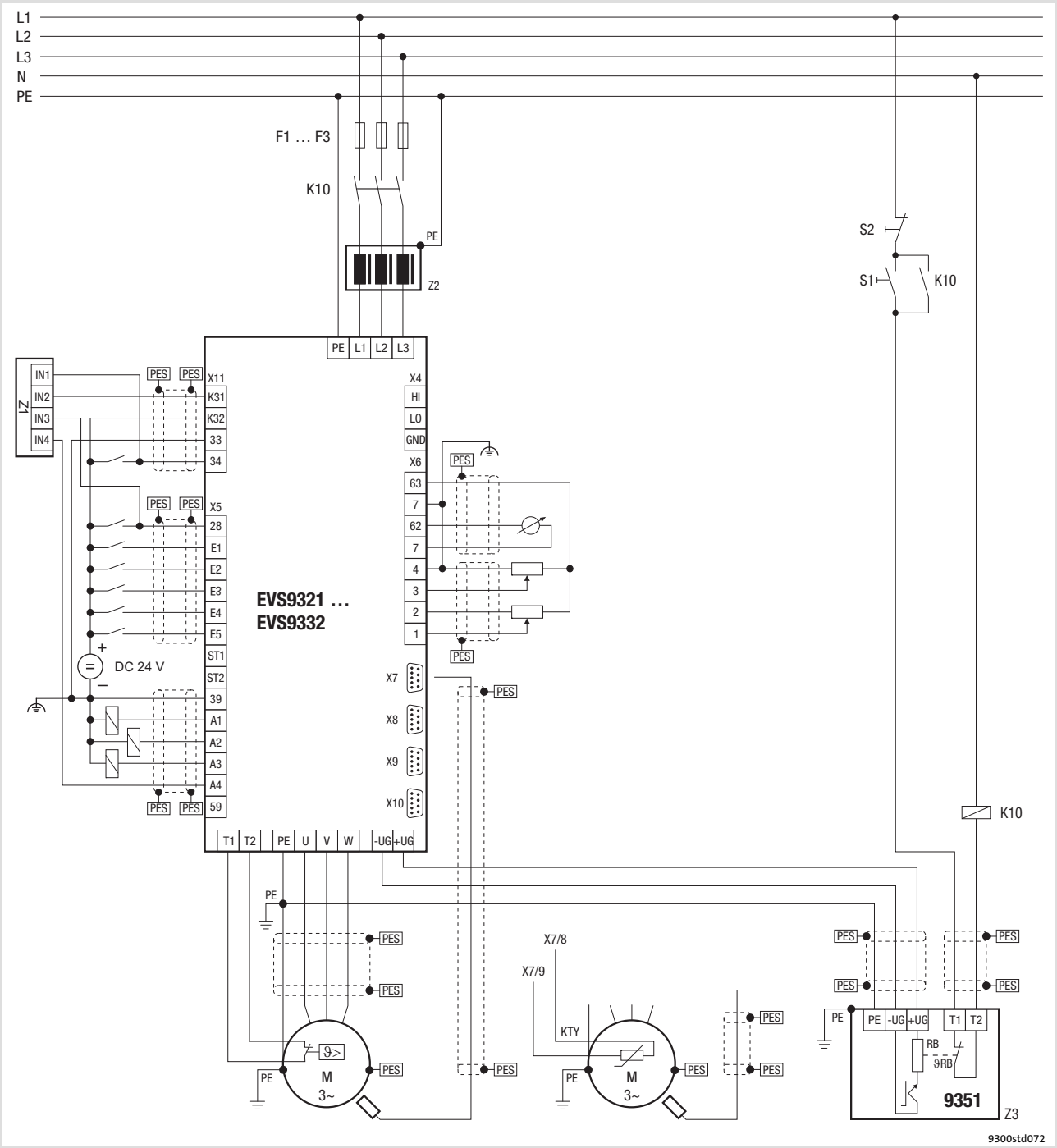

Fig. 5.6-1 Example for wiring in accordance with EMC regulations

F1 ... F3	Fuses
K10	Mains contactor
Z1	Programmable logic controller (PLC)
Z2	Mains choke or mains filter
Z3	EMB9351-E brake module
S1	Mains contactor on
S2	Mains contactor off
$+U_G$, $-U_G$	DC-bus connection
PES	HF shield termination through large-surface connection to PE

5.6.2 Important notes

To gain access to the power connections, remove the cover:

Remove the cover of the drive controller	
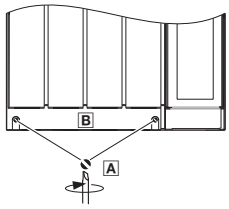	1. Remove the screws A 2. Lift cover B up and detach it

Installation material required from the scope of supply:

Description	Use	Quantity
Cable ties 3.5 × 150 mm	Strain relief/shield connection for motor cable	4

5.6.3 Mains connection, DC supply

Note!

- ► If a mains filter or RFI filter is used and the cable length between mains/RFI filter and drive controller exceeds 300 mm, install a shielded cable.
- ► For DC-bus operation or DC supply, we recommend using shielded DC cables.

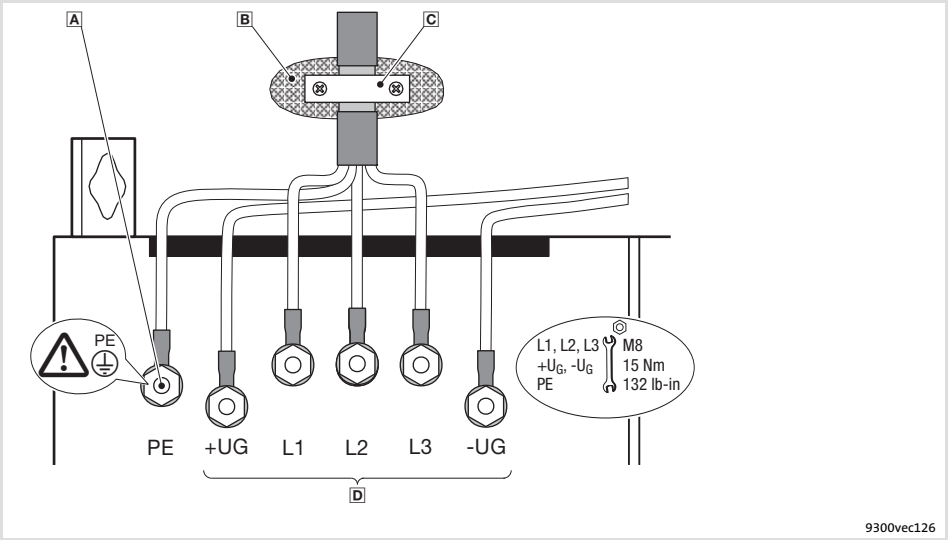

Fig. 5.6-2 Mains connection, DC supply for 45 kW controller

A PE stud
Connect PE cable with ring cable lug

B Conductive surface

C Shield clamp
Place shield with large surface on control cabinet mounting plate and fasten with shield clamp (shield clamp is not part of the scope of supply)
To improve the shield connection, also place the shield on the PE stud

D Mains and DC bus connection
L1, L2, L3: Connection of mains cable with ring cable lugs
$+U_G$, $-U_G$: Connection of DC-bus components or connection of the controller in the DC-bus system (see system manual)

5.6.4 Mains connection: Fuses and cable cross-sections

Installation in accordance with EN 60204-1

Supply conditions	
Range	Description
Fuses	● Utilisation category: only gG/gL or gRL
Cables	Laying systems B2 and C: Use of PVC-insulated copper cables, conductor temperature < 70 °C, ambient temperature < 40 °C, no bundling of the cables or cores, three loaded cores. The data are recommendations. Other dimensionings/laying systems are possible (e.g. in accordance with VDE 0298-4).
RCCB	● Controllers can cause a DC current in the PE conductor. If a residual current device (RCD) or a fault current monitoring unit (RCM) is used for protection in the case of direct or indirect contact, only one RCD/RCM of the following type can be used on the current supply side: – Type B (universal-current sensitive) for connection to a three-phase system – Type A (pulse-current sensitive) or type B (universal-current sensitive) for connection to a 1-phase system Alternatively another protective measure can be used, like for instance isolation from the environment by means of double or reinforced insulation, or isolation from the supply system by using a transformer. ● Earth-leakage circuit breakers must only be installed between mains supply and controller.
Observe all national and regional regulations!	

9300	Rated fuse current		Cable cross-section		FI [1]
	Fuse	Circuit-breaker	Laying system L1, L2, L3, PE		
			B2	C	
Type	[A]	[A]	[mm²]	[mm²]	[mA]
Operation with mains choke/mains filter					
EVS9330-xP	100	–	–	35	300

[1] Universal current-sensitive earth-leakage circuit breaker

Installation to UL

Supply conditions	
Range	Description
Fuses	● Only according to UL 248 ● Mains short-circuit current up to 10000 A_{rms}: All classes permissible ● Mains short-circuit current up to 50000 A_{rms}: Only classes ”J”, ”T” or ”R” permissible
Cables	● Only in accordance with UL ● The cable cross-sections specified in the following apply under the following conditions: – Conductor temperature < 60 °C – Ambient temperature < 40 °C
Observe all national and regional regulations!	

9300	Rated fuse current	Cable cross-section
	Fuse	L1, L2, L3, PE
Type	[A]	[AWG]
Operation with mains choke/mains filter		
EVS9330-xP	100	1

5.6.5 Mains choke/mains filter assignment

9300	Mains choke	Interference voltage category according to EN 61800-3 and motor cable length			
		Component		Component	
Type		C2	max. [m]	C1	max. [m]
EVS9330-xP	ELN3-0038H085	EZN3A0030H110	25	EZN3B0030H110	50
		EZN3A0030H110N001 [3)]	25		
		E82ZN55334B230	50		

[3)] For controllers with thermal separation

5.6.6 Motor connection

Note!

- ► Fusing the motor cable is not required.
- ► The drive controller features 2 connections for motor temperature monitoring:
  - – Terminals T1, T2 for connecting a PTC thermistor or thermal contact (NC contact).
  - – Pins X8/5 and X8/8 of the incremental encoder input (X8) for connecting a KTY thermal sensor.

Motor with PTC thermistor or thermal contact (NC contact)

Wire T1, T2 only if the motor is equipped with a PTC thermistor or thermal contact (NC contact).

► An ”open” cable acts like an antenna and can cause faults on the drive controller.

Danger!

- ► All control terminals only have basic insulation (single isolating distance) after connecting a PTC thermistor or a thermal contact.
- ► Protection against accidental contact in case of a defective isolating distance is only guaranteed through external measures, e.g. double insulation.

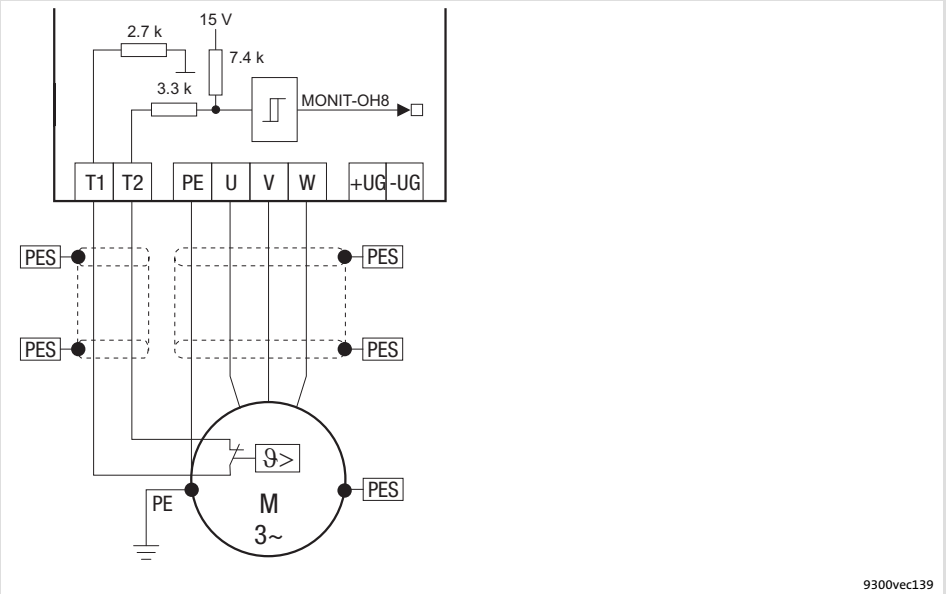

Fig. 5.6-3 Circuit diagram of motor connection with PTC thermistor or thermal contact (NC contact) at T1, T2

Characteristics of the connection for motor temperature monitoring:

Terminals T1, T2	
Connection	● PTC thermistor – PTC thermistor with defined tripping temperature (acc. to DIN 44081 and DIN 44082) ● Thermal contact (NC contact) – Thermostat as NC contact
Tripping point	● Fixed (depending on the PTC/thermal contact) ● PTC: $R\vartheta > 1600\ \Omega$ ● Configurable as warning or error (TRIP)
Notes	● Monitoring is not active in the Lenze setting. ● If you do not use a Lenze motor, we recommend the use of a PTC thermistor up to 150°C.

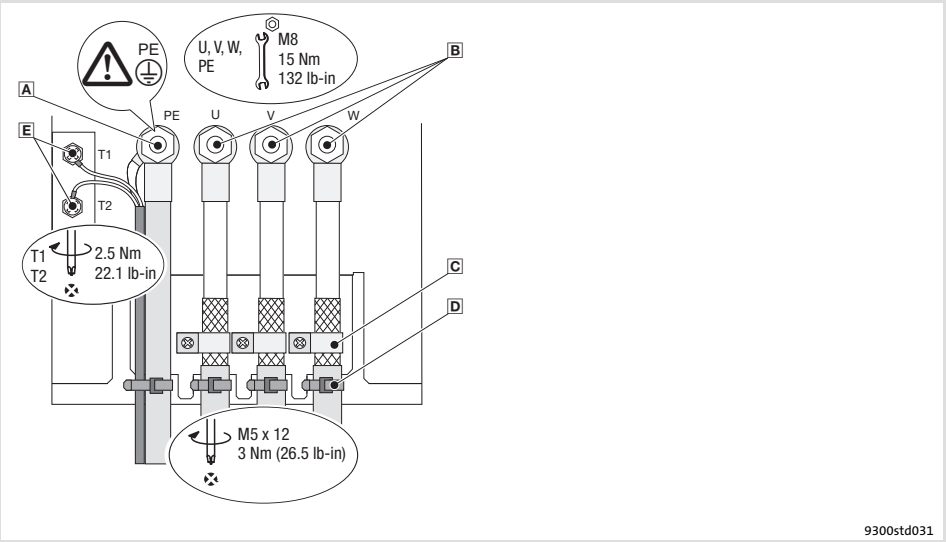

Fig. 5.6-4 Motor connection with PTC thermistor or thermal contact (NC contact)

A PE stud
PE cable connection with ring cable lug

B U, V, W
Motor cable connection
Check the correct polarity. Observe maximum length of the motor cable.
Max. connectable cable cross-section: 120 mm^2 with ring cable lug

C Shield clamps
Place shields of motor cable with large surface on the shield sheet and fasten with shield clamps and M5 × 12 mm screws

D Cable ties
Strain relief of motor cable

E T1, T2 for motor temperature monitoring
Cable connection for PTC thermistors or thermal contacts (NC contacts)
Place shield with large surface on PE stud

Motor with KTY thermal sensor

Note!

- ► We recommend to use Lenze system cables for wiring.
- ► For self-made cables only use cables with shielded cores twisted in pairs.

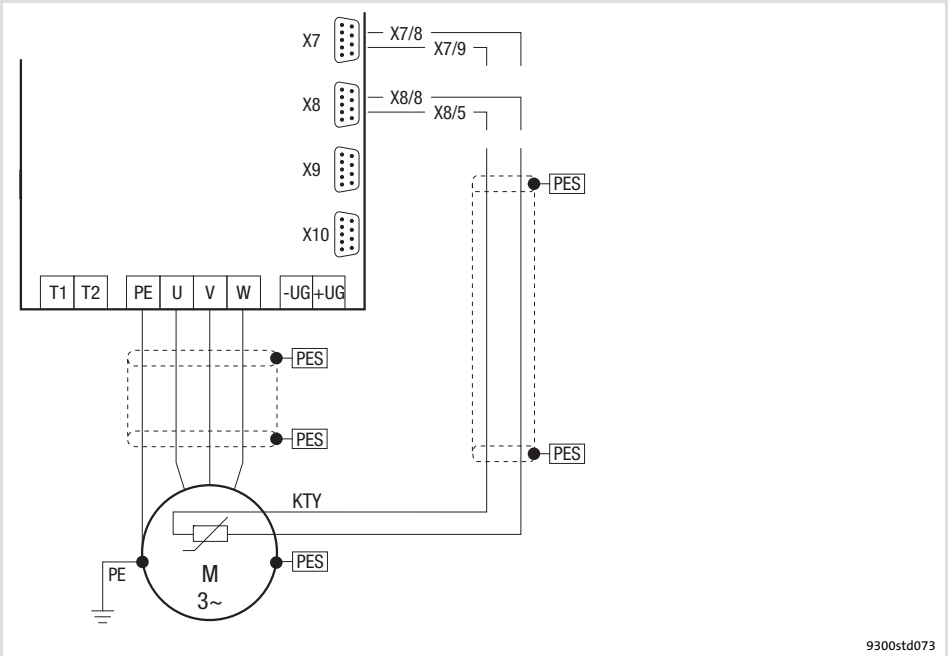

Fig. 5.6-5 Circuit diagram for the motor connection with KTY temperature sensor at X7 or X8

Features of the connection for motor temperature monitoring:

Pins X7/8, X7/9 of resolver input (X7), or pins X8/8, X8/5 of incremental encoder input (X8)	
Connection	Linear KTY temperature sensor
Tripping point	• Warning: adjustable • Error (TRIP): fixed at 150 °C
Notes	• Monitoring is not active in the Lenze setting. • The KTY temperature sensor is monitored with regard to interruption and short circuit.

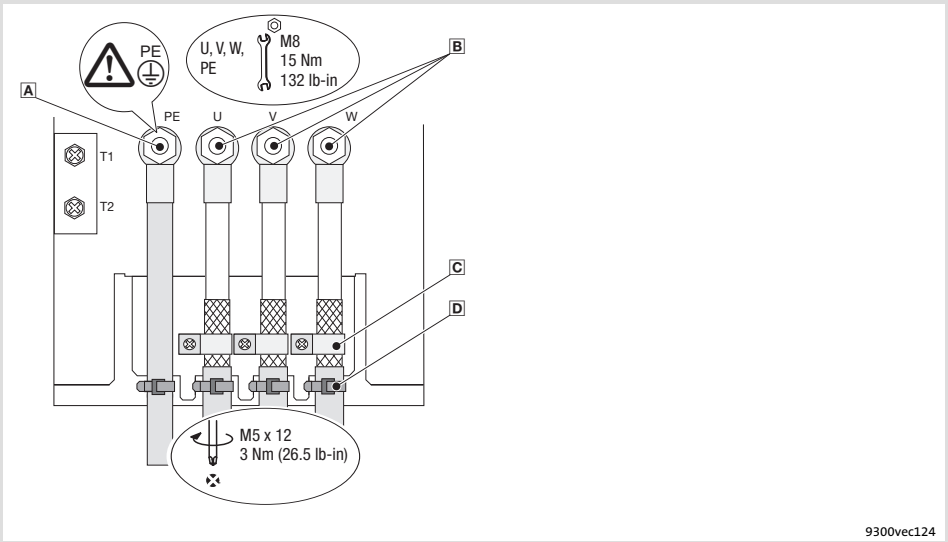

Fig. 5.6-6 Motor connection with KTY thermal sensor

- **A** PE stud
  PE cable connection with ring cable lug
- **B** U, V, W
  Motor cable connection
  Check the correct polarity. Observe maximum length of the motor cable.
  Max. connectable cable cross-section: 120 mm^2 with ring cable lug
- **C** Shield clamps
  Place shields of motor cable with large surface on the shield sheet and fasten with shield clamps and M5 × 12 mm screws
- **D** Cable ties
  Strain relief of motor cable

5.7 Standard devices in the power range 55 ... 75 kW

5.7.1 Wiring according to EMC (CE-typical drive system)

The drives comply with the EC Directive on ”Electromagnetic Compatibility” if they are installed in accordance with the specifications for the CE-typical drive system. The user is responsible for the compliance of the machine application with the EC Directive.

Note!

Observe the notes given in the chapter ”Basics for wiring according to EMC”!

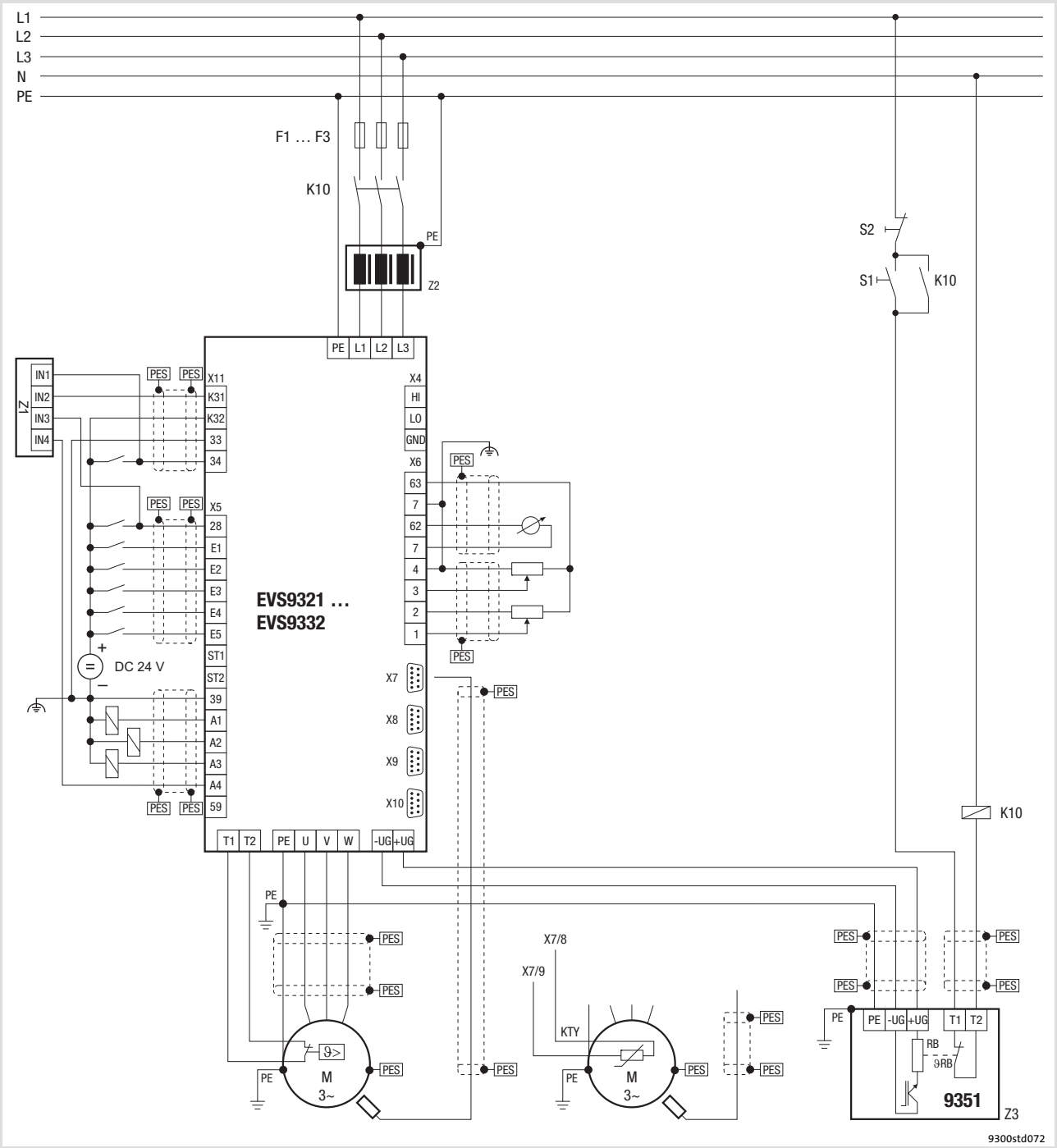

Fig. 5.7-1 Example for wiring in accordance with EMC regulations

F1 ... F3	Fuses
K10	Mains contactor
Z1	Programmable logic controller (PLC)
Z2	Mains choke or mains filter
Z3	EMB9351-E brake module
S1	Mains contactor on
S2	Mains contactor off
$+U_G$, $-U_G$	DC-bus connection
PES	HF shield termination through large-surface connection to PE

5.7.2 Important notes

To gain access to the power connections, remove the cover:

Remove the cover of the drive controller	
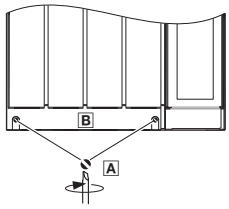	1. Remove the screws A 2. Lift cover B up and detach it

Installation material required from the scope of supply:

Description	Use	Quantity
Cable ties 3.5 × 150 mm	Strain relief/shield connection for motor cable	4

5.7.3 Mains connection, DC supply

Note!

- ► If a mains filter or RFI filter is used and the cable length between mains/RFI filter and drive controller exceeds 300 mm, install a shielded cable.
- ► For DC-bus operation or DC supply, we recommend using shielded DC cables.

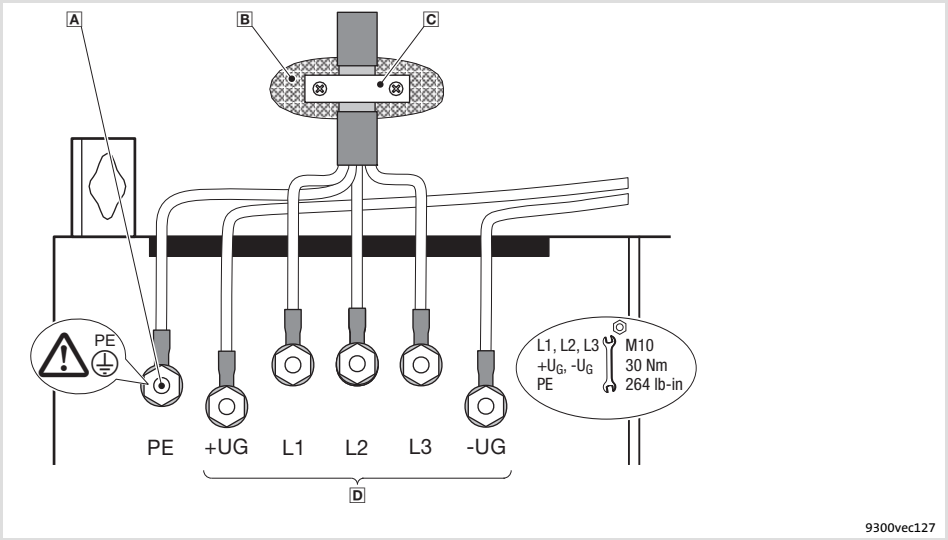

Fig. 5.7-2 Mains connection, DC supply for 55 ... 75 kW drive controller

- A PE stud
  Connect PE cable with ring cable lug
- B Conductive surface
- C Shield clamp
  Place shield with large surface on control cabinet mounting plate and fasten with shield clamp (shield clamp is not part of the scope of supply)
  To improve the shield connection, also place the shield on the PE stud
- D Mains and DC bus connection
  L1, L2, L3: Connection of mains cable with ring cable lugs
  $+U_G$, $-U_G$: Connection of DC-bus components or connection of the controller in the DC-bus system (see system manual)

5.7.4 Mains connection: Fuses and cable cross-sections

Installation in accordance with EN 60204-1

Supply conditions	
Range	Description
Fuses	● Utilisation category: only gG/gL or gRL
Cables	Laying systems B2 and C: Use of PVC-insulated copper cables, conductor temperature < 70 °C, ambient temperature < 40 °C, no bundling of the cables or cores, three loaded cores. The data are recommendations. Other dimensionings/laying systems are possible (e.g. in accordance with VDE 0298-4).
RCCB	● Controllers can cause a DC current in the PE conductor. If a residual current device (RCD) or a fault current monitoring unit (RCM) is used for protection in the case of direct or indirect contact, only one RCD/RCM of the following type can be used on the current supply side: – Type B (universal-current sensitive) for connection to a three-phase system – Type A (pulse-current sensitive) or type B (universal-current sensitive) for connection to a 1-phase system Alternatively another protective measure can be used, like for instance isolation from the environment by means of double or reinforced insulation, or isolation from the supply system by using a transformer. ● Earth-leakage circuit breakers must only be installed between mains supply and controller.
Observe all national and regional regulations!	

9300	Rated fuse current		Cable cross-section		FI [1]
	Fuse	Circuit-breaker	Laying system L1, L2, L3, PE		
			B2	C	
Type	[A]	[A]	[mm²]	[mm²]	[mA]
Operation with mains choke/mains filter					
EVS9331-xP	125	–	–	35	300
EVS9332-xP	160	–	–	70	

[1] Universal current-sensitive earth-leakage circuit breaker

Installation to UL

Supply conditions	
Range	Description
Fuses	● Only according to UL 248 ● Mains short-circuit current up to 10000 A_{rms}: All classes permissible ● Mains short-circuit current up to 50000 A_{rms}: Only classes ”J”, ”T” or ”R” permissible
Cables	● Only in accordance with UL ● The cable cross-sections specified in the following apply under the following conditions: – Conductor temperature < 60 °C – Ambient temperature < 40 °C
Observe all national and regional regulations!	

9300	Rated fuse current	Cable cross-section
	Fuse	L1, L2, L3, PE
Type	[A]	[AWG]
Operation with mains choke/mains filter		
EVS9331-xP	125	1/0
EVS9332-xP	175	2/0

5.7.5 Mains choke/mains filter assignment

9300	Mains choke	Interference voltage category according to EN 61800-3 and motor cable length			
		Component		Component	
Type		C2	max. [m]	C1	max. [m]
EVS9331-xP	ELN3-0027H105	EZN3A0022H150	25	E82ZN75334B230	10
		E82ZN75334B230	50	EZN3B0022H150	50
EVS9332-xP	ELN3-0022H130	EZN3A0022H150	25	E82ZN75334B230	10
		E82ZN75334B230	50	EZN3B0022H150	50

5.7.6 Motor connection

Note!

- ► Fusing the motor cable is not required.
- ► The drive controller features 2 connections for motor temperature monitoring:
  - – Terminals T1, T2 for connecting a PTC thermistor or thermal contact (NC contact).
  - – Pins X8/5 and X8/8 of the incremental encoder input (X8) for connecting a KTY thermal sensor.

Motor with PTC thermistor or thermal contact (NC contact)

Wire T1, T2 only if the motor is equipped with a PTC thermistor or thermal contact (NC contact).

► An ”open” cable acts like an antenna and can cause faults on the drive controller.

Danger!

- ► All control terminals only have basic insulation (single isolating distance) after connecting a PTC thermistor or a thermal contact.
- ► Protection against accidental contact in case of a defective isolating distance is only guaranteed through external measures, e.g. double insulation.

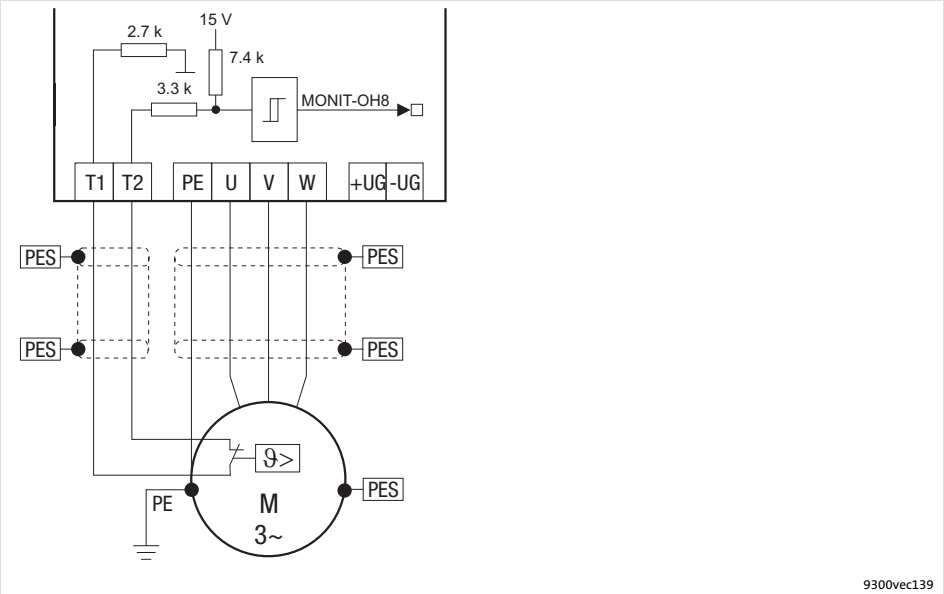

Fig. 5.7-3 Circuit diagram of motor connection with PTC thermistor or thermal contact (NC contact) at T1, T2

Characteristics of the connection for motor temperature monitoring:

Terminals T1, T2	
Connection	● PTC thermistor – PTC thermistor with defined tripping temperature (acc. to DIN 44081 and DIN 44082) ● Thermal contact (NC contact) – Thermostat as NC contact
Tripping point	● Fixed (depending on the PTC/thermal contact) ● PTC: $R\vartheta > 1600\ \Omega$ ● Configurable as warning or error (TRIP)
Notes	● Monitoring is not active in the Lenze setting. ● If you do not use a Lenze motor, we recommend the use of a PTC thermistor up to 150°C.

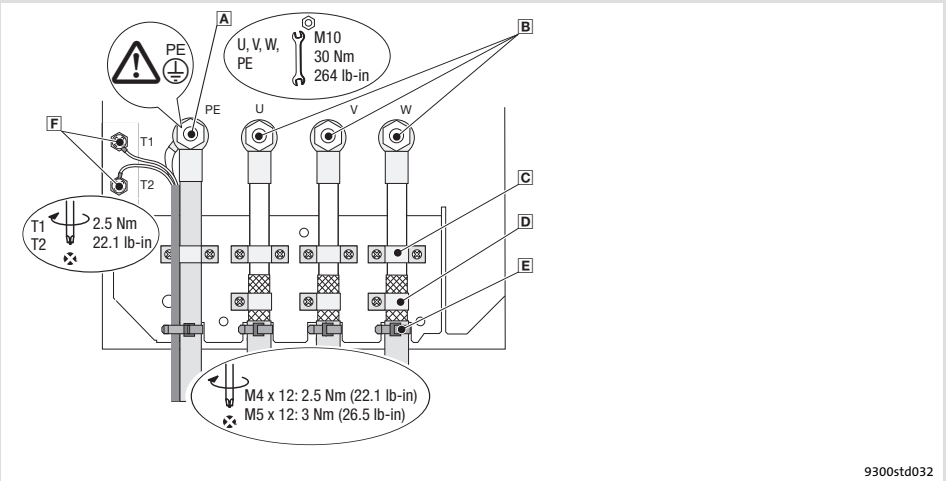

Fig. 5.7-4 Motor connection with PTC thermistor or thermal contact (NC contact)

A PE stud
PE cable connection with ring cable lug

B U, V, W
Motor cable connection
Check the correct polarity. Observe maximum length of the motor cable.
Max. connectable cable cross-section: 240 mm^2 with ring cable lug

C Cable clamps for strain relief of motor cable
Fasten cable clamps with M4 × 12 mm screws

D Shield clamps
Place shields of motor cable with large surface on the shield sheet and fasten with shield clamps and M5 × 12 mm screws

E Cable ties for additional strain relief of motor cable

F T1, T2 for motor temperature monitoring
Cable connection for PTC thermistors or thermal contacts (NC contacts)
Place shield with large surface on PE stud

Motor with KTY thermal sensor

Note!

- ► We recommend to use Lenze system cables for wiring.
- ► For self-made cables only use cables with shielded cores twisted in pairs.

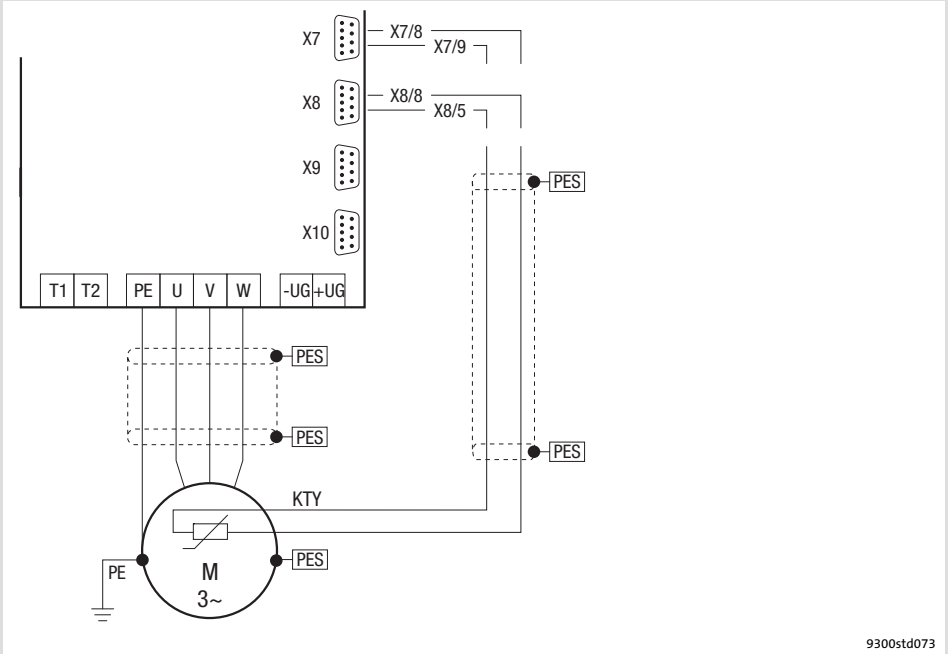

Fig. 5.7-5 Circuit diagram for the motor connection with KTY temperature sensor at X7 or X8

Features of the connection for motor temperature monitoring:

Pins X7/8, X7/9 of resolver input (X7), or pins X8/8, X8/5 of incremental encoder input (X8)	
Connection	Linear KTY temperature sensor
Tripping point	• Warning: adjustable • Error (TRIP): fixed at 150 °C
Notes	• Monitoring is not active in the Lenze setting. • The KTY temperature sensor is monitored with regard to interruption and short circuit.

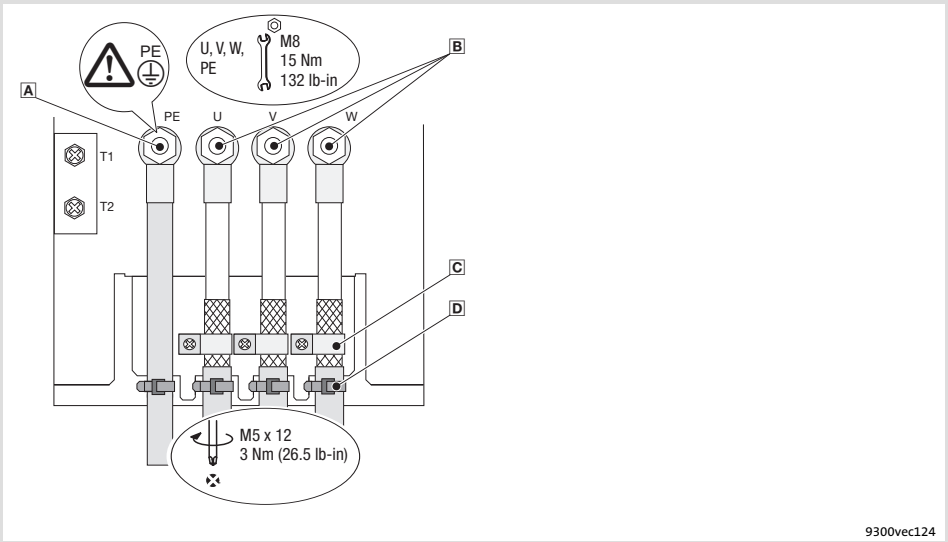

Fig. 5.7-6 Motor connection with KTY thermal sensor

- **A** PE stud
  PE cable connection with ring cable lug
- **B** U, V, W
  Motor cable connection
  Check the correct polarity. Observe maximum length of the motor cable.
  Max. connectable cable cross-section: 240 mm^2 with ring cable lug
- **C** Shield clamps
  Place shields of motor cable with large surface on the shield sheet and fasten with shield clamps and M5 × 12 mm screws
- **D** Cable ties
  Strain relief of motor cable

5.8 Control terminals

5.8.1 Important notes

Stop!

The control card will be damaged if

- ► the voltage between X5/39 and PE or X6/7 and PE is greater than 50 V,
- ► the voltage between voltage source and X6/7 exceeds 10 V (common mode) in case of supply via external voltage source.

Limit the voltage before switching on the drive controller:

- ► Connect X5/39, X6/2, X6/4 and X6/7 directly to PE or
- ► use voltage-limiting components.

► For trouble-free operation, the control cables must be shielded:

- – Connect the shield of digital input and output cables at both ends.
- – Connect the shield of analog input and output cables at one end (at the drive controller).
- – For lengths of 200 mm and more, use only shielded cables for analog and digital inputs and outputs. Under 200 mm, unshielded but twisted cables may be used.

Installation material required from the scope of supply:

Description	Use	Quantity
Shield sheet	Shield connection for control cables	1
Screw M4 × 10 mm (DIN 7985)	Shield sheet fastening	1
Terminal strip, 4-pole (only for variants V004 and V024)	Connection of safety relay K_{SR} at X11	1
Terminal strip, 7-pole	Connection of digital inputs and outputs at X5	2
Terminal strip, 4-pole	Connection of analog inputs and outputs at X6	2

How to connect the shield

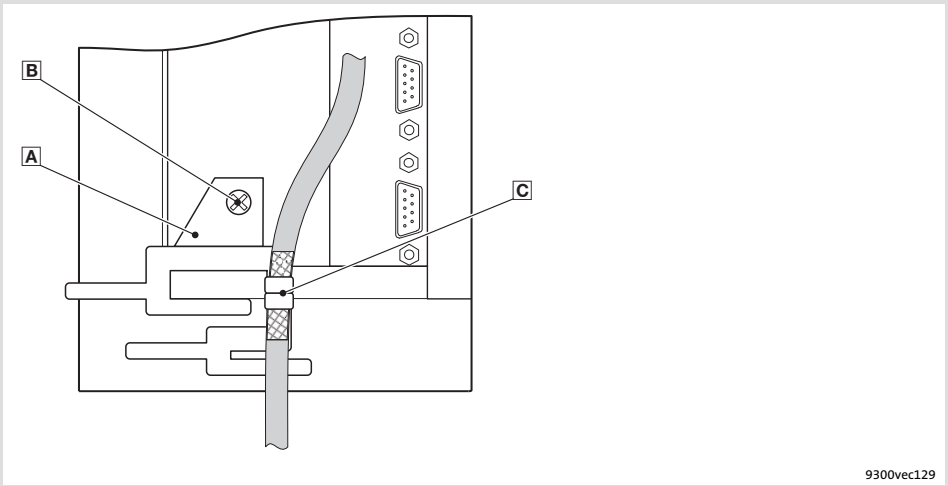

Fig. 5.8-1 Connection of cable shield to shield sheet

- A Shield sheet
- B Fasten shield sheet with M4 × 10 mm screw at the bottom of the control card
- C Securely clamp cable shield with lugs

Terminal data

Stop!

- ► Connect or disconnect the terminal strips only if the controller is disconnected from the mains!
- ► Wire the terminal strips before connecting them!
- ► Unused terminal strips must also be plugged on to protect the contacts.

Cable type		Wire end ferrule	Maximum cable cross-section	Tightening torque	Stripping length
	Rigid	–	2.5 mm² (AWG 14)	0.5 ... 0.6 Nm (4.4 ... 5.3 lb-in)	5 mm
	Flexible	Without wire end ferrule	2.5 mm² (AWG 14)		
	Flexible	Wire end ferrule without plastic sleeve	2.5 mm² (AWG 14)		
	Flexible	Wire end ferrule with plastic sleeve	2.5 mm² (AWG 14)		

5.8.2 Connection terminal of the control card

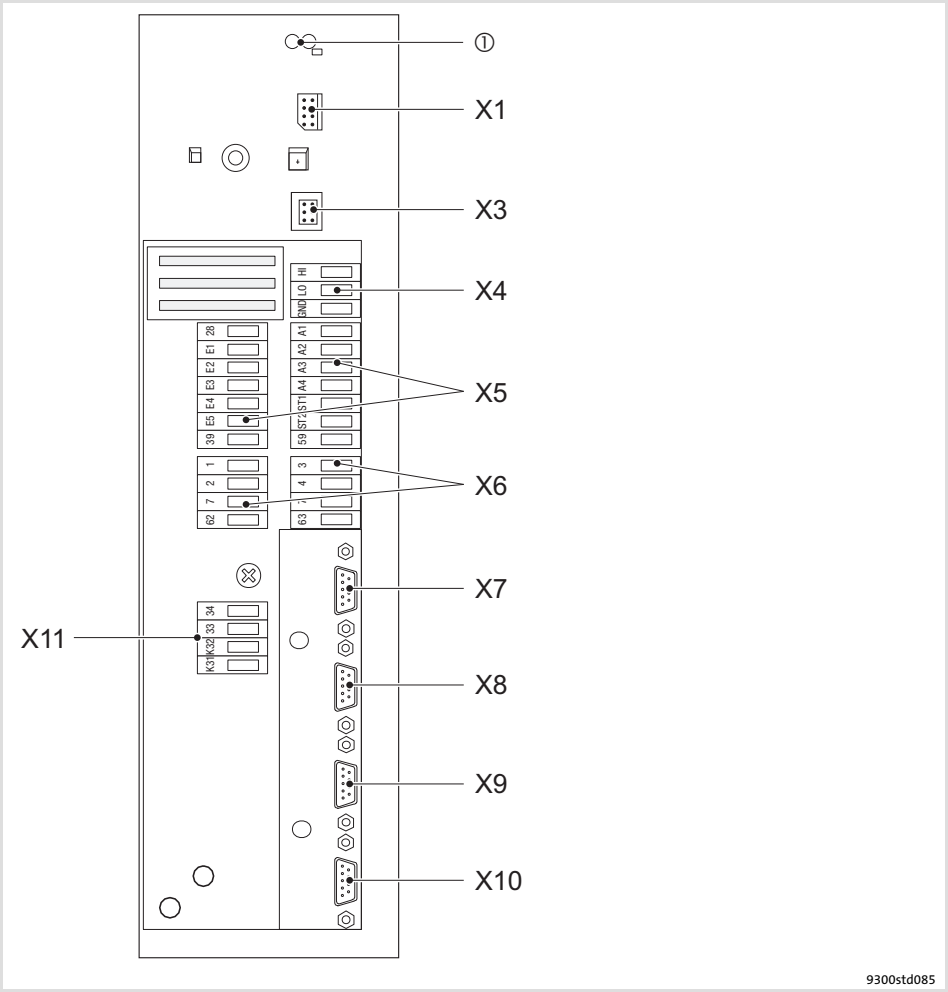

Fig. 5.8-2 Connection terminal of the control card

①	2 light-emitting diodes (red, green) for status display
X1	Automation interface (AIF) Slot for communication modules (e.g. keypad XT)
X3	Jumper for the preselection of the signal type for the input signal at X6/1, X6/2
X4	System bus (CAN) connection, terminal strip
X5	Connection of digital inputs and outputs, terminal strips
X6	Connection of analog inputs and outputs, terminal strips
X7	Resolver connection Plug-in connector: Socket, 9-pole, Sub-D
X8	Incremental encoder connection Plug-in connector: Pin, 9-pole, Sub-D
X9	Connection of digital frequency input signal Plug-in connector: Pin, 9-pole, Sub-D
X10	Connection of digital frequency output signal Plug-in connector: Socket, 9-pole, Sub-D
X11	Connection of safety relay K_{SR}, terminal strip

5.8.3 Device variant without "Safe torque off" function

Internal voltage supply

- ► For the supply of the digital inputs (X5/E1 ... X5/E5) you have to set a freely assignable digital output (e. g. X5/A1) permanently to HIGH level.
- ► For the supply of the analog inputs (X6/1, X6/2 and X6/3, X6/4) you have to set a freely assignable analog output (e. g. X6/63) permanently to HIGH level.

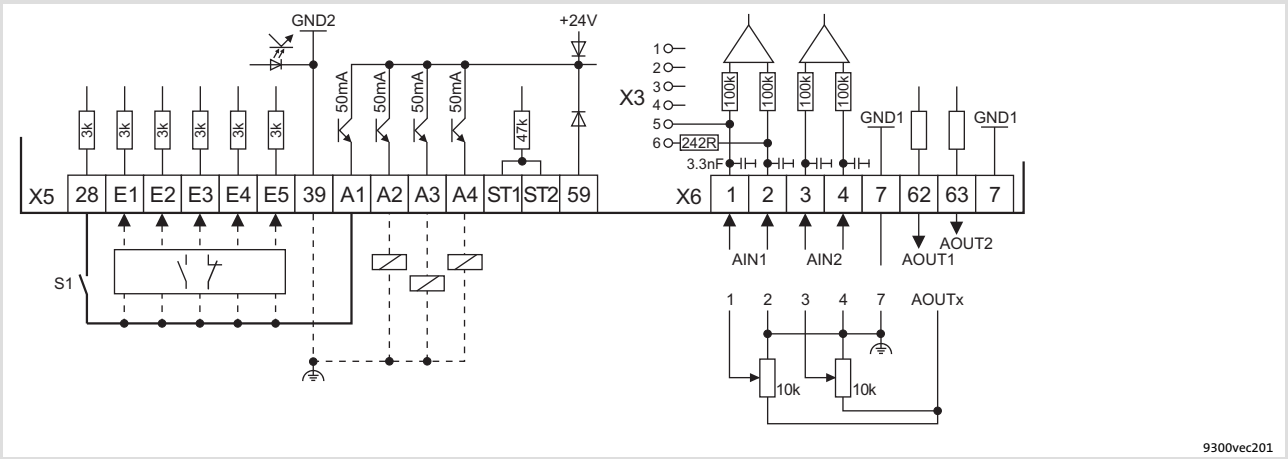

Fig. 5.8-3 Wiring of digital and analog inputs/outputs for internal voltage source

S1 Controller enable
NO contact or NC contact
Load
Minimum wiring required for operation
Terminal assignment in the Lenze setting: 📖 5.8-9

Supply via external voltage source

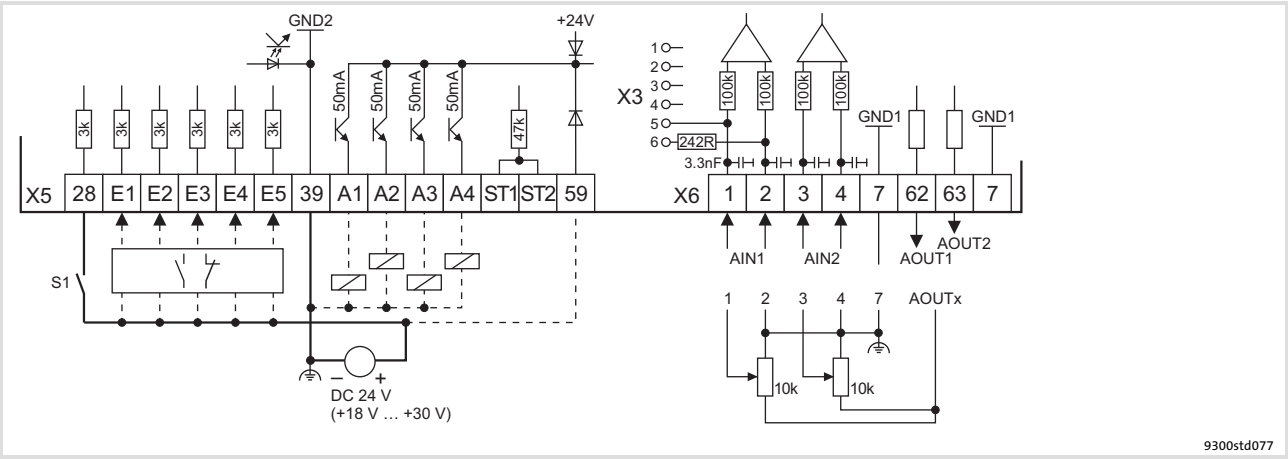

Fig. 5.8-4 Wiring of digital and analog inputs/outputs for external voltage source

S1 Controller enable
NO contact or NC contact
Load
Minimum wiring required for operation
Terminal assignment in the Lenze setting: 📖 5.8-9

5.8.4 Device variant with ”Safe torque off” function

Safety instructions for the installation of the ”Safe torque off” function

- The installation and commissioning of the “Safe torque off” function must be carried out by skilled personnel only.
- All safety-relevant cables (e.g. control cable for the safety relay, feedback contact) outside the control cabinet must be protected, for instance by a cable duct. Short circuits between the single cables must be ruled out!
- Wiring of the safety relay K_{SR} with insulated wire end ferrules or rigid cables is absolutely vital.
- The electrical reference point for the coil of the safety relay K_{SR} must be connected with the protective conductor system (DIN EN 60204-1 paragraph 9.4.3). Only this measure guarantees that the operation is protected against earth faults.

Tip!

A complete description can be found in the chapter ”Safe torque off”.

Internal voltage supply

► If a freely assignable digital output (e. g. X5/A1) is fixedly applied to HIGH level, it serves as an internal voltage source. An output can be loaded with a maximum of 50 mA.

– Via a digital output you can supply the relay K_{SR} and two digital inputs (X5/28, and for instance X5/E1) with voltage.

– For the maximum connection (relay K_{SR} and X5/E1 ... X5/E5) you have to connect two digital outputs in parallel and fixedly apply them to HIGH level.

► For the supply of the analog inputs (X6/1, X6/2 and X6/3, X6/4) you have to set a freely assignable analog output (e. g. X6/63) permanently to HIGH level.

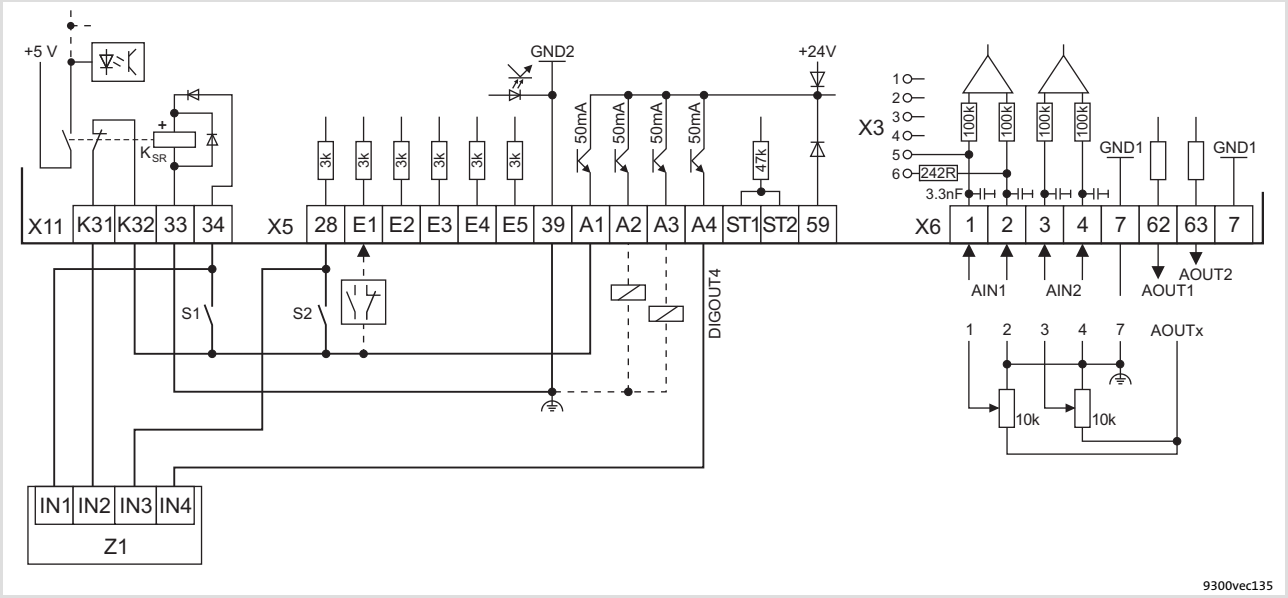

Fig. 5.8-5 Wiring of digital and analog inputs/outputs with active ”Safe torque off” function and internal voltage source

S1 Deactivate pulse inhibit (1st disconnecting path)
S2 Enable controller (2nd disconnecting path)
Z1 Programmable logic controller (PLC)
The PLC monitors the ”Safe torque off” function
X5/A4 Feedback via a digital output (e. g. DIGOUT4)
NO contact or NC contact
Load
Minimum wiring required for operation
Terminal assignment in the Lenze setting: 📖 5.8-9

Note!

If you load a basic configuration C0005 = xx1x (e.g. 1010 for speed control with control via terminals), the following terminals are switched to a fixed signal level:

► Terminal X5/A1 to FIXED1 (corresponds to DC 24 V).

► Terminal X6/63 to FIXED100% (corresponds to 10 V).

Supply via external voltage source

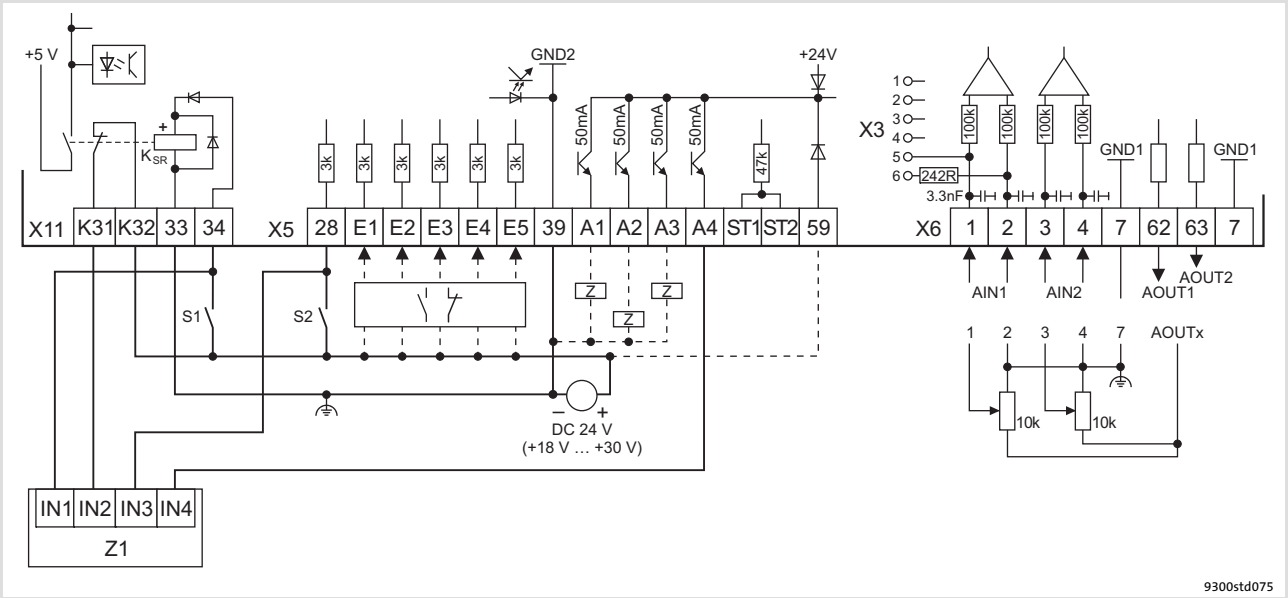

Fig. 5.8-6 Wiring of digital and analog inputs/outputs with active ”Safe torque off” function and external voltage source

S1 Deactivate pulse inhibit (1st disconnecting path)
S2 Enable controller (2nd disconnecting path)
Z1 Programmable logic controller (PLC)
The PLC monitors the ”Safe torque off” function
X5/A4 Feedback via a digital output (e. g. DIGOUT4)
NO contact or NC contact
Load
Minimum wiring required for operation
Terminal assignment in the Lenze setting: 📖 5.8-9

Note!

Supplying the digital inputs via an external voltage source enables a **backup operation in the case of mains failure**. After switching off the mains voltage, all actual values are continued to be detected and processed.

- ► Connect the positive pole of the external voltage source with X5/59 to establish the backup operation in the event of mains failure.
- ► The external voltage source must be able to supply a current ≥ 1 A.
- ► The starting current of the external voltage source is not limited by the controller. Lenze recommends the use of voltage sources with current limitation or with an internal impedance of Z > 1 Ω.

5.8.5 State bus

Stop!

Destruction of the control card!

External voltage at X5/ST1, X5/ST2 destroys the control card.

Protective measure:

Do not connect an external voltage to X5/ST1, X5/ST2.

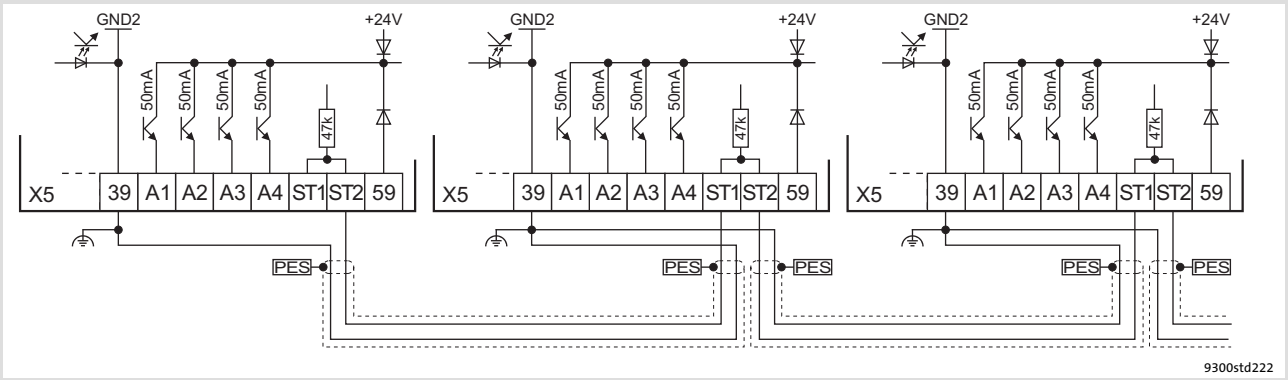

Fig. 5.8-7 Example for wiring a drive system to the STATE BUS

PES HF shield termination by large-surface connection to PE

5.8.6 Terminal assignment

Analog input configuration

Terminal	Jumper strip X3	Jumper setting	Possible levels
X6/1, X6/2	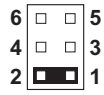	1-2 [1]	-10 V ... +10 V [1]
		3-4	-10 V ... +10 V
		5-6	-20 mA ... +20 mA

[1] Lenze setting (delivery state)

Non-configurable control terminals

Terminal	Description	Function	Level / state
X11/K32 X11/K31	Safety relay K_{SR} 1st disconnecting path	Pulse inhibit feedback	Open contact: pulse inhibit is inactive (operation) Closed contact: pulse inhibit is active
X11/33		– coil of safety relay K_{SR}	Coil is not carrying any current: pulse inhibit is active
X11/34		+ coil of safety relay K_{SR}	Coil is carrying current: pulse inhibit is inactive (operation)
X5/28	Controller inhibit (DCTRL-CINH) 2nd disconnecting path	Controller enable/inhibit	LOW: Controller inhibited HIGH: Controller enabled
X5/ST1 X5/ST2		STATE-BUS	

Configurable control terminals (Lenze setting)

Terminal	Description	Function	Level
X5/E1	Digital inputs	Limit switch, negative side (POS-LIM-NEG)	LOW
X5/E2		Limit switch, positive side (POS-LIM-POS)	LOW
X5/E3		Start positioning program (POS-PRG-START)	LOW-HIGH edge
X5/E4		Reference switch (POS-REF-MARK) and touch probe input	HIGH
X5/E5		Reset TRIP error message (DCTRL-TRIP-RES)	LOW-HIGH edge
		Reset positioning program (PRG-RESET)	HIGH
		Activate manual operation (POS-MANUAL)	HIGH
X5/A1	Digital outputs	Reference known (POS-REF-OK)	HIGH
X5/A2		Position target reached (POS-IN-TARGET)	HIGH
X5/A3		Ready for operation (DCTRL-RDY)	HIGH
X5/A4		Program function output (POS-PFO1) (output can be switched via the positioning program)	HIGH
X6/1, X6/2	Analog inputs	None	-10 V ... +10 V
X6/3, X6/4		None	-10 V ... +10 V
X6/62	Analog outputs	Actual speed value (MCTRL-NACT)	-10 V ... +10 V
X6/63		Torque setpoint (MCTRL-MSET2)	-10 V ... +10 V

5.8.7 Technical data

Safety relay K_{SR}

Terminal	Description	Field	Values
X11/K32 X11/K31 X11/33 X11/34	Safety relay K_{SR} 1st disconnecting path	Coil voltage at +20 °C	DC 24 V (20 ... 30 V)
		Coil resistance at +20 °C	823 Ω ±10 %
		Rated coil power	Approx. 700 mW
		Max. switching voltage	AC 250 V, DC 250 V (0.45 A)
		Max. AC switching capacity	1500 VA
		Max. switching current (ohmic load)	AC 6 A (250 V), DC 6 A (50 V)
		Recommended minimum load	> 50 mW
		Max. switching rate	6 switchings per minute
		Mechanical service life	10^7 switching cycles
		Electrical service life	
		at 250 V AC (ohmic load)	10^5 switching cycles at 6 A 10^6 switching cycles at 1 A 10^7 switching cycles at 0.25 A
		at 24 V DC (ohmic load)	6×10^3 switching cycles at 6 A 10^6 switching cycles at 3 A 1.5×10^6 switching cycles at 1 A 10^7 switching cycles at 0.1 A

Digital inputs, digital outputs

Terminal	Description	Field	Values
X5/28	Controller inhibit (DCTRL-CINH) 2nd disconnecting path	PLC level, HTL	LOW: 0 ... +3 V HIGH: +12 ... +30 V
X5/E1 X5/E2 X5/E3 X5/E4 X5/E5	Digital inputs	PLC level, HTL	LOW: 0 ... +3 V HIGH: +12 ... +30 V
		Input current per input	8 mA for +24 V
		Cycle time	1 ms
X5/A1 X5/A2 X5/A3 X5/A4	Digital outputs	PLC level, HTL	LOW: 0 ... +3 V HIGH: +12 ... +30 V
		Load capacity per output	Maximally 50 mA
		Load resistance	For +24 V at least 480 Ω
		Cycle time	1 ms
X5/39	GND2	Reference potential for digital signals Isolated to X6/7 (GND1)	
X5/59	Connection of external voltage source for backup operation of the drive controller in the case of mains failure	Input voltage	DC 24 V (+18 ... +30 V)
		Current consumption	Maximally 1 A for 24 V
X5/ST1 X5/ST2	STATE-BUS	Maximum number of nodes	20
		Maximum length of the bus cable	5 m

Analog inputs, analog outputs

Terminal	Description	Field	Values
X6/1 X6/2	Analog input 1	Voltage range	
		Level	-10 V ... +10 V
		Resolution	5 mV (11 Bit + sign)
		Current range	
		Level	-20 mA ... +20 mA
		Resolution	20 µA (10 Bit + sign)
X6/3 X6/4	Analog input 2	Voltage range	
		Level	-10 V ... +10 V
		Resolution	5 mV (11 Bit + sign)
X6/62	Analog output 1	Level	-10 V ... +10 V
		Load capacity	Maximum 2 mA
		Resolution	20 mV (9 bits + sign)
		Cycle time	1 ms (smoothing time τ = 2 ms)
X6/63	Analog output 2	Level	-10 V ... +10 V
		Load capacity	Maximum 2 mA
		Resolution	20 mV (9 bits + sign)
		Cycle time	1 ms (smoothing time τ = 2 ms)
X6/7	GND1	Reference potential for analog signals Isolated to X5/39 (GND2)	

5.9 Wiring of the system bus (CAN)

Wiring

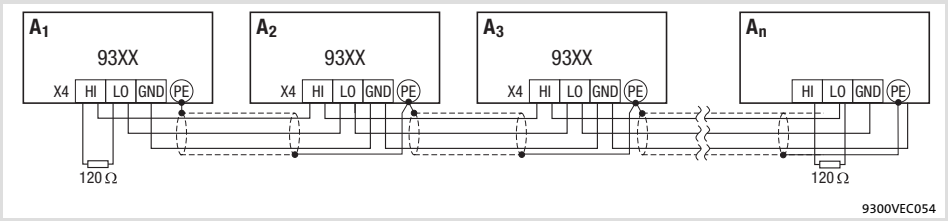

Fig. 5.9-1 System bus (CAN) wiring

A_1	Bus device 1 (controller)
A_2	Bus device 2 (controller)
A_3	Bus device 3 (controller)
A_n	Bus device n (e. g. PLC), n = max. 63
X4/GND	CAN-GND: System bus reference potential
X4/LO	CAN-LOW: System bus LOW (data line)
X4/HI	CAN-HIGH: System bus HIGH (data line)

Stop!

Connect a 120 Ω terminating resistor to the first and last bus device.

We recommend the use of CAN cables in accordance with ISO 11898-2:

CAN cable in accordance with ISO 11898-2	
Cable type	Paired with shielding
Impedance	120 Ω (95 ... 140 Ω)
Cable resistance/cross-section	
Cable length ≤ 300 m	≤ 70 mΩ/m / 0.25 ... 0.34 mm² (AWG22)
Cable length 301 ... 1000 m	≤ 40 mΩ/m / 0.5 mm² (AWG20)
Signal propagation delay	≤ 5 ns/m

5.10 Wiring of the feedback system

5.10.1 Important notes

The feedback signal can either be supplied via input X7 or via input X8.

► At X7 a resolver can be connected.

► At X8 an encoder can be connected.
- Incremental encoder TTL
- SinCos encoder
- SinCos encoder with serial communication (single-turn or multi-turn)

The resolver or encoder signal for slave drives can be output at the digital frequency output X10.

Note!

► We recommend to use Lenze system cables for wiring.

► For self-made cables only use cables with shielded cores twisted in pairs.

Installation material required from the scope of supply:

Description	Use	Quantity
Protective cover	Protection for unused Sub-D connections	4

5.10.2 Resolver at X7

Technical data

Field	Values
Connection at drive controller	Connector: Socket, 9-pole, Sub-D
Resolver type recommended	Receiver
Number of pole pairs of the resolver	1
Transmission ratio	0.3
Evaluation method	Voltage impression in the sine and cosine winding
Max. output voltage	± 10 V
Max. current consumption	50 mA per winding
Max. impedance [Z]	500 Ω per winding
Output frequency	4 kHz
Monitoring	Monitoring for open circuit of the resolver and the resolver cable (configurable)

Wiring

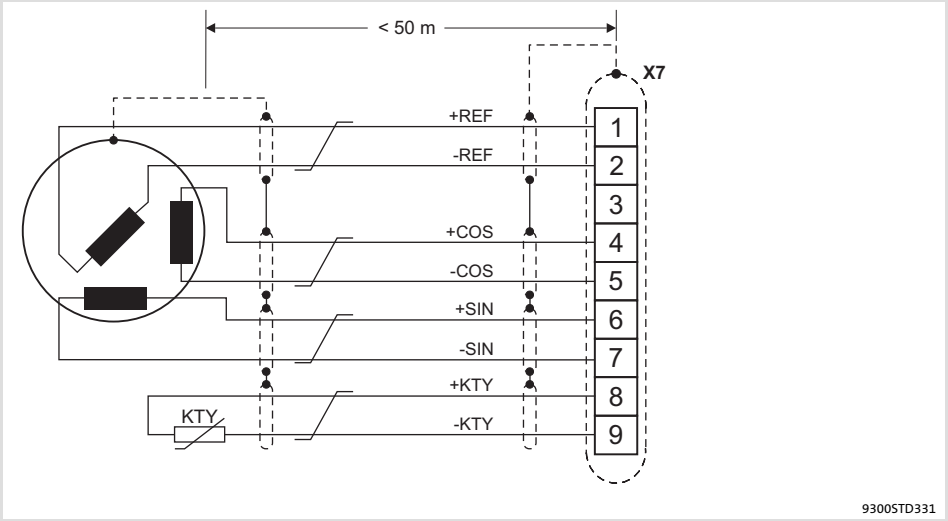

Fig. 5.10-1 Resolver connection

Cores twisted in pairs

X7 - Resolver Connector: Socket, 9-pole, Sub-D									
Pin	1	2	3	4	5	6	7	8	9
Signal	+REF	-REF	GND	+COS	-COS	+SIN	-SIN	+KTY	-KTY
	0.5 mm² (AWG 20)		–	0.14 mm² (AWG 26)					

5.10.3 Incremental encoder with TTL level at X8

Technical data

Field	Values
Connection at drive controller	Connector: Pin, 9-pole, Sub-D
Connectable incremental encoder	Incremental encoder with TTL level ● Encoder with two 5 V complementary signals electrically offset by 90° ● Connection of zero track is possible (optional)
Input frequency	0 ... 500 kHz
Current consumption	6 mA per channel
Internal voltage source (X8/4, X8/5)	5 V DC / max. 200 mA

Wiring

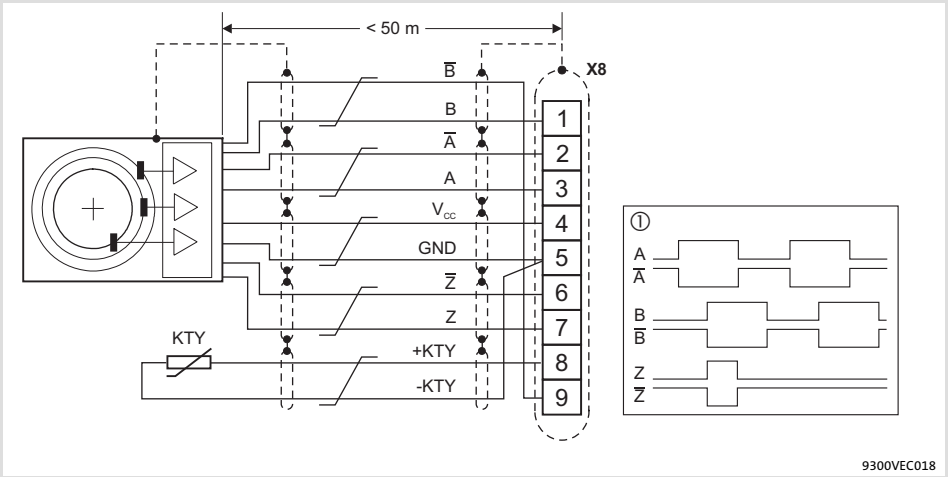

Fig. 5.10-2 Connection of incremental encoder with TTL level (RS-422)

① Signals for CW rotation
Cores twisted in pairs

X8 - Incremental encoder with TTL level Connector: Pin, 9-pole, Sub-D									
Pin	1	2	3	4	5	6	7	8	9
Signal	B	$\overline{A}$	A	V_{CC}	GND (-KTY)	$\overline{Z}$	Z	+KTY	$\overline{B}$
	0.14 mm² (AWG 26)			1 mm² (AWG 18)		0.14 mm² (AWG 26)			

5.10.4 SinCos encoder at X8

Technical data

Field	Values
Connection at drive controller	Connector: Pin, 9-pole, Sub-D
Connectable SinCos encoders	● SinCos encoders with a rated voltage from 5 V... 8 V. ● SinCos encoder of the company Stegmann with Hiperface® interface, Stegmann type SCS/SCM (prolongs the initialisation time of the controller to approx. 2 seconds)
Sine and cosine track voltage	1 V_{ss} ±0.2 V
Voltage RefSIN and RefCOS	+2.5 V
Internal resistance R_i	221 Ω
Internal voltage source (X8/4, X8/5)	5 V DC / max. 200 mA

Wiring

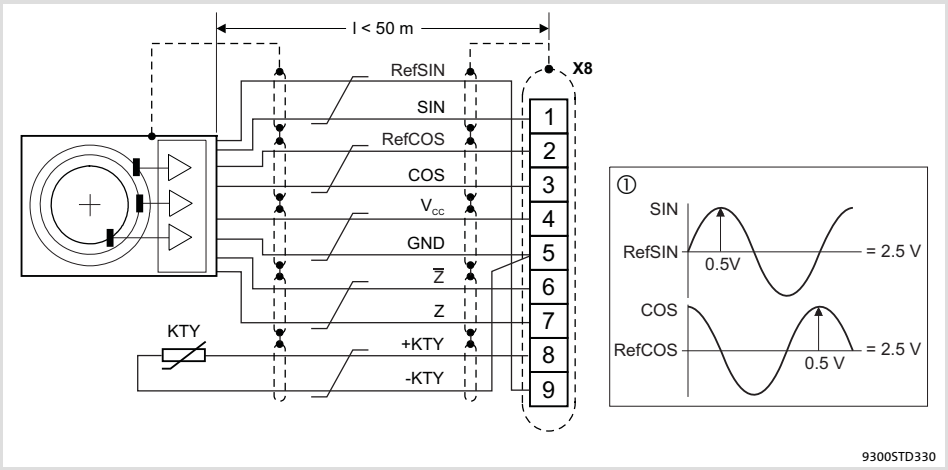

Fig. 5.10-3 SinCos encoder connection

① Signals for CW rotation
Cores twisted in pairs

X8 - SinCos encoder Connector: Pin, 9-pole, Sub-D									
Pin	1	2	3	4	5	6	7	8	9
Signal	SIN	RefCOS	COS	V_{CC}	GND (-KTY)	Z̄ or -RS485	Z or +RS485	+KTY	RefSIN
	0.14 mm² (AWG 26)			1 mm² (AWG 18)		0.14 mm² (AWG 26)			

Note!

► For encoders with tracks SIN, $\overline{SIN}$, COS, $\overline{COS}$:
– Assign RefSIN with $\overline{SIN}$.
– Assign RefCOS with $\overline{COS}$.

5.11 Wiring of digital frequency input / digital frequency output

Installation material required from the scope of supply:

Description	Use	Quantity
Protective cover	Protection for unused Sub-D connections	4

Technical data

Field	Digital frequency output X10
Connection at drive controller	Connector: Socket, 9-pole, Sub-D
Pin assignment	Dependent on the selected basic configuration
Output frequency	0 ... 500 kHz
Signal	Two-track with inverse 5 V signals (RS422) and zero track
Load capacity	Max. 20 mA per channel (up to 3 slave drives can be connected)
Special features	The ”Enable” output signal at X10/8 switches to LOW if the drive controller is not ready for operation (e.g. disconnected from mains). This can trip SD3 monitoring on the slave drive.
Internal voltage source (X10/4, X10/5)	DC 5 V / max. 50 mA Total current at X9/4, X9/5 and X10/4, X10/5: max. 200 mA

Field	Digital frequency input X9
Connection at drive controller	Connector: Pin, 9-pole, Sub-D
Input frequency	0 ... 500 kHz (TTL level)
Signal	Two-track with inverse 5 V signals (RS422) and zero track
Signal evaluation	Via code C0427
Current consumption	Max. 5 mA
Special features	With activated SD3 monitoring, TRIP or warning is tripped if the ”Lamp Control” input signal at X9/8 switches to LOW. Due to this the drive controller can respond if the master drive is not ready for operation.

Wiring

Note!

- ► We recommend to use Lenze system cables for wiring.
- ► For self-made cables only use cables with shielded cores twisted in pairs.

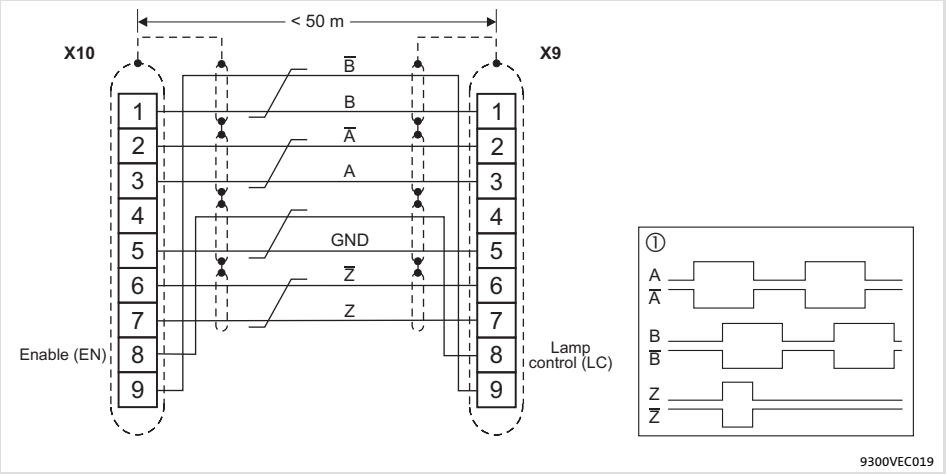

Fig. 5.11-1 Connection of digital frequency input (X9) / digital frequency output (X10)

X9 Slave drive
X10 Master drive

① Signals for CW rotation
Cores twisted in pairs

X9 - Digital frequency input Connector: Pin, 9-pole, Sub-D									
Pin	1	2	3	4	5	6	7	8	9
Signal	B	Ā	A	+5 V	GND	Z̄	Z	LC	B̄
	0.14 mm² (AWG 26)			0.5 mm² (AWG 20)		0.14 mm² (AWG 26)		0.5 mm² (AWG 20)	0.14 mm² (AWG 26)

X10 - Digital frequency output Connector: Socket, 9-pole, Sub-D									
Pin	1	2	3	4	5	6	7	8	9
Signal	B	Ā	A	+5 V	GND	Z̄	Z	EN	B̄
	0.14 mm² (AWG 26)			0.5 mm² (AWG 20)		0.14 mm² (AWG 26)		0.5 mm² (AWG 20)	0.14 mm² (AWG 26)

Adjustment

Evaluation of the input signals at X9		
Code	**Function**	
C0427 = 0	CW rotation	Track A leads track B by 90 ° (positive value at DFIN-OUT)
	CCW rotation	Track A lags track B by 90 ° (negative value at DFIN-OUT)
C0427 = 1	CW rotation	Track A transmits the speed Track B = LOW (positive value at DFIN-OUT)
	CCW rotation	Track A transmits the speed Track B = HIGH (negative value at DFIN-OUT)
C0427 = 2	CW rotation	Track A transmits the speed and direction of rotation (positive value at DFIN-OUT) Track B = LOW
	CCW rotation	Track B transmits the speed and direction of rotation (negative value at DFIN-OUT) Track A = LOW

6 Commissioning

Contents

6.1 Important notes 6.1-1
6.2 Before switching on 6.2-1
6.3 Switch-on sequence 6.3-1
6.3.1 Sequence diagram 6.3-1
6.3.2 Commissioning steps 6.3-2
6.4 Controller inhibit 6.4-1
6.5 Basic settings 6.5-1
6.5.1 Changing the basic configuration 6.5-1
6.5.2 Adapting the controller to the mains 6.5-1
6.5.3 Entry of gearbox factors and feed constants 6.5-2
6.5.4 Entry of motor data 6.5-3
6.5.5 Motor selection list 6.5-6
6.5.6 Motor temperature monitoring with PTC or thermal contact 6.5-12
6.5.7 Motor temperature monitoring with KTY 6.5-13
6.6 Setting the speed feedback 6.6-1
6.6.1 Resolver at X7 . . . . . 6.6-1
6.6.2 Incremental encoder with TTL level at X8 . . . . . 6.6-1
6.6.3 SinCos encoder at X8 . . . . . 6.6-2
6.7 Current controller adjustment 6.7-1
6.8 Adjusting the rotor position 6.8-1
6.9 Changing the assignment of the control terminals X5 and X6 . . . . . 6.9-1
6.9.1 Free configuration of digital input signals 6.9-1
6.9.2 Free configuration of digital outputs 6.9-2
6.9.3 Free configuration of analog input signals 6.9-3
6.9.4 Free configuration of analog outputs 6.9-4
6.10 Manual control 6.10-1
6.10.1 Setting of manual control parameters 6.10-1
6.10.2 Checking the configuration 6.10-2
6.11 Travel profile parameters 6.11-1
6.11.1 Description of the positioning program 6.11-1
6.11.2 Structure of the travel profile 6.11-2
6.11.3 Entering parameters 6.11-4
6.12 Parameter set management 6.12-1
6.12.1 Saving of parameter set 6.12-1
6.12.2 Loading a parameter set 6.12-3

6.13 Homing 6.13-1
6.13.1 Setting the homing parameters 6.13-1
6.13.2 Manual homing 6.13-3
6.14 Controlling the drive 6.14-1
6.15 Automatic control parameter identification 6.15-1
6.15.1 Important notes 6.15-1
6.15.2 Description 6.15-1
6.15.3 Sequence diagram 6.15-3
6.15.4 Troubleshooting 6.15-4
6.16 Commissioning examples 6.16-1

6.1 Important notes

Active loads

Stop!

For applications with active loads (e.g. hoists), you must set C0172 = 0 (OV reduce: threshold for activation of brake torque reduction before OV message) so that an overvoltage message (OV) can be generated.

► As long as the overvoltage message (OV) is active, pulse inhibit is set and the drive operates in zero-torque mode.

► The controller inhibit is also evaluated by the “holding brake (BRK)” function block.

Commissioning sequence

Danger!

Do not change any settings on the controller which are not described in this chapter.

Carry out the commissioning systematically:

1. Carry out basic settings on the controller.
2. Carry out functional test of the manual control.
3. Enter travel profile parameters.
4. Reference the positioning application.
5. Control drive

»Global Drive Control« (GDC)

Use a PC with the »Global Drive Control« (GDC) PC software for commissioning. The full functionality of the servo cam profiler can only be obtained through GDC.

► Possible communication paths between GDC and controller including adapters and connection cables required:

Controller	**Connection**	**PC**	
Interface		PC adapter	Interface
Integrated system bus or CANopen communication module **EMF2175IB**	System bus cable (supplied with the system bus adapters)	System bus adapter **EMF2173IB**	Parallel (printer interface)
		System bus adapter **EMF2177IB**	USB
Communication module LECOM-A/B **EMF2102IBCV001**	Serial cable **EWL0020** **EWL0021**	A standard RS232 / RS485 converter and an RS485 connection cable are required for LECOM-B.	Serial (RS232)
Communication module LECOM-LI **EMF2102IBCV003**	Optical fibre **EWZ0006** **EWZ0007**	Optical fibre adapter **EMF2125IB** **EMF2126IB**	

6.2 Before switching on

Stop!

Special commissioning procedure after long-term storage

If controllers are stored for more than two years, the insulation resistance of the electrolyte may have changed.

Possible consequences:

► During initial switch-on, the DC-bus capacitors and hence the controller are damaged.

Protective measures:

► Form the DC-bus capacitors prior to commissioning. Instructions can be found on the Internet (www.Lenze.com).

Note!

► Keep to the switch-on sequence described.

► The chapter ”Troubleshooting and fault elimination” helps you to eliminate faults during commissioning.

To avoid injury to persons or damage to material assets ...

... before the mains supply is connected, check:

► The wiring for completeness, short circuit and earth fault.

► The ”EMERGENCY STOP” function of the entire system.

► The in-phase connection of the motor.

► The correct connection of the resolver or incremental encoder to prevent the motor from rotating in the wrong direction.

... check the setting of the most important drive parameters before enabling the controller:

► Is the U/f rated frequency adapted to the motor circuit configuration?

► Are the drive parameters relevant for your application set correctly?

► Is the configuration of the analog and digital inputs and outputs adapted to the wiring?

6.3 Switch-on sequence

6.3.1 Sequence diagram

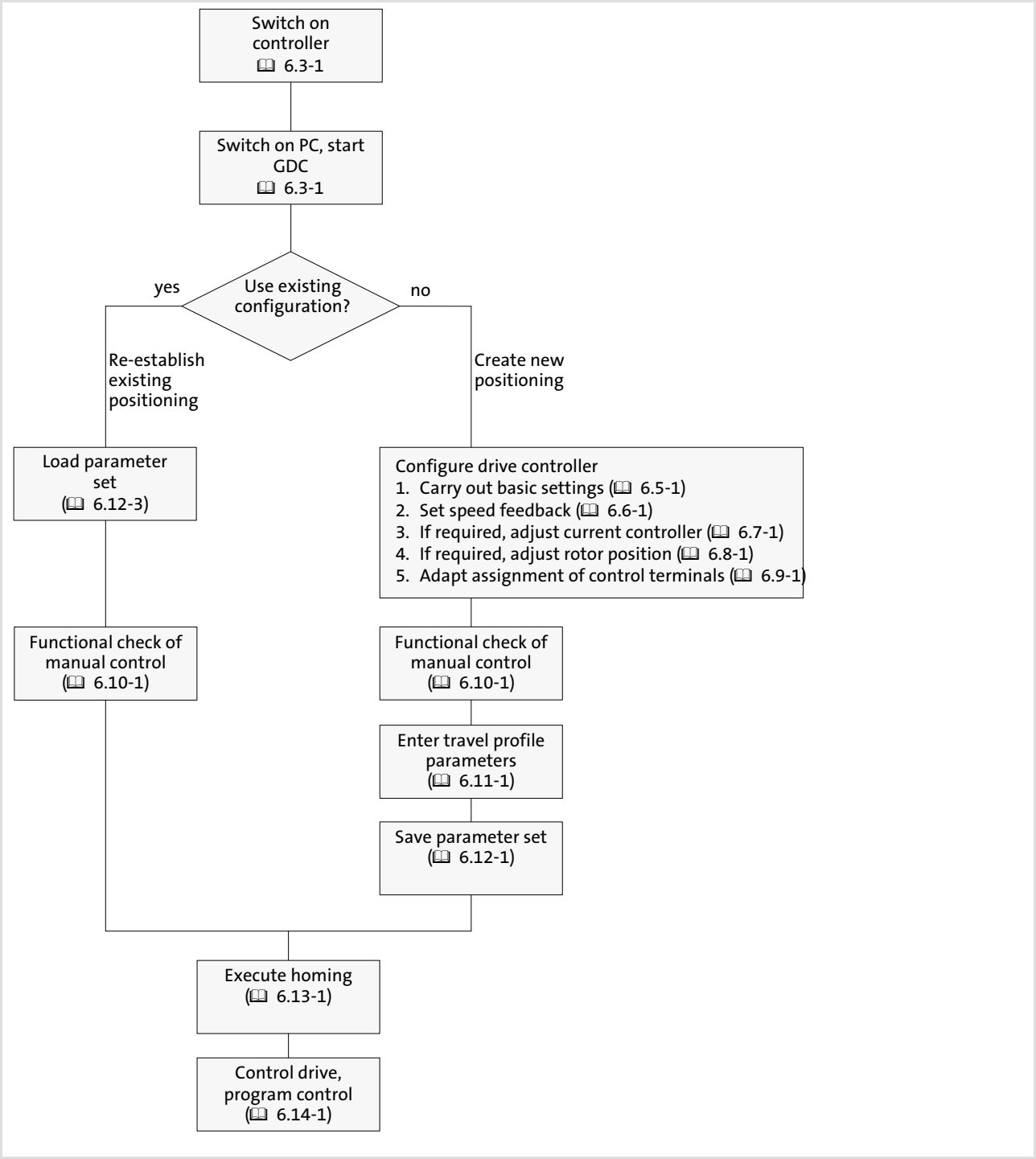

Fig. 6.3-1 Commissioning sequence

6.3.2 Commissioning steps

Switch-on sequence			Comment
1.	Ensure that controller inhibit is active after mains connection.	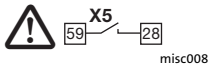	Terminal X5/28 = LOW
2.	Ensure that no external error is pending.		Terminal X5/E4 = HIGH
3.	Switch on controller.		
A	The control card is operated via an external voltage supply: Switch on the external DC 24 V supply voltage.	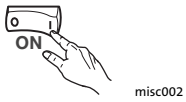	
B	The control card is operated via an internal voltage supply: Switch on the mains. The controller provides the DC 24 V supply.		
4.	After approx. 2 s the controller has initialised.		
5.	Switch on the PC and start GDC.		GDC starts in the online mode if the PC and the controller are connected to each other. Information on the connection establishment can be found in the ”Global Drive Control (GDC) - Getting started” manual.
6.	Do you want to use an existing configuration and positioning?		
A	Yes. Load the desired parameter set to the controller.		📖 6.12-3 Then continue with step 11.
B	No. Configure controller and generate positioning.		Continue with step 7.
7.	Enter the machine parameters in GDC.		
A	Select the basic configuration. Lenze setting: C0005 = 1000 (basic configuration ”speed control”).		📖 6.5-1
B	Adapt the controller to the mains.		📖 6.5-1
C	Enter motor data.		📖 6.5-3
D	Set temperature monitoring of the motor.		Motor with PTC or thermal contact: 📖 6.5-12 Motor with KTY: 📖 6.5-13
E	Select feedback system.		📖 6.6-1
8.	If required, carry out a current controller adjustment.		📖 6.7-1
9.	If required, carry out a rotor position adjustment.		📖 6.8-1
10.	Configure the function of the control terminals to adapt them to your application.		If an internal voltage supply is used, assign ”FIXED1” to X5/x and ”FIXED100%” to X6/x. 📖 6.9-1
11.	Check the travel range limit switches with the manual control.		📖 6.10-1
12.	Enter the travel profile parameters.		📖 6.11-1
13.	Save the settings with mains failure protection in one of the 4 parameter sets (C0003). With C0003 = 1 the settings are saved in parameter set 1.		After connecting the DC 24 V supply or after mains connection, parameter set 1 is activated automatically. (See chapter ”Parameterisation”)
14.	Carry out a homing.		📖 6.13-1
15.	Switch on the mains if previously only the external DC 24 V supply voltage was switched on.		

Switch-on sequence			Comment
16.	Enable the controller.	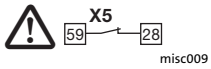	Terminal X5/28 = HIGH (see chapter ”Commissioning” →”Controller inhibit”)
17.	Start the positioning program via the ”Control” dialog box.		📖 6.14-1
18.	The drive is now running.		

Note!

In the ”Diagnostics” menu, the most important drive parameters can be monitored.

6.4 Controller inhibit

Description

If the controller inhibit is active, the power outputs are inhibited.

- ► The drive coasts in zero-torque mode.
- ► Status display of keypad: Pulse inhibit IMP
- ► Status display at the controller: The green LED is blinking.

Danger!

Do not use the ”controller inhibit” function (DCTRL1-CINH) for emergency-off. The controller inhibit only inhibits the power outputs and does **not** disconnect the controller from the mains!

The drive could start again any time.

Activation

Via terminal X5/28:

- ► A LOW level at the terminal inhibits the controller (cannot be inverted)
- ► A HIGH level re-enables the controller

Via the keys of the keypad (if C0469 = 1):

- ► STOP inhibits the controller
- ► RUN re-enables the controller

Via code C0040:

- ► C0040 = 0 inhibits the controller
- ► C0040 = 1 re-enables the controller

Note!

- ► The sources for controller inhibit are ANDed, i.e. the drive only restarts if the controller inhibit signals of all signal sources have been eliminated.
- ► The restart starts with zero speed. If centrifugal masses are still rotating, this can lead to an overcurrent.

6.5 Basic settings

6.5.1 Changing the basic configuration

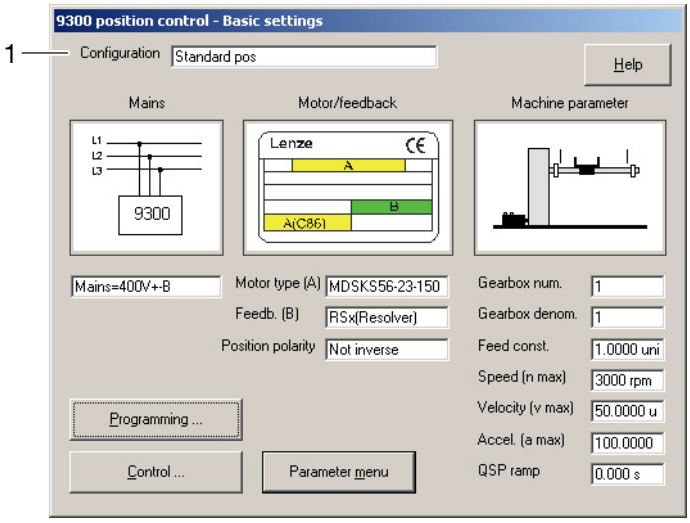

Fig. 6.5-1 ”Basic settings” dialog box

Procedure	
1.	Open the ”Basic settings” dialog box.
2.	Click on field (1) and select a basic configuration suitable for your application, e.g.“10000” (Cam profiler)

6.5.2 Adapting the controller to the mains

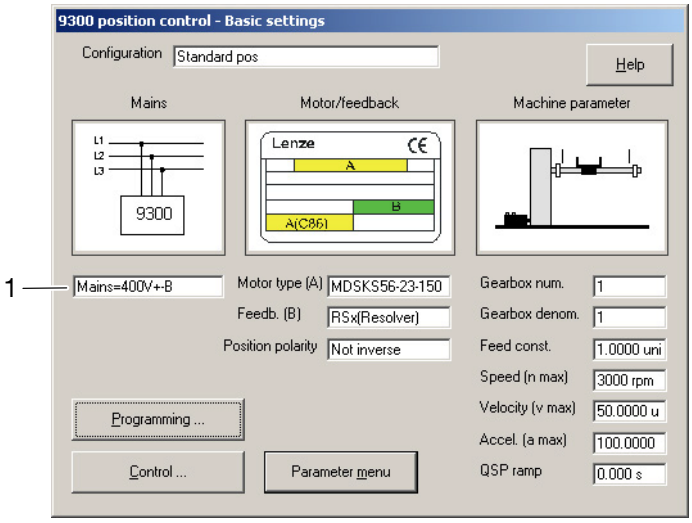

Fig. 6.5-2 ”Basic settings” dialog box

Procedure	
1.	Open the ”Basic settings” dialog box.
2.	Click on field (1) and select the mains voltage and the supplementary component (if used).

6.5.3 Entry of gearbox factors and feed constants

Stop!

Damage to the machine!

- ► Changing the gearbox or feed constants results in the controller losing the exact position of the tool.
- ► If you change gearbox factors or feed constants later, the positioning data already transferred are no longer valid.

Protective measures:

- ► Repeat the positioning data transfer to the drive.

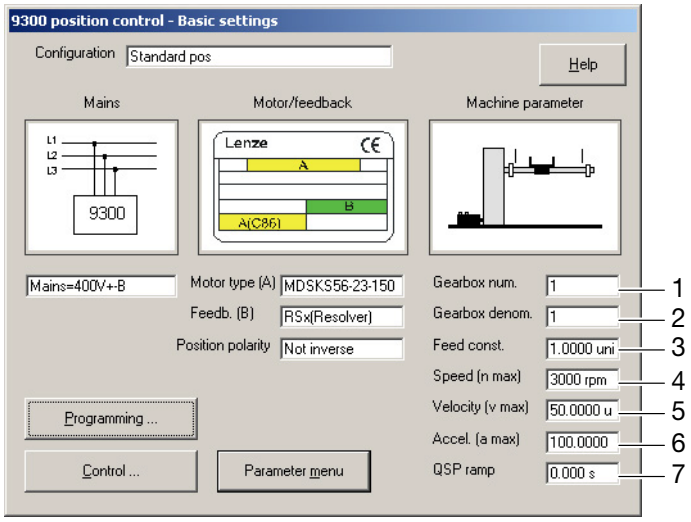

Fig. 6.5-3 ”Basic settings” dialog box

Procedure	
1.	Click on field (1) and enter the numerator for the gearbox ratio of the drive.
2.	Click on field (2) and enter the denominator for the gearbox ratio of the drive.
3.	Click on field (3) and enter the feed at the output end. ● ”units/r” means ”units/revolution”. By entering physical quantities uniformly, e.g. all dimensions in [mm], the uniformity of the entire system is guaranteed.
4.	Click on field (4) and enter the upper limit speed of the drive.
5.	Click on field (5) and enter the max. travel speed of the drive.
6.	Click on field (6) and enter the max. permissible acceleration. ● In the event of faults, or if travel range limit switches are approached, a-max cannot be reached.
7.	Click on field (7) and enter a time for the QSP ramp. ● The value entered defines the time from triggering a fault or from approaching a travel range limit switch to the standstill of the drive.

6.5.4 Entry of motor data

For Lenze motors:

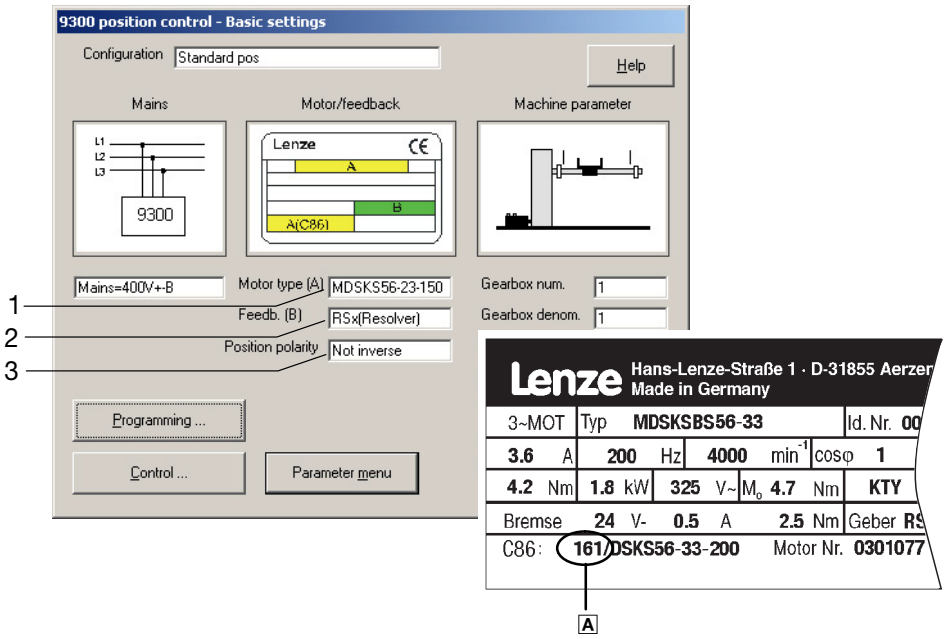

Fig. 6.5-4 ”Basic settings” dialog box

Procedure	
1.	Open the ”Basic settings” dialog box.
2.	Click into field (1) and select the motor connected. Just select the number A specified on the nameplate of the motor from the open field. **Note!** A list of the motors available can be found in the chapter ”Motor selection list”. 📖 6.5-6
3.	Click into field (2) and select the feedback system used.
4.	Click into field (3) and define the position polarity. If ”Inverted” is set, the travelling direction of the drive is inverted.

Enter the 8-digit resolver designation of the nameplate to achieve the highest accuracy.

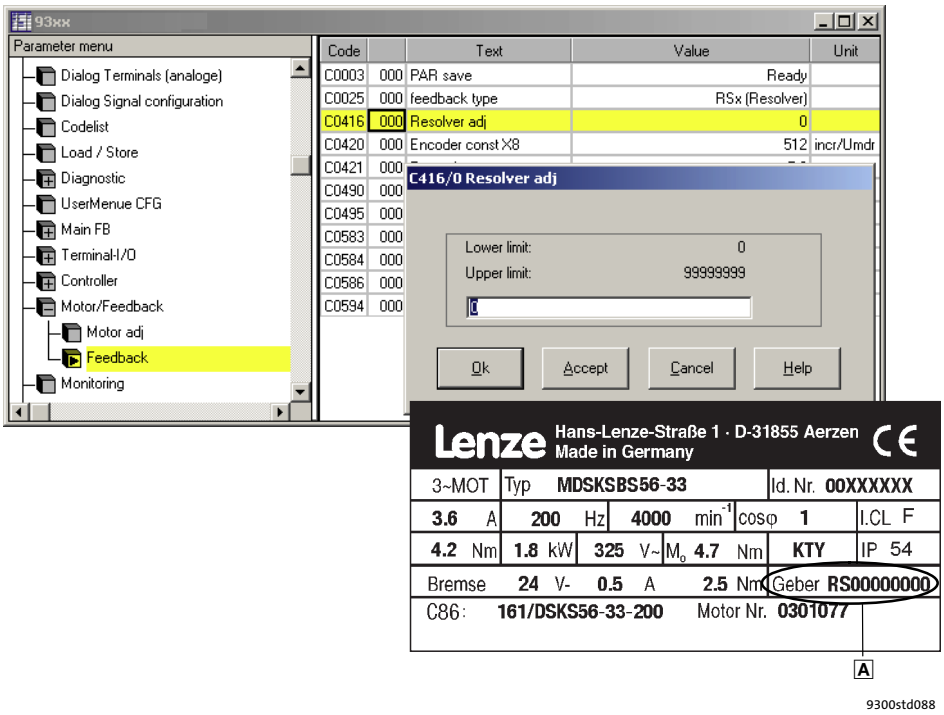

Fig. 6.5-5 ”Feedback” menu of the parameter menu

Procedure	
1.	Open the ”Parameter menu → Motor/Feedback → Feedback” menu.
2.	Click on C0416.
3.	Enter the 8-digit designation A of the motor nameplate in the dialog box.
4.	Confirm with ”OK”.
5.	Save the setting with C0003 = 1.

For non-Lenze motors or Lenze motors not listed under C0086

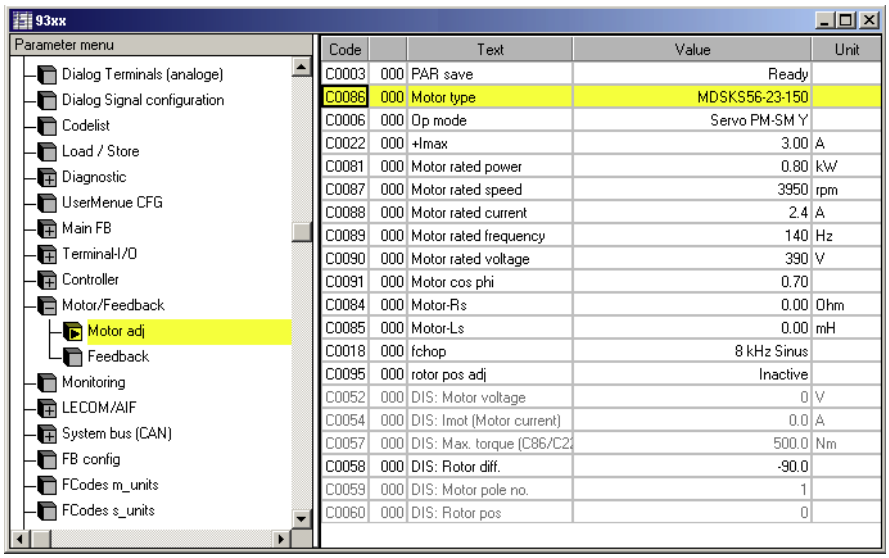

Fig. 6.5-6 ”Motor adj” menu of the parameter menu

Procedure

1. Open the ”Parameter menu → Motor/Feedback → Motor adj” menu.
2. Click on C0086 and select the motor whose data corresponds best with the connected motor.
   Note!
   The available motors are listed in chapter ”Motor selection list”. 📖 6.5-6
3. Click on C0006 and select the motor control operating mode.
4. Enter the data of the connected motor in the following codes. The data can be found on the nameplate or the data sheet of the motor.

C0022	Maximum current I_{max} of the motor
C0081	Rated motor power
C0084	Stator resistance of the motor (The setting is only required if the demands on the control characteristics are very high)
C0085	Leakage inductance of the motor (The setting is only required if the demands on the control characteristics are very high)
C0087	Rated motor speed
C0088	Rated motor current
C0089	Rated motor frequency
C0090	Rated motor voltage
C0091	Cos φ.

5. Save the setting with C0003 = 1.

6.5.5 Motor selection list

Servo motors

The following table lists all servo motor which can be selected under C0086.

In the "Servo motor reference list" you can find the servo motors for which the motor data must be entered manually. (📖 6.5-7)

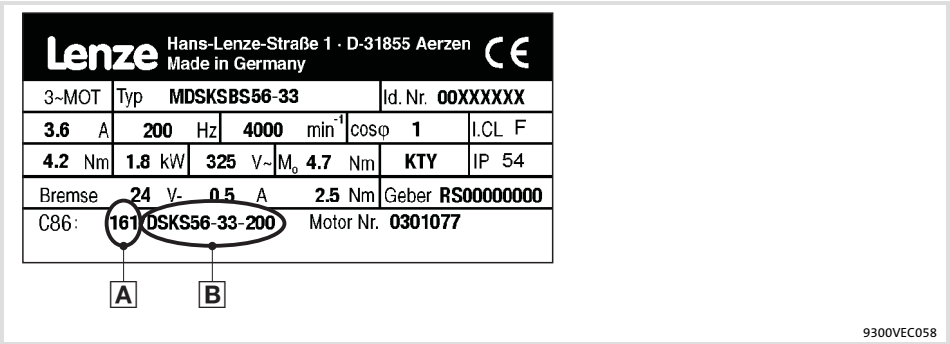

Fig. 6.5-7 Nameplate of a Lenze motor

A	B	Lenze type	C0081 P_r [kW]	C0087 n_r [rpm]	C0088 I_r [A]	C0089 f_r [Hz]	C0090 U_r [V]	Motor type	Temperature sensor
10	MDSKA56-140	MDSKAXX056-22	0.80	3950	2.4	140	390	Asynchronous servo motor	KTY
11	MDFKA71-120	MDFKAXX071-22	2.20	3410	6.0	120			
12	MDSKA71-140	MDSKAXX071-22	1.70	4050	4.4	140			
13	MDFKA80-60	MDFKAXX080-22	2.10	1635	4.8	60			
14	MDSKA80-70	MDSKAXX080-22	1.40	2000	3.3	70			
15	MDFKA80-120	MDFKAXX080-22	3.90	3455	9.1	120			
16	MDSKA80-140	MDSKAXX080-22	2.30	4100	5.8	140			
17	MDFKA90-60	MDFKAXX090-22	3.80	1680	8.5	60			
18	MDSKA90-80	MDSKAXX090-22	2.60	2300	5.5	80			
19	MDFKA90-120	MDFKAXX090-22	6.90	3480	15.8	120			
20	MDSKA90-140	MDSKAXX090-22	4.10	4110	10.2	140	350		
21	MDFKA100-60	MDFKAXX100-22	6.40	1700	13.9	60	390		
22	MDSKA100-80	MDSKAXX100-22	4.00	2340	8.2	80			
23	MDFKA100-120	MDFKAXX100-22	13.20	3510	28.7	120			
24	MDSKA100-140	MDSKAXX100-22	5.20	4150	14.0	140	330		
25	MDFKA112-60	MDFKAXX112-22	11.00	1710	22.5	60	390		
26	MDSKA112-85	MDSKAXX112-22	6.40	2490	13.5	85			
27	MDFKA112-120	MDFKAXX112-22	20.30	3520	42.5	120			
28	MDSKA112-140	MDSKAXX112-22	7.40	4160	19.8	140	320		
30	DFQA100-50	MDFQAXX100-22	10.60	1420	26.5	50	360		
31	DFQA100-100	MDFQAXX100-22	20.30	2930	46.9	100			
32	DFQA112-28	MDFQAXX112-22	11.50	760	27.2	28			
33	DFQA112-58	MDFQAXX112-22	22.70	1670	49.1	58			
34	DFQA132-20	MDFQAXX132-32	17.00	555	45.2	20			
35	DFQA132-42	MDFQAXX132-32	35.40	1200	88.8	42			
40	DFQA112-50	MDFQAXX112-22	20.10	1425	43.7	50			
41	DFQA112-100	MDFQAXX112-22	38.40	2935	81.9	100			
42	DFQA132-36	MDFQAXX132-32	31.10	1035	77.4	36			
43	DFQA132-76	MDFQAXX132-32	60.10	2235	144.8	76	340		

A	B	Lenze type	C0081 P_r [kW]	C0087 n_r [rpm]	C0088 I_r [A]	C0089 f_r [Hz]	C0090 U_r [V]	Motor type	Temperature sensor
50	DSVA56-140	DSVAXX056-22	0.80	3950	2.4	140	390	Asynchronous servo motor	Thermal contact
51	DFVA71-120	DFVAXX071-22	2.20	3410	6.0	120			
52	DSVA71-140	DSVAXX071-22	1.70	4050	4.4	140			
53	DFVA80-60	DFVAXX080-22	2.10	1635	4.8	60			
54	DSVA80-70	DSVAXX080-22	1.40	2000	3.3	70			
55	DFVA80-120	DFVAXX080-22	3.90	3455	9.1	120			
56	DSVA80-140	DSVAXX080-22	2.30	4100	5.8	140			
57	DFVA90-60	DFVAXX090-22	3.80	1680	8.5	60			
58	DSVA90-80	DSVAXX090-22	2.60	2300	5.5	80			
59	DFVA90-120	DFVAXX090-22	6.90	3480	15.8	120			
60	DSVA90-140	DSVAXX090-22	4.10	4110	10.2	140	350		
61	DFVA100-60	DFVAXX100-22	6.40	1700	13.9	60	390		
62	DSVA100-80	DSVAXX100-22	4.00	2340	8.2	80			
63	DFVA100-120	DFVAXX100-22	13.20	3510	28.7	120			
64	DSVA100-140	DSVAXX100-22	5.20	4150	14.0	140	330		
65	DFVA112-60	DFVAXX112-22	11.00	1710	22.5	60	390		
66	DSVA112-85	DSVAXX112-22	6.40	2490	13.5	85			
67	DFVA112-120	DFVAXX112-22	20.30	3520	42.5	120			
68	DSVA112-140	DSVAXX112-22	7.40	4160	19.8	140	320		
108	DSKS36-13-200	MDSKSXX036-13	0.25	4000	0.9	200	245	Synchronous servo motor	KTY
109	DSKS36-23-200	MDSKSXX036-23	0.54	4000	1.1	200	345		
110	MDSKS56-23-150	MDSKSXX056-23	0.60	3000	1.25	150	350		
111	MDSKS56-33-150	MDSKSXX056-33	0.91	3000	2.0	150	340		
112	MDSKS71-13-150	MDSKSXX071-13	1.57	3000	3.1	150	360		
113	MDFKS71-13-150	MDFKSXX071-13	2.29	3000	4.35	150	385		
114	MDSKS71-23-150	MDSKSXX071-23	2.33	3000	4.85	150	360		
115	MDFKS71-23-150	MDFKSXX071-23	3.14	3000	6.25	150	375		
116	MDSKS71-33-150	MDSKSXX071-33	3.11	3000	6.7	150	330		
117	MDFKS71-33-150	MDFKSXX071-33	4.24	3000	9.1	150	345		
160	DSKS56-23-190	MDSKSXX056-23	1.1	3800	2.3	190	330		
161	DSKS56-33-200	MDSKSXX056-33	1.8	4000	3.6	200	325		
162	DSKS71-03-170	MDSKSXX071-03	2.0	3400	4.2	170	330		
163	DFKS71-03-165	MDFKSXX071-03	2.6	3300	5.6	165	330		
164	DSKS71-13-185	MDSKSXX071-13	3.2	3700	7.0	185	325		
165	DFKS71-13-180	MDFKSXX071-13	4.1	3600	9.2	180	325		
166	DSKS71-33-180	MDSKSXX071-33	4.6	3600	10.0	180	325		
167	DFKS71-33-175	MDFKSXX071-33	5.9	3500	13.1	175	325		

Servo motor reference list

The motors listed in the “Motor nameplate data” table column are not included in Global Drive Control (GDC) and in the controller software.

1. Enter the corresponding value of column ”C86” in C0086.
2. Compare the motor data codes with the table values.
   – If necessary, adapt the values in the controller to the table values.
3. Optimise the dynamic performance of your machine via codes C0070 and C0071 if necessary.

Motor nameplate data		Motor data													
Field		C0086	C0022	C0081	C0084	C0085	C0087	C0088	C0089	C0090	C0091	C0070	C0071	C0075	C0076
C86	Type		Imax [A]	P_r [kW]	R_s [Ω]	Lσ [mH]	n_r [rpm]	I_r [A]	f_r [Hz]	U_r [V]	cos φ	V_{pn}	T_{nn}	V_{pi}	T_{ni}
1000	MDSKA-71-22	54	3.75	0.88	8.4	34.98	1950	2.50	70	390	0.82	2	100	1.5	1.5
1001	MDFQA-112-12	33	42.60	12.90	0.45	4.3	1660	28.40	58	360	0.85	20	21	2	1
1002	MDFQA-112-12	41	70.50	21.80	0.45	4.3	2930	47.00	100	360	0.83	14	21	1.3	1

Motor nameplate data		Motor data													
Field		C0086	C0022	C0081	C0084	C0085	C0087	C0088	C0089	C0090	C0091	C0070	C0071	C0075	C0076
C86	Type		Imax [A]	P_r [kW]	R_s [Ω]	Lσ [mH]	n_r [rpm]	I_r [A]	f_r [Hz]	U_r [V]	cos φ	V_{pn}	T_{nn}	V_{pi}	T_{ni}
1003	MDSKA-56-22	50	6.75	1.57	2.25	6.5	6000	4.50	202	280	0.72	3	50	1.3	1.5
1004	MDSKS071-33-39	112	5.10	0.95	7.2	34.5	780	3.40	39	325	1.00	3	20	2.5	1.5
1005	MDSKS071-33-41	112	2.25	0.45	16.3	68	820	1.50	41	330	1.00	2	20	2.5	1.5
1076	MDSKS071-33-90	112	5.85	1.60	3.67	17.7	1800	3.90	90	310	1.00	10	20	0.7	1.7
1077	MDSKA-71-22	51	2.18	0.33	35.7	131.8	725	1.45	30	360	0.78	10	70	1.5	2
1103	SDSGA056-22	50	1.20	0.24	29.3	123	2790	0.80	100	390	0.71	14	150	0.35	1.8
1104	SDSGA056-22	40	2.55	0.24	29.3	123	2790	1.70	100	230	0.71	14	150	0.35	1.8
1105	SDSGA063-22	50	1.80	0.40	29.3	123	2800	1.20	100	390	0.70	14	150	0.35	1.8
1106	SDSGA063-22	40	3.15	0.40	29.3	123	2800	2.10	100	230	0.70	14	150	0.35	1.8
1107	SDSGA063-32	50	2.55	0.60	29.3	123	2800	1.70	100	390	0.70	14	150	0.35	1.8
1108	SDSGA063-32	40	4.50	0.6	29.3	123	2800	3	100	230	0.70	14	150	0.35	1.8
1109	MDSKS056-23-280	114	8.00	1.10	6.72	8.34	5600	2.30	280	320	1.00	10	20	1.3	1.5
1110	MDSKS056-23-310	114	9.00	1.10	5.42	6.78	6200	2.30	310	320	1.00	10	20	1.3	1.5
1111	MDSKS056-33-300	114	10.00	1.75	3.31	4.62	6000	3.60	300	320	1.00	10	20	1.3	1.5
1112	MDSKS056-33-265	114	8.00	1.72	4.1	5.73	5300	3.60	265	320	1.00	10	20	1.3	1.5
1113	MDSKS071-13-265	114	23.00	3.20	0.54	2.56	5300	7.00	265	320	1.00	10	20	1.3	1.5
1116	MDSKS071-33-270	114	25.00	5.70	0.38	1.91	5400	12.50	270	320	1.00	10	20	1.3	1.5

Three-phase asynchronous motors

The following table lists all asynchronous motors which can be selected under C0086.

In the "Asynchronous motor reference list" you can find the asynchronous motors for which the motor data must be entered manually. (📖 6.5-9)

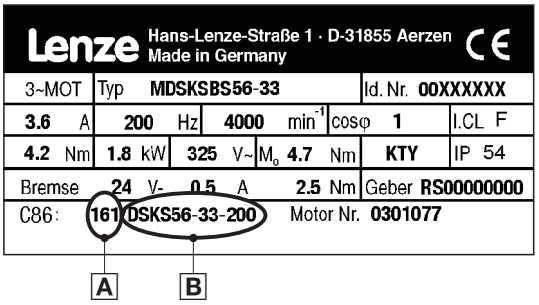

9300VEC058

Fig. 6.5-8 Nameplate of a Lenze motor

A	B	Lenze type	C0081 P_r [kW]	C0087 n_r [rpm]	C0088 I_r [A]	C0089 f_r [Hz]	C0090 U_r [V]	Motor type	Temperature sensor
210	DXRAXX071-12-50	DXRAXX071-12	0.25	1410	0.9	50	400	Asynchronous inverter motor (star connection)	Thermal contact
211	DXRAXX071-22-50	DXRAXX071-22	0.37	1398	1.2				
212	DXRAXX080-12-50	DXRAXX080-12	0.55	1400	1.7				
213	DXRAXX080-22-50	DXRAXX080-22	0.75	1410	2.3				
214	DXRAXX090-12-50	DXRAXX090-12	1.10	1420	2.7				
215	DXRAXX090-32-50	DXRAXX090-32	1.50	1415	3.6				
216	DXRAXX100-22-50	DXRAXX100-22	2.20	1425	4.8				
217	DXRAXX100-32-50	DXRAXX100-32	3.00	1415	6.6				
218	DXRAXX112-12-50	DXRAXX112-12	4.00	1435	8.3				
219	DXRAXX132-12-50	DXRAXX132-12	5.50	1450	11.0				
220	DXRAXX132-22-50	DXRAXX132-22	7.50	1450	14.6				
221	DXRAXX160-12-50	DXRAXX160-12	11.00	1460	21.0				
222	DXRAXX160-22-50	DXRAXX160-22	15.00	1460	27.8				
223	DXRAXX180-12-50	DXRAXX180-12	18.50	1470	32.8				
224	DXRAXX180-22-50	DXRAXX180-22	22.00	1456	38.8				

A	B	Lenze type	C0081 P_r [kW]	C0087 n_r [rpm]	C0088 I_r [A]	C0089 f_r [Hz]	C0090 U_r [V]	Motor type	Temperature sensor
225	30kW-ASM-50	–	30.00	1470	52.0	50	400	Asynchronous inverter motor (star connection)	–
226	37kW-ASM-50	–	37.00	1470	66.0				
227	45kW-ASM-50	–	45.00	1480	82.0				
228	55kW-ASM-50	–	55.00	1480	93.0				
229	75kW-ASM-50	–	75.00	1480	132.0				
250	DXRAXX071-12-87	DXRAXX071-12	0.43	2525	1.5	87	400	Asynchronous inverter motor (delta connection)	Thermal contact
251	DXRAXX071-22-87	DXRAXX071-22	0.64	2515	2.0				
252	DXRAXX080-12-87	DXRAXX080-12	0.95	2515	2.9				
253	DXRAXX080-22-87	DXRAXX080-22	1.3	2525	4.0				
254	DXRAXX090-12-87	DXRAXX090-12	2.0	2535	4.7				
255	DXRAXX090-32-87	DXRAXX090-32	2.7	2530	6.2				
256	DXRAXX100-22-87	DXRAXX100-22	3.9	2535	8.3				
257	DXRAXX100-32-87	DXRAXX100-32	5.35	2530	11.4				
258	DXRAXX112-12-87	DXRAXX112-12	7.10	2545	14.3				
259	DXRAXX132-12-87	DXRAXX132-12	9.7	2555	19.1				
260	DXRAXX132-22-87	DXRAXX132-22	13.2	2555	25.4				
261	DXRAXX160-12-87	DXRAXX160-12	19.3	2565	36.5				
262	DXRAXX160-22-87	DXRAXX160-22	26.4	2565	48.4				
263	DXRAXX180-12-87	DXRAXX180-12	32.4	2575	57.8				
264	DXRAXX180-22-87	DXRAXX180-22	38.7	2560	67.4				
265	30kW-ASM-87	–	52.00	2546	90.0	87	400	Asynchronous inverter motor (delta connection)	–
266	37kW-ASM-87	–	64.00	2546	114.0				
267	45kW-ASM-87	–	78.00	2563	142.0				
268	55kW-ASM-87	–	95.00	2563	161.0				
269	75kW-ASM-87	–	130.00	2563	228.0				

Asynchronous motor reference list

The motors listed in the “Motor nameplate data” table column are not included in Global Drive Control (GDC) and in the controller software.

1. Enter the corresponding value of column ”C86” in C0086.
2. Compare the motor data codes with the table values.
   – If necessary, adapt the values in the controller to the table values.
3. Optimise the dynamic performance of your machine via codes C0070 and C0071 if necessary.

Motor nameplate data		Motor data													
Field		C0086	C0022	C0081	C0084	C0085	C0087	C0088	C0089	C0090	C0091	C0070	C0071	C0075	C0076
C86	Type		Imax [A]	P_r [kW]	R_s [Ω]	Lσ [mH]	n_r [rpm]	I_r [A]	f_r [Hz]	U_r [V]	cos φ	V_{pn}	T_{nn}	V_{pi}	T_{ni}
410	MDXMAXM-071-12	210	1.23	0.25	35.80	116.80	1400	0.82	50	400	0.70	6	300	1.5	10
411	MDXMAXM-071-32	211	1.80	0.37	27.00	112.70	1400	1.20	50	400	0.71	6	300	1.5	10
412	MDXMAXM-080-12	212	2.40	0.55	16.30	78.60	1400	1.60	50	400	0.72	6	300	1.5	10
413	MDXMAXM-080-32	213	3.00	0.75	11.20	59.30	1380	2.00	50	400	0.76	6	300	1.5	10
414	MDXMAXM-090-12	214	3.90	1.10	9.14	41.80	1410	2.60	50	400	0.80	6	300	1.5	10
415	MDXMAXM-090-32	215	5.25	1.50	5.10	27.70	1420	3.50	50	400	0.80	6	300	1.5	10
416	MDXMAXM-100-12	216	8.40	2.20	2.96	18.20	1400	5.60	50	400	0.78	6	300	1.5	10
417	MDXMAXM-100-32	217	10.95	3.00	2.20	13.40	1400	7.30	50	400	0.81	6	300	1.5	10
418	MDXMAXM-112-22	218	12.75	4.00	1.50	10.80	1430	8.50	50	400	0.85	6	300	1.5	10
440	MDXMAXM-071-12	250	2.10	0.43	35.8	116.80	2510	1.40	87	400	0.70	6	300	1.5	10
441	MDXMAXM-071-32	251	3.15	0.64	27.0	112.70	2510	2.10	87	400	0.71	6	300	1.5	10
442	MDXMAXM-080-12	252	4.20	0.95	16.3	78.60	2510	2.80	87	400	0.72	6	300	1.5	10
443	MDXMAXM-080-32	253	5.25	1.30	11.2	59.30	2490	3.50	87	400	0.76	6	300	1.5	10
444	MDXMAXM-090-12	254	6.75	2.00	9.14	41.80	2520	4.50	87	400	0.80	6	300	1.5	10
445	MDXMAXM-090-32	255	9.15	2.70	5.1	27.70	2530	6.10	87	400	0.78	6	300	1.5	10

Motor nameplate data		Motor data													
Field		C0086	C0022	C0081	C0084	C0085	C0087	C0088	C0089	C0090	C0091	C0070	C0071	C0075	C0076
C86	Type		Imax [A]	P_r [kW]	R_s [Ω]	Lσ [mH]	n_r [rpm]	I_r [A]	f_r [Hz]	U_r [V]	cos φ	V_{pn}	T_{nn}	V_{pi}	T_{ni}
446	MDXMAXM-100-12	256	14.55	3.90	2.96	18.20	2510	9.70	87	400	0.81	6	300	1.5	10
447	MDXMAXM-100-32	257	19.05	5.40	2.2	13.40	2510	12.70	87	400	0.85	6	300	1.5	10
448	MDXMAXM-112-22	258	22.20	7.10	1.5	10.80	2540	14.80	87	400	0.78	6	300	1.5	10
449	MDXMAXM-112-32	259	18.75	5.50	2.45	21.40	1440	12.50	50	400	0.78	6	300	1.5	10
450	MDXMAXM-132-22	259	25.20	7.50	1.42	15.00	1460	16.80	50	400	0.77	6	300	1.5	10
451	MDXMAXM-132-32	259	29.25	9.20	1.34	14.00	1450	19.50	50	400	0.85	6	300	1.5	10
1006	MDXMAxx-071-12	210	1.28	0.25	39.90	157.20	1355	0.85	50	400	0.70	6	300	3.6	2
1007	MDXMAxx-071-12	250	2.25	0.47	39.90	157.20	2475	1.50	87	400	0.66	6	300	2	2
1008	MDXMAxx-071-32	211	1.73	0.37	25.03	122.60	1345	1.15	50	400	0.74	6	300	3.4	2
1009	MDXMAxx-071-32	251	3.00	0.67	25.03	122.60	2470	2.00	87	400	0.70	6	300	2.5	2
1010	MDXMAxx-080-12	212	2.40	0.55	20.69	89.00	1370	1.60	50	400	0.78	6	300	3.2	2
1011	MDXMAxx-080-12	252	3.90	1.00	20.69	89.00	2480	2.60	87	400	0.73	6	300	1.6	2
1012	MDXMAxx-080-32	213	2.85	0.75	11.69	65.20	1390	1.90	50	400	0.80	6	300	3.5	2
1013	MDXMAxx-080-32	253	4.95	1.35	11.69	65.20	2510	3.30	87	400	0.77	6	300	1.9	3
1014	MDXMAxx-090-12	214	3.90	1.10	10.01	40.20	1405	2.60	50	400	0.80	6	300	2.5	2
1015	MDXMAxx-090-12	254	6.75	2.00	10.01	40.20	2520	4.50	87	400	0.77	6	300	2	2
1016	MDXMAxx-090-32	215	5.25	1.50	5.85	28.80	1410	3.50	50	400	0.78	6	300	2	2
1017	MDXMAxx-090-32	255	9.15	2.70	5.85	28.80	2525	6.10	87	400	0.76	6	300	1	2
1018	MDXMAxx-100-12	216	7.20	2.20	2.90	20.00	1425	4.80	50	400	0.80	6	300	1	1.5
1019	MDXMAxx-100-12	256	12.45	3.90	2.90	20.00	2535	8.30	87	400	0.76	6	300	0.8	1.5
1020	MDXMAxx-100-32	217	9.75	3.00	2.10	17.00	1415	6.50	50	400	0.81	6	300	2.5	1.5
1021	MDXMAxx-100-32	257	17.10	5.40	2.10	17.00	2530	11.40	87	400	0.78	6	300	1.4	1.8
1022	MDXMAxx-112-22	218	12.45	4.00	1.50	11.00	1435	8.30	50	400	0.82	6	300	2	2
1023	MDXMAxx-112-22	258	21.45	7.10	1.50	11.00	2545	14.30	87	400	0.83	6	300	1	2
1024	MDXMAxx-132-12	219	16.50	5.50	0.86	13.00	1450	11.00	50	400	0.84	6	300	1.5	2
1025	MDXMAxx-132-12	259	28.65	9.70	0.86	13.00	2555	19.10	87	400	0.83	6	300	1.3	2
1026	MDXMAxx-132-22	220	21.90	7.50	0.80	11.00	1450	14.60	50	400	0.85	6	300	1.5	2
1027	MDXMAxx-132-22	260	38.10	13.20	0.80	11.00	2555	25.40	87	400	0.84	6	300	0.95	1.8
1028	MDXMAxx-160-22	221	31.50	11.00	0.50	7.00	1460	21.00	50	400	0.85	6	300	1.9	2.2
1029	MDXMAxx-160-22	261	54.75	19.30	0.50	7.00	2565	36.50	87	400	0.85	6	300	1	2
1030	MDXMAxx-160-32	222	41.70	15.00	0.40	5.50	1460	27.80	50	400	0.87	6	300	1.7	2.5
1031	MDXMAxx-160-32	262	72.60	26.40	0.40	5.50	2565	48.40	87	400	0.86	6	300	1	1.8
1032	MDXMAxx-180-12	223	49.20	18.50	0.40	4.00	1470	32.80	50	400	0.90	6	300	1.4	1.7
1033	MDXMAxx-180-12	263	86.70	32.40	0.40	4.00	2575	57.80	87	400	0.89	6	300	1	1.7
1034	MDXMAxx-180-22	224	58.20	22.00	0.20	3.80	1456	38.80	50	400	0.90	6	300	1	1.5
1035	MDXMAxx-180-22	264	101.1	38.70	0.20	3.80	2560	67.40	87	400	0.89	6	300	1	1.5
1036	MDXMAXM-63-12	210	0.68	0.12	87.58	610.53	1390	0.45	50	400	0.65	6	300	1.5	10
1037	MDXMAXM-63-12	250	1.17	0.21	87.58	610.53	2500	0.78	87	400	0.65	6	300	1.5	10
1038	MDXMAXM-63-32	210	0.98	0.18	56.90	342.11	1400	0.65	50	400	0.65	6	300	1.5	10
1039	MDXMAXM-63-32	250	1.70	0.31	56.90	342.11	2510	1.13	87	400	0.65	6	300	1.5	10
1040	MDXMAXM-112-32	219	18.75	5.50	0.86	7.20	1440	12.50	50	400	0.78	6	300	1.5	10
1041	MDXMAXM-112-32	259	32.55	9.60	0.86	7.20	2550	21.70	87	400	0.78	6	300	1.5	10
1042	MDXMAXM-132-22	220	25.20	7.50	0.54	4.80	1460	16.80	50	400	0.77	6	300	1.5	10
1043	MDXMAXM-132-22	260	43.80	13.10	0.54	4.80	2570	29.20	87	400	0.77	6	300	1.5	10
1044	MDXMAXM-132-32	221	29.25	9.20	0.46	4.70	1450	19.50	50	400	0.85	6	300	1.5	10
1045	MDXMAXM-132-32	261	50.70	16.00	0.46	4.70	2560	33.80	87	400	0.85	6	300	1.5	10
1046	MDXMAXM-160-22	260	31.50	11.00	1.27	18.97	1466	21.00	50	400	0.86	6	300	1.5	10
1047	MDXMAXM-160-32	260	42.30	15.00	0.87	14.28	1466	28.20	50	400	0.87	6	300	1.5	10
1048	MDXMAXM-180-22	260	54.60	18.50	0.40	4.00	1440	36.40	50	400	0.87	6	300	1.5	10
1049	MDXMAXM-180-32	260	66.15	22.00	0.20	3.80	1465	44.10	50	400	0.85	6	300	1.5	10
1050	MDXMAXM-200-32	260	90.00	30.00	0.17	3.50	1455	60.00	50	400	0.85	6	300	1.5	10
1051	MDXMAXM-225-12	260	108.0	37.00	0.15	2.00	1460	72.00	50	400	0.86	6	300	1.5	10
1052	MDXMAXM-225-22	260	128.25	45.00	0.15	2.00	1475	85.50	50	400	0.84	6	300	1.5	10

Motor nameplate data		Motor data													
Field		C0086	C0022	C0081	C0084	C0085	C0087	C0088	C0089	C0090	C0091	C0070	C0071	C0075	C0076
C86	Type		Imax [A]	P_r [kW]	R_s [Ω]	Lσ [mH]	n_r [rpm]	I_r [A]	f_r [Hz]	U_r [V]	cos φ	V_{pn}	T_{nn}	V_{pi}	T_{ni}
1053	MDXMAXM-063-11	210	1.43	0.18	51.00	273.7	2760	0.95	50	400	0.80	6	300	1.5	10
1054	MDXMAXM-063-31	210	1.65	0.25	33.00	93.4	2760	1.10	50	400	0.83	6	300	1.5	10
1055	MDXMAXM-071-11	211	1.50	0.37	22.50	90.2	2840	1.00	50	400	0.78	6	300	1.5	10
1056	MDXMAXM-071-31	212	2.25	0.55	16.90	62.9	2840	1.50	50	400	0.82	6	300	1.5	10
1057	MDXMAXM-080-11	213	2.85	0.75	11.36	47.4	2850	1.90	50	400	0.80	6	300	1.5	10
1058	MDXMAXM-080-31	214	4.20	1.10	6.86	33.4	2810	2.80	50	400	0.82	6	300	1.5	10
1059	MDXMAXM-090-11	215	4.80	1.50	5.10	22.2	2840	3.20	50	400	0.85	6	300	1.5	10
1060	MDXMAXM-090-31	216	7.20	2.20	3.20	14.5	2840	4.80	50	400	0.86	6	300	1.5	10
1061	MDXMAXM-100-31	217	9.30	3.00	1.81	10.7	2850	6.20	50	400	0.88	6	300	1.5	10
1062	MDXMAXM-100-41	218	12.75	4.00	1.45	8.6	2830	8.50	50	400	0.85	6	300	1.5	10
1063	MDXMAXM-112-31	250	18.30	5.50	3.10	17	2890	12.20	50	400	0.83	6	300	1.5	10
1064	MDXMAXM-112-41	250	23.25	7.50	1.96	12	2900	15.50	50	400	0.87	6	300	1.5	10
1065	MDXMAXM-132-21	250	28.05	9.00	1.41	11.292	2925	18.70	50	400	0.89	6	300	1.5	10
1066	MDXMAXM-071-13	210	1.13	0.18	58.93	342	870	0.75	50	400	0.71	6	300	1.5	10
1067	MDXMAXM-071-13	250	1.95	0.31	58.93	342	1610	1.30	87	400	0.71	6	300	1.5	10
1068	MDXMAXM-071-33	210	1.50	0.25	37.90	116.8	920	1.00	50	400	0.63	6	300	1.5	10
1069	MDXMAXM-071-33	250	2.55	0.43	37.90	116.8	1660	1.70	87	400	0.63	6	300	1.5	10
1070	MDXMAXM-080-13	211	2.10	0.37	28.00	112.7	900	1.40	50	400	0.67	6	300	1.5	10
1071	MDXMAXM-080-13	251	3.60	0.64	28.00	112.7	1640	2.40	87	400	0.67	6	300	1.5	10
1072	MDXMAXM-080-33	212	2.85	0.55	16.60	78.6	900	1.90	50	400	0.68	6	300	1.5	10
1073	MDXMAXM-080-33	252	4.95	0.95	16.60	78.6	1640	3.30	87	400	0.68	6	300	1.5	10
1078	MDFMAxx-250-22	224	147.75	55.00	0.04	1.92	1475	98.50	50	400	0.86	6	300	1	2
1079	MDFMAxx-250-22	264	255.90	95.00	0.04	1.92	2585	170.60	87	400	0.86	6	300	1	2
1080	MDEBAXM-063-12	210	0.68	0.12	87.58	610.53	1390	0.45	50	400	0.65	6	300	1.5	10
1081	MDEBAXM-063-12	250	1.17	0.21	87.58	610.53	2500	0.78	87	400	0.65	6	300	1.5	10
1082	MDEBAXM-063-32	210	0.98	0.18	56.90	342.11	1400	0.65	50	400	0.65	6	300	1.5	10
1083	MDEBAXM-063-32	250	1.70	0.31	56.90	342.11	2510	1.13	87	400	0.65	6	300	1.5	10
1084	MDEBAXM-071-12	210	1.35	0.25	39.90	157.20	1390	0.90	50	400	0.64	6	300	3.6	2
1085	MDEBAXM-071-12	250	2.34	0.43	39.90	157.20	2500	1.56	87	400	0.64	6	300	2	2
1086	MDEBAXM-071-32	211	1.95	0.37	25.03	122.60	1380	1.30	50	400	0.64	6	300	3.4	2
1087	MDEBAXM-071-32	251	3.38	0.64	25.03	122.60	2490	2.25	87	400	0.64	6	300	2.5	2
1088	MDEBAXM-080-12	212	2.40	0.55	20.69	89.00	1400	1.60	50	400	0.68	6	300	3.2	2
1089	MDEBAXM-080-12	252	4.16	0.95	20.69	89.00	2510	2.77	87	400	0.68	6	300	1.6	2
1090	MDEBAXM-080-32	213	3.00	0.75	11.69	65.20	1400	2.00	50	400	0.72	6	300	3.5	2
1091	MDEBAXM-080-32	253	5.20	1.30	11.69	65.20	2510	3.46	87	400	0.72	6	300	1.9	3
1092	MDEBAXM-090-12	214	4.05	1.10	6.40	37.00	1420	2.70	50	400	0.77	6	300	2.5	2
1093	MDEBAXM-090-12	254	7.05	2.00	6.40	37.00	2535	4.70	87	400	0.77	6	300	2	2
1094	MDEBAXM-090-32	215	5.40	1.50	4.80	26.00	1415	3.60	50	400	0.77	6	300	2	2
1095	MDEBAXM-090-32	255	9.30	2.70	4.80	26.00	2530	6.20	87	400	0.77	6	300	1	2
1096	MDEBAXM-100-12	216	7.20	2.20	2.90	20.00	1425	4.80	50	400	0.80	6	300	1	1.5
1097	MDEBAXM-100-12	256	12.45	3.90	2.90	20.00	2535	8.30	87	400	0.80	6	300	0.8	1.5
1098	MDEBAXM-100-32	217	9.90	3.00	2.10	17.00	1415	6.60	50	400	0.81	6	300	2.5	1.5
1099	MDEBAXM-100-32	257	17.10	5.35	2.10	17.00	2530	11.40	87	400	0.81	6	300	1.4	1.8
1100	MDEBAXM-112-22	218	12.45	4.00	1.50	11.00	1435	8.30	50	400	0.82	6	300	2	2
1101	MDEBAXM-112-22	258	21.45	7.10	1.50	11.00	2545	14.30	87	400	0.82	6	300	1	2
1102	MDEBAXM-112-32	219	17.85	5.50	2.71	21.40	1425	11.90	50	400	0.84	6	300	1.5	10
1114	MDFMAxx-200-32	224	83.25	30.00			1465	55.50	50	400	0.85	6	300	1	2
1115	MDFMAxx-200-32	264	145.50	52.00			2575	97.00	87	400	0.85	6	300	1	2

6.5.6 Motor temperature monitoring with PTC or thermal contact

Description

PTC resistors according to DIN 44081 and DIN 44082 can be connected via the terminal inputs T1 and T2. The motor temperature is measured and integrated into the drive monitoring.

A thermal contact (NC contact) can also be connected to T1 and T2. Lenze three-phase AC motors provide thermal contacts as default.

When using motors equipped with PTC resistors or thermostats, we recommend to always activate the PTC input. This prevents the motor from being destroyed by overheating.

Stop!

- ► The motor temperature monitoring may only be connected to T1, T2 if the cable is terminated with a PTC or thermal contact (NC contact) on the motor side.
  - – An ”open” cable acts like an antenna and can cause faults on the drive controller.
  - – Input signals at T1, T2 are processed with a delay of 2 s.
- ► The drive controller can only evaluate one PTC resistor! Do not connect several PTC resistors in series or in parallel:
  - – The motor temperature would be measured incorrectly.
  - – The motors could be destroyed by overheating.
- ► If you operate several motors on a drive controller, use thermal contacts (NC contacts) for motor temperature monitoring and connect these in series.
- ► To achieve full motor protection, an additional temperature monitoring with separate evaluation must be installed.

Activation

Note!

- ► In the Lenze setting the motor temperature monitoring is switched off!
- ► If you work with several parameter sets, the monitoring must be activated separately in each parameter set!

1. Connect the monitoring circuit of the motor to T1 and T2.
   – With 1.6 kΩ < R < 4 kΩ, the monitoring responds.
2. Set the controller reaction:
   – C0585 = 3: Temperature monitoring of the motor is switched off.
   – C0585 = 0: TRIP error message (display of keypad: OH8 Trip)
   – C0585 = 2: Warning signal (display of keypad: OH8 Warn)

Function test

Connect the PTC input with a fixed resistor:

► R > 4 kΩ: The fault message OH8 must be activated.

► R < 1 kΩ: Fault message must not be activated.

6.5.7 Motor temperature monitoring with KTY

Description

- ► There are two possibilities to connect a KTY resistor:
  - – At the incremental encoder connection X8 (pins X8/5 and X8/8)
  - – At the resolver connection X7 (pins X7/8 and X7/9)
- ► The motor temperature is measured and integrated into the drive monitoring.
- ► The KTY resistor is monitored for open and short circuit.
- ► When using motors equipped with KTY resistors, we recommend always to activate the KTY input. This prevents the motor from being destroyed by overheating.

Stop!

- ► The controller can only evaluate one KTY resistor! Do not use several KTY resistors connected in series or in parallel:
  - – This would result in an incorrect measurement of the motor temperature.
  - – The motors could be destroyed by overheating.
- ► If several motors are operated on a controller, use thermal contacts (NC contacts) for monitoring the motor temperature and connect theses contacts in series.
- ► To ensure full motor protection, an additional temperature monitoring with separate evaluation has to be installed.

Activation

Stop!

Overheating of the motor!

In the Lenze setting, temperature monitoring of the motor is deactivated (C0583 = 3). The motor temperature in C0063 shows 0 °C even if C0584 = 2 is set.

Possible consequences:

► The motor can be damaged by a too high motor temperature.

Protective measures:

► Activate the monitoring of the motor temperature via X7 or X8 with C0583 = 2 or C0584 = 2.

► Set C0594 = 2 or 3. Then the connection is additionally monitored with regard to short circuit and interruption.

► If you work with several parameter sets, you have to activate the monitoring separately in each parameter set.

1. Connect monitoring circuit of the motor to X7/8, X7/9 or X8/5, X8/8.
2. Set response of the controller for short circuit or interruption on the connection (monitoring of the motor temperature has to be activated):
   – C0594 = 3: monitoring is switched off.
   – C0594 = 0: TRIP error message (keypad display: Sd6 Trip)
   – C0594 = 2: warning signal (keypad display: Sd6 Warn)

Adjustment

Monitoring with a fixed operating temperature (150 °C)

1. Set response of the controller:
   – C0583 = 3: temperature monitoring of the motor switched off.
   – C0583 = 0: TRIP error message (keypad display: OH3 Trip)
   – C0583 = 2: warning signal (keypad display: OH3 Warn)

Monitoring with a variable operating temperature (45...150 °C)

1. Set the operating temperature in C0121.
2. Set response of the controller:
   – C0584 = 3: temperature monitoring of the motor switched off.
   – C0584 = 2: warning signal (keypad display: OH7 Warn)

Adjustment of KTY operating range

The temperature and resistance range can be adapted to the KTY used.

► C1190 = 0: Fixed operating range for KTY in Lenze motors (Lenze setting)

► C1190 = 1: Adjustable operating range

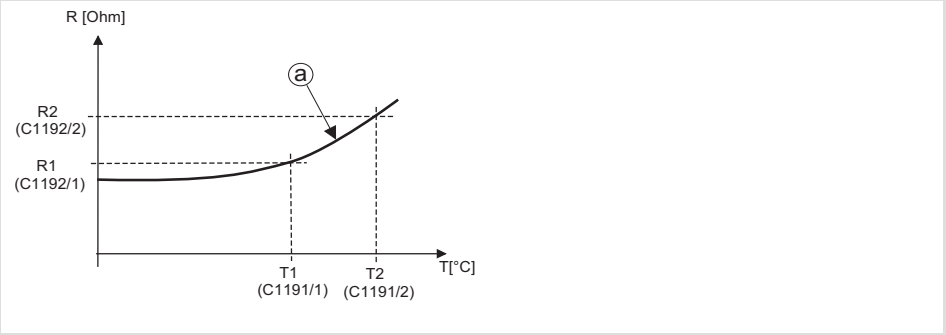

Fig. 6.5-9 Setting of the operating range for the KTY (C1190 = 1)

The operating range is specified by means of limit values and is in the almost linear section of the graph (a). The operating values are determined by interpolation.

C1191/1 C1191/2	Setting of the lower and upper temperature value (T1, T2) corresponding to the KTY used.
C1192/1 C1192/2	Setting of the lower and upper resistance value corresponding to the KTY used.

6.6 Setting the speed feedback

Description

The feedback signal can either be supplied via input X7 or via input X8.

► At X7 a resolver can be connected.

► At X8 an encoder can be connected.
– Incremental encoder TTL
– SinCos encoder
– SinCos encoder with serial communication (single-turn or multi-turn)

The resolver or encoder signal for slave drives can be output at the digital frequency output X10.

Note!

► Use a SinCos encoder with serial communication (multi-turn) if homing of the drive is not possible. Please specify the motor/encoder combination in your order.

► You can only use 2 of the 3 interfaces X8, X9, X10 simultaneously. Due to this it may be possible that the incremental encoder input cannot be activated or the digital frequency input / digital frequency output does not work.
– This dependency does not apply if the digital frequency output X10 is set to reproduction of the input signals at X8 or X9 (C0540 = 4 or 5).
– To deactivate the digital frequency input, it may be necessary to delete the internal signal link from function block DFIN to the following function block. Remove the function block DFIN from the processing table.

6.6.1 Resolver at X7

Resolvers can be operated at X7. For the wiring diagram and the pin assignment of X7, please refer to chapter ”Wiring of the standard device” → ”Wiring of the feedback system”.

Activation

► C0025 = 10 (Lenze setting)

► Monitoring (SD2) of the resolver and the resolver cable for open circuit:
C0586 = 0 (TRIP, Lenze setting)
C0586 = 2 (warning)
C0586 = 3 (off)

6.6.2 Incremental encoder with TTL level at X8

Incremental encoders with TTL level can be operated at X8. For the wiring diagram and the pin assignment of X8, please refer to chapter ”Wiring of the standard device” → ”Wiring of the feedback system”.

Activation

► C0025 = 110, 111, 112 or 113. The number of increments (512, 1024, 2048 or 4096) is set automatically.

Adjustment

The incremental encoder is supplied with voltage by the drive controller.

> **Stop!**
> If the supply voltage is too high, it may destroy the incremental encoder.

Under C0421 you can adjust the supply voltage V_{CC} (5 V) of the incremental encoder in order to compensate for the voltage drop along the incremental encoder cable (if required).

Calculation of the voltage drop

$\Delta U \approx l\,[m] \cdot \frac{R\,[\Omega]}{[m]} \cdot I_{Inc}\,[A]$	l	Length of the incremental encoder cable
	R	Resistance of the incremental encoder cable
	I_{Inc}	Current consumption of the incremental encoder

6.6.3 SinCos encoder at X8

SinCos encoders can be operated at X8. For the wiring diagram and the pin assignment of X8, please refer to chapter ”Wiring of the standard device” → ”Wiring of the feedback system”.

Activation

> **Stop!**
> **Uncontrolled acceleration of the motor!**
> ► If the SinCos encoder fails, the motor may accelerate in an uncontrolled manner.
> **Protective measures:**
> ► Activate the monitoring for the SinCos encoder with C0580 = 0.

► SinCos encoder with 5 V supply voltage:
C0025 = 210, 211, 212, or 213. The number of increments (512, 1024, 2048 or 4096) is set automatically.

► Single-turn SinCos encoder with 8 V supply voltage:
C0025 = 309, 310, or 311. The number of increments (128, 512 or 1024) is set automatically.

► Multi-turn SinCos encoder with 8 V supply voltage:
C0025 = 409, 410, or 411. The number of increments (128, 512 or 1024) is set automatically.

► Monitoring (SD8) of the SinCos encoder:
C0580 = 0 (TRIP, Lenze setting)
C0580 = 3 (off)

Adjustment

The SinCos encoder is supplied with voltage by the controller.

Stop!

If the supply voltage is too high, the SinCos encoder may be damaged.

Under C0421 you can adjust the supply voltage V_{CC} (5 ... 8 V) of the SinCos encoder in order to compensate for the voltage drop along the cable (if required).

Calculation of the voltage drop

$\Delta U \approx l\,[m] \cdot \frac{R\,[\Omega]}{[m]} \cdot I_{SINCOS}\,[A]$	l	Length of the SinCos encoder cable
	R	Resistance of the SinCos encoder cable
	I_{SINCOS}	Current consumption of the SinCos encoder

6.7 Current controller adjustment

When is a current controller adjustment required?

- ► The motor data of the motor used is not contained in GDC (e.g. motors from other manufacturers).
- ► The application makes high demands on the dynamic performance of the drive controller (e.g. dynamic positioning, cross cutter).
- ► The motor/drive controller combination does conform to the standard power-based assignment. The basic current controller settings only match for a power-based assignment of the drive controller.

Preparations

Measure	Setting	Explanation
Reduce maximum current	Reduce the value in C0022	With the motor at standstill, the motor current of the motor phase U is measured (field frequency 0). This increases the motor current in the motor phase to 141% and the motor temperature rises significantly.
Generate maximum torque setpoint	Connect MCTRL-M-ADD with FIXED100%	For speed control or position control (MCTRL-N/M-SWT = 0)
	● Connect MCTRL-M-ADD with FIXED100% ● Connect MCTRL-N-SET with FIXED100%	For torque control (MCTRL-N/M-SWT = 1)
Deactivate integral action component of current controller	Set C0076 = 2000 ms	The integral action component of the current controller is deactivated by setting the reset time T_n (C0076) to the longest time. The gain (C0075) remains unchanged (Lenze setting still valid).
Deactivate quick stop	Set X5/E1 = HIGH or X5/E2 = HIGH	By preselecting a direction of rotation the quick stop is deactivated.
Change the operation of the motor control	Set C0006 = 3	Even if an asynchronous motor is connected, set the motor control to 'synchronous motor'.
Set the rotor position setpoint	Set C0058 = -90°	Set the rotor displacement angle to -90°.
Set the actual value display of the rotor position to 0° under C0060	1. Select a TTL encoder under C0025 2. Save settings with C0003 = 1 3. If required, disconnect the encoder cable at X8 4. Switch off the mains supply and the external 24V supply (if required) and then on again.	After mains connection C0060 = 0° is displayed.
Connect the storage oscilloscope	Put the clamp-on ammeter around the motor phase U and connect it to the oscilloscope	Oscilloscope settings: ● Time base: 400 µs/DIV ● Auto-triggering

Adjustment

Stop!

Thermal destruction of the motor!

► If the controller is enabled for too long and the motor current is too high, the motor may be destroyed by overtemperature.

Protective measures:

► Reduce motor current under C0022 and enable the controller only for some seconds.

1. Inhibit the controller (X5/28 = LOW)
2. Deactivate quick stop (X5/E1 =HIGH or X5/E2 =HIGH)
3. Enable the controller for some seconds and then inhibit it again.
4. Record the current flowing in motor phase U with the controller being enabled.
5. Set the gain V_p (C0075) in such a way that the current rises rapidly.
6. Reduce the reset time T_n (C0076) so much that the transient response shows almost no overshoot and an optimum rise is achieved.
7. After each change of C0075 and C0076, the time course of the motor current must be recorded and checked again.

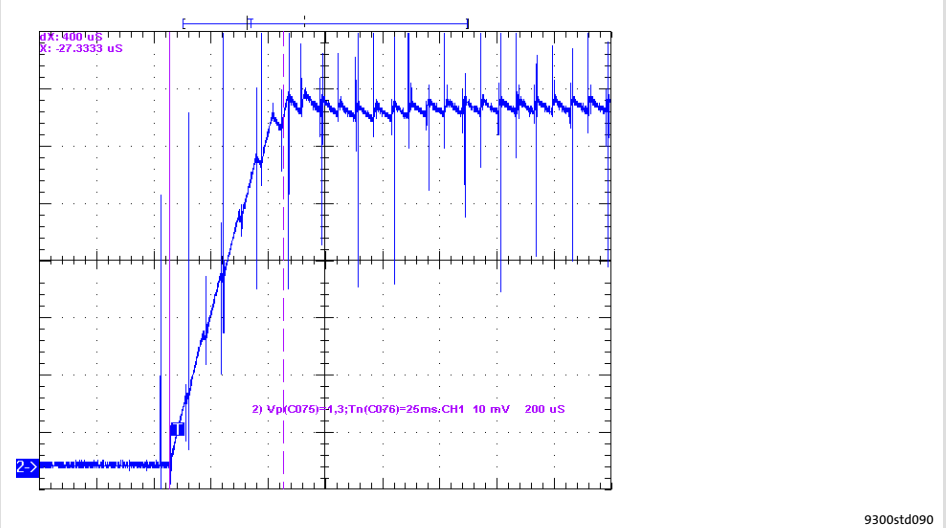

Fig. 6.7-1 Current characteristic for optimum controller adjustment

Time base 200 µs/DIV

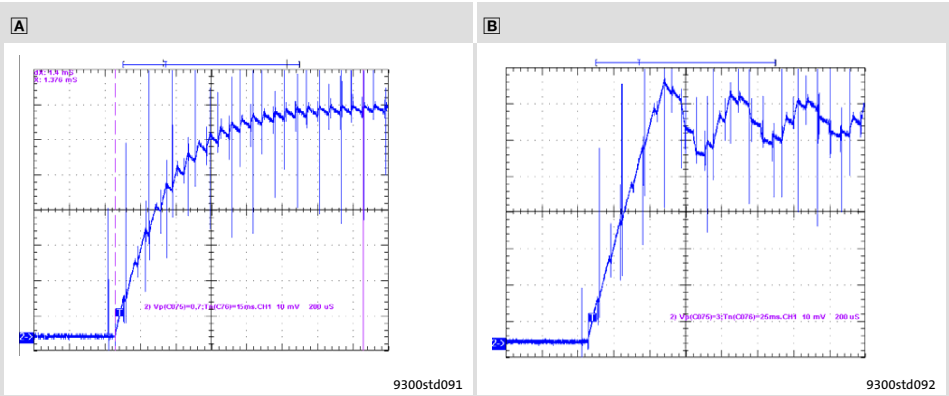

Fig. 6.7-2 Current characteristic for non-optimum controller adjustment

A Current rise of motor current too slow
Reset time T_n (C0076) too long and/or gain V_p (C0075) too small
Measured at time base 200 µs/DIV

B High-frequency oscillations of motor current, motor noises may occur
Reset time T_n (C0076) too short and/or gain V_p (C0075) too large
Measured at time base 200 µs/DIV

8. Check the transient response over a longer period of time (e.g. with time base 4000 µs/DIV). The motor current must reach the final steady-state value within the shortest possible time.

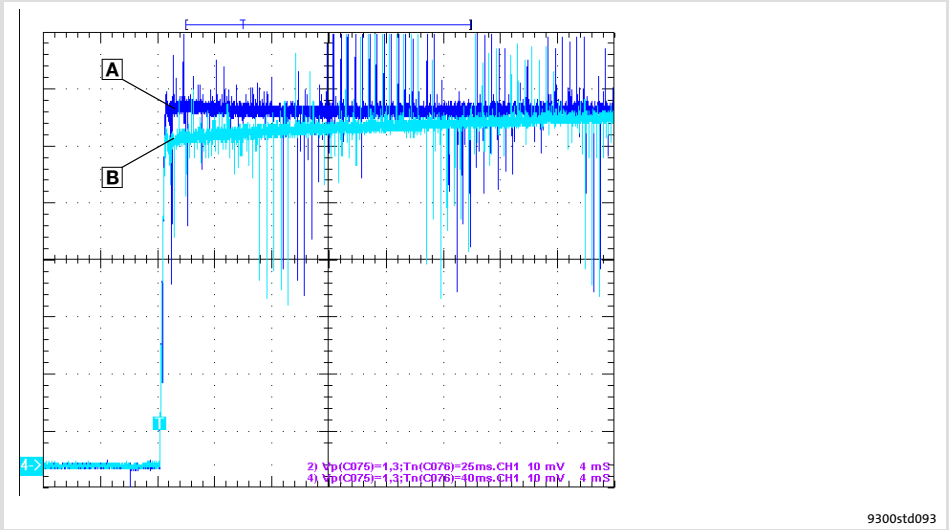

Fig. 6.7-3 Transient response of motor current over longer period of time

A Optimum transient response
B Final steady-state value is reached too slowly
Measured at time base 4000 µs/DIV

9. When the current controller adjustment is completed, reset the temporary settings:
   – Set the initial values again in C0006, C0022 and C0025. If necessary, reconnect the encoder cable to X8.
   – Connect the inputs MCTRL-M-ADD and MCTRL-N-SET with the initial signals.

6.8 Adjusting the rotor position

When is a rotor position adjustment required?

- ► A synchronous non-Lenze motor is used. The motor used is not included in GDC.
- ► Another encoder was mounted to the motor later on.
- ► A defective encoder was replaced.

Note!
Only use single-pole resolvers or SinCos encoders (single-turn or multi-turn).

Preparatory work

- ► Inhibit the controller.
- ► Unload the motor mechanically.
  - – Disconnect the motor from the gearbox/machine.
  - – If necessary, remove toothed lock washers, gears, etc. from the motor shaft.
  - – If necessary, support the holding torques provided by mounted motor brakes by means of locking devices.
- ► Deactivate the ”safe torque off” function so that the motor can be energised for the motor pole angle adjustment.
- ► Release the holding brake (if available).
- ► Adjust the current controller (see chapter ”Current controller adjustment”).
- ► Check resolver polarity.
- ► Set C0006 = 3.
  - – For carrying out a rotor position adjustment, a synchronous motor must be selected.

Resolver polarity check

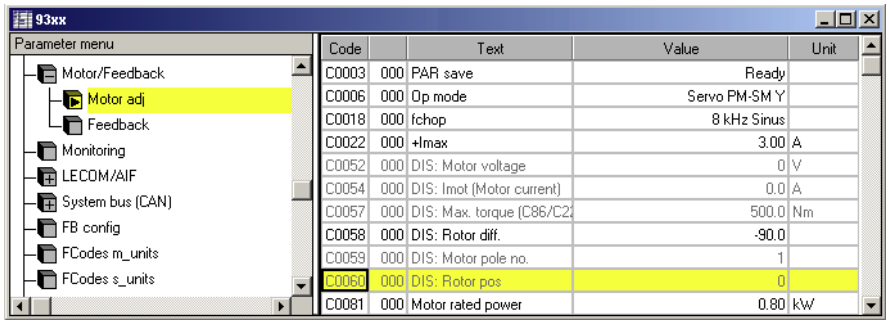

9300std200

Fig. 6.8-1 ”Motor adj” menu of the parameter menu

Procedure	
1.	Inhibit the controller (X5/28 = LOW).
2.	Disconnect the motor from the gearbox/machine.
3.	Open the ”Parameter menu → Motor/Feedback → Motor adj” menu.
4.	Turn the rotor to the right (when looking at the front end of the motor shaft). The value in C0060 must increase. ● In C0060 the angle of rotation is displayed as a numerical value between 0 and 2047. **Note!** The actual value is only displayed if the selection cursor is placed on the code and [F6] is pressed.
5.	If the value decreases, swap the signals at X7/6 and X7/7 (+SIN and -SIN).

Rotor position adjustment

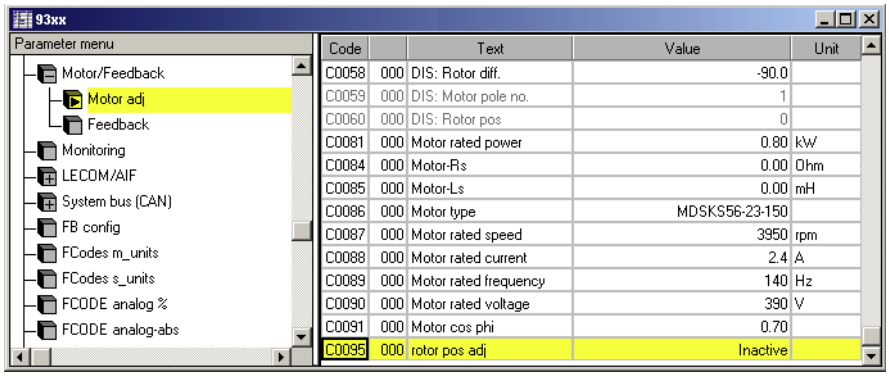

9300std203

Fig. 6.8-2 ”Motor adj” menu of the parameter menu

Procedure	
1.	Inhibit controller (X5/28 = LOW).
2.	Open the ”Parameter menu → Motor/feedback system → Motor setting” menu.
3.	Select C0006 = 3. ● A synchronous motor with feedback must be selected for pole position adjustment.
4.	Click C0095 and activate the adjustment process by selecting C0095 = 1.
5.	Enable controller (X5/28 = HIGH).
6.	The position adjustment program of the controller is started. ● The rotor rotates a full revolution in several steps. ● Then C0095 is automatically set to 0.
7.	C0058 displays the current rotor displacement angle. **Note!** ● The current value will not be displayed until the bar cursor is on the code and [F6] is pressed. ● For sin/cos encoders, C0058 always displays a value of 0 because the value is saved to the encoder.

Procedure	
8.	Inhibit controller (X5/28 = LOW).
9.	Reset C0006 to default setting if necessary.
10.	Click C0003 and save the setting by selecting C0003 = 1.
11.	Disconnect the mains and reconnect the motor to the machine.

Danger!

Uncontrolled movements of the drive after an ”Sd7” error in conjunction with absolute value encoders or in the case of a ”PL-TRIP” error.

If the rotor position adjustment was completed with an ”Sd7” or ”PL-TRIP” error (📖 9.3-1) it was not possible to assign the rotor position to the feedback system. In this case the drive may carry out uncontrolled movements after the controller has been enabled.

Possible consequences:

► Death or severe injuries.

► Destruction or damage to the machine.

Protective measures:

► Repeat rotor position adjustment (start with step 1).

► Check the wiring and the interference immunity of the encoder at X8.

6.9 Changing the assignment of the control terminals X5 and X6

Danger!

If you select a configuration in C0005, the signal assignment of the inputs and outputs will be overwritten with the corresponding basic assignment!

► Adapt the signal assignment to your wiring!

6.9.1 Free configuration of digital input signals

Description

► Internal digital signals can be freely linked with external digital signal sources. This serves to establish a freely configurable control of the drive controller.

– Digital inputs X5/E1 ... X5/E5

► A signal source can be linked with several targets. Ensure reasonable linkages for not activating functions that are mutually exclusive (e. g. linking a digital input with quick stop and DC injection braking at the same time).

Linking signals

The internal digital signal can be linked with an external signal source by entering the selection figure of the external signal into the configuration code of the internal digital signal.

Example

► C0787/2 =53 ⇨ signal source for JOG2 is terminal X5/E3

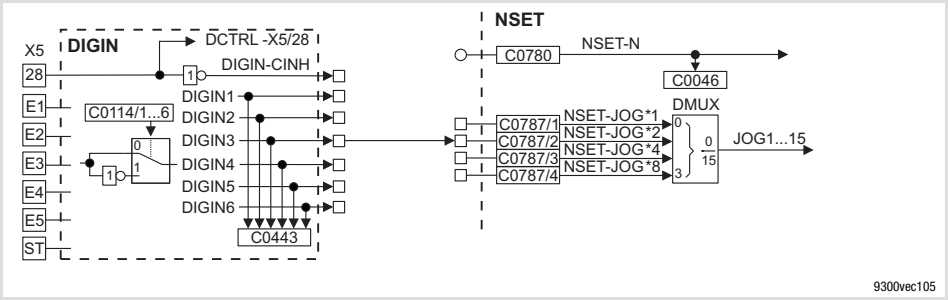

Fig. 6.9-1 Connecting digital signal JOG2 with terminal X5/E3

Tip!

► A list with all selection figures is included in the chapter ”Configuration” → ”Selection lists”.

► For signal linkage we recommend the function block editor in GDC (ESP-GDC2).

Signal level

► Terminals (X5/E1 ... X5/E5):
– HIGH = +12 V ... +30 V
– LOW = 0 V ... +3 V

► Response times: 1 ms

Inverting the signal level

In C0114 you can define the active signal level (HIGH level active or LOW level active) for the terminals X5/E1 ... X5/E5.

Example

► C0114/3 =1 ⇨ LOW level at X5/E3 activates JOG2

6.9.2 Free configuration of digital outputs

Description

► The digital outputs X5/A1 ... X5/A4 can be freely linked with internal digital signals.

► One signal source can be linked with several targets.

Linking signals

The digital outputs can be linked with internal digital signals by entering the selection figure of the internal signal into corresponding subcode of C0117.

Example

► C0117/2 = 505 ⇨ signal source for X5/A2 is the status message ”direction of rotation” (DCTRL-CW/CCW)

Signal level

► Terminals (X5/A1 ... X5/A4):
– HIGH = +12 V ... +30 V
– LOW = 0 V ... +3 V

► Response times: 1 ms

Inverting the signal level

In C0118 you can define the active signal level (HIGH level active or LOW level active) for the terminals X5/A1 ... X5/A4.

Example

► C0118/2 =1 ⇨ With LOW level at X5/A2 the motor rotates in CW direction (with in-phase motor connection)

6.9.3 Free configuration of analog input signals

Description

► Internal analog signals can be freely linked with external analog signal sources:
– Analog inputs X3/1, X3/2 and X3/3, X3/4

► One signal source can be linked with several targets.

Linking signals

The internal analog signals can be linked with an external signal source by entering the selection figure of the external signal into the configuration code of the internal analog signal.

Example

► C0780 = 50 ⇨ signal source for the main setpoint (NSET-N) is terminal X6/1, X6/2

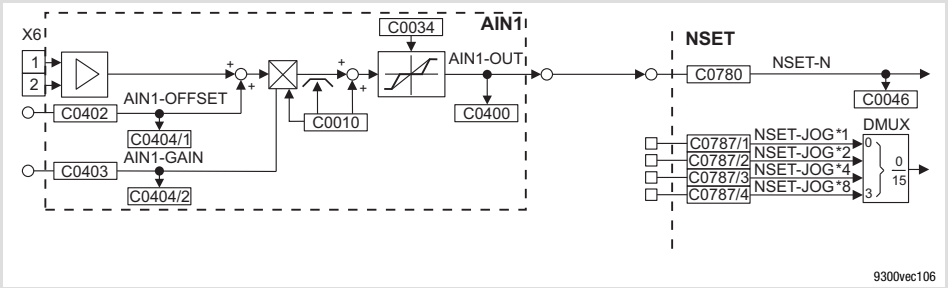

Fig. 6.9-2 Linking analog signal NSET-N with terminal X6/1, X6/2

Tip!

► A list with all selection figures is included in the chapter ”Configuration” → ”Selection lists”.

► For signal linkage we recommend the function block editor in GDC (ESP-GDC2).

Adjustment

Gain and offset

Set gain (C0027) and offset (C0026) to adapt the input signal to the application.

Input range of X6/1, X6/2

Input range	C0034	Position of jumper at X3
-10 V ... +10 V	C0034 = 0	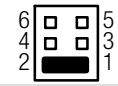
+4 mA ... +20 mA	C0034 = 1	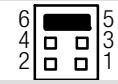
-20 mA ... +20 mA	C0034 = 2	

Note!

Different settings in C0034 and of X3 result in a wrong input signal.

6.9.4 Free configuration of analog outputs

Description

► The analog outputs (X6/62, X6/63) can be freely linked with internal analog process or monitoring signals. The controller outputs a voltage proportional to the internal signal at the analog outputs.

► One signal source can be linked with several targets.

Linking signals

Analog outputs can be linked with internal analog signals by entering the selection figure of the internal signal into the code of C0431 (AOUT1, X6/62) or C0436 (AOUT2, X6/63).

Example

► C0436 = 5006 ⇨ signal source for X6/63 is the actual motor voltage

Tip!

► A list with all selection figures is included in the chapter ”Configuration” → ”Selection lists”.

► For signal linkage we recommend the function block editor in GDC (ESP-GDC2).

Adjustment

Set gain (C0108) and offset (C0109) to adapt the output signal to the application.

With an internal signal of 100 % and a gain of 1, a voltage of 10 V is output at the terminal.

6.10 Manual control

6.10.1 Setting of manual control parameters

Stop!

Uncontrolled motor movement possible.

Incorrect settings in the configuration may cause uncontrolled movements.

Possible consequences:

► The machine is damaged or destroyed.

Protective measures:

► Select low values for the acceleration and speed in order to be able to reliably check the configuration.

► Select the Lenze setting. For most application cases it is sufficient.

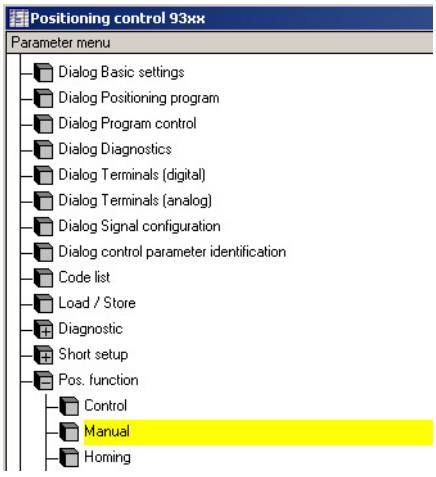

Fig. 6.10-1 ”Manual control” menu in the parameter menu

Procedure	
1.	Change to the parameter menu.
2.	Open the ”POS functions” menu.
3.	Open the ”Manual control” submenu.
4.	Click on code C1243 and enter a value for the manual control speed. ● Lenze setting: 5 % of v_{max}
5.	Click on code C1252 and enter a value for the manual control acceleration. ● Lenze setting: 10 % of a_{max}
6.	Click on code C0003 and save the settings (C0003 = 1).

6.10.2 Checking the configuration

Check a new or changed configuration in manual operation with regard to a faultless function.

Danger!

Uncontrolled motor movement possible.

Incorrect settings in the configuration may cause uncontrolled movements.

Possible consequences:

► Severe injuries to persons in or near the machine.

► The machine is damaged or destroyed.

Protective measures:

► Provide suitable emergency off equipment so that you are able to shut down the drive immediately.

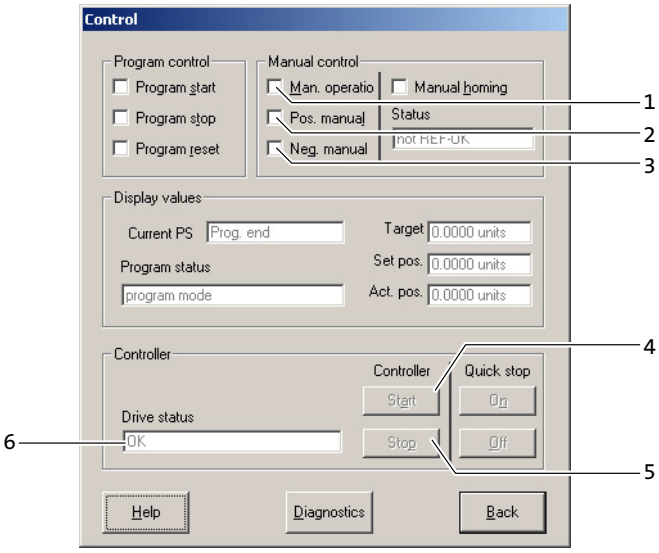

Fig. 6.10-2 ”Control” dialog box

Procedure	
1.	Activate ”Manual operation” (3).
2.	Click ”Start” (4) to enable the controller. ● If ”Ok” is displayed in the ”Drive diagnostics” field (5), controller enable can be executed. ● Controller inhibit must be deactivated (X5/28 = HIGH).
3.	Move the drive against the travel range limit switches, in order to check its function. ● ”Pos. manual” (2) or ”Neg. manual” (1) is activated: The drive traverses. ● ”Pos. manual” (2) or ”Neg. manual” (1) is deactivated: The drive stops.
A	Activate ”Pos. manual” (2). ● The drive traverses in the direction of the positive travel range limit switch.
B	Activate ”Neg. manual” (1). ● The drive traverses in the direction of the negative travel range limit switch.

Note!

- ► If the functions ”Pos. manual” and ”Neg. manual” are activated, the drive brakes with the max. acceleration (a-max) to standstill.
- ► The direction of rotation for the functions ”Pos. manual” and ”Neg. manual” can be changed by setting the ”Position polarity” field in the ”Basic settings” dialog box to ”Inverted”.
- ► You can only quit overtravelled limit switches by changing the traversing direction (”Pos. manual” or ”Neg. manual”).

6.11 Travel profile parameters

6.11.1 Description of the positioning program

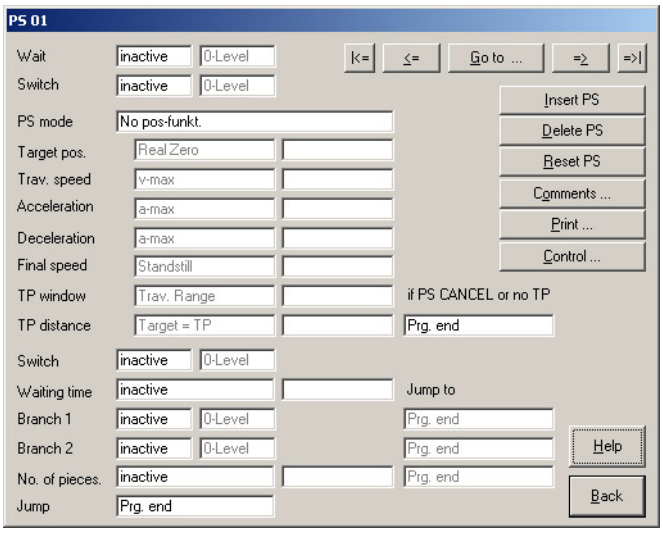

Fig. 6.11-1 ”Positioning program” dialog box

- ► The positioning program consists of max. 32 program sets (PS).
- ► The PS can be linked to a positioning program in an optional sequence.
- ► The PS determine the sequence of the positioning. The functions are processed within a PS according to a fixed sequence. (📖 6.11-6)

  These functions include:
  - – Type of positioning (relative or absolute positioning with or without touch probe)
  - – Speed profile of the positioning
  - – Access to data in the variable tables (VT).
  - – Response on external events via digital inputs (PFI)
  - – Processing of waiting times
  - – Repetition of number of pieces
  - – Output of control signals via digital outputs (PFO)
- ► Positioning is effected with the travel profile parameters. These parameters are included in the variable table (VT). The following VTs are available:
  - – VTPOS for the target position
  - – VTVEL for the traversing speed and final speed
  - – VTACC for the acceleration and deceleration
  - – VTPCS for the number of pieces or repeat function
  - – VTTIME for the waiting time

6.11.2 Structure of the travel profile

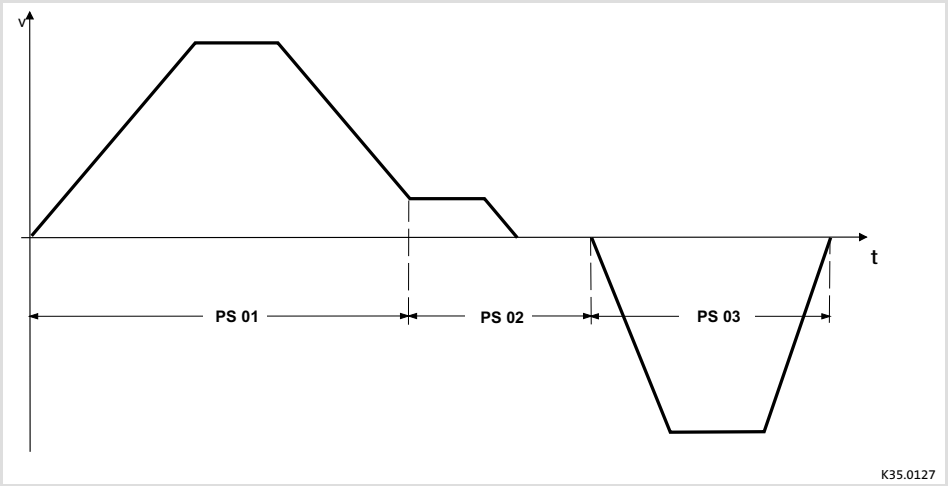

Fig. 6.11-2 Travel profile: Example of a point-to-point positioning

PS01, PS02, PS03	For the travel profile in Fig. 6.11-2 three program sets (PS) are required for entering all parameters.

- ► Create a travel profile of your drive task, e.g. as shown in Fig. 6.11-2 or Fig. 6.11-3.
- ► The parameter data for the travel profile are saved in program sets (PS).
- ► For more complex travel profiles, generate a positioning program with several PS (e.g. for different travelling speeds).
- ► The PS are parameterised in the ”Positioning program” dialog box.
  - – The sequence of the input is determined. (📖 6.11-4)
  - – Complex positioning processes are divided into individual sections (program sets).
- ► Every program set can be called up as often as required without further programming effort.
- ► A total of 32 program sets is available.

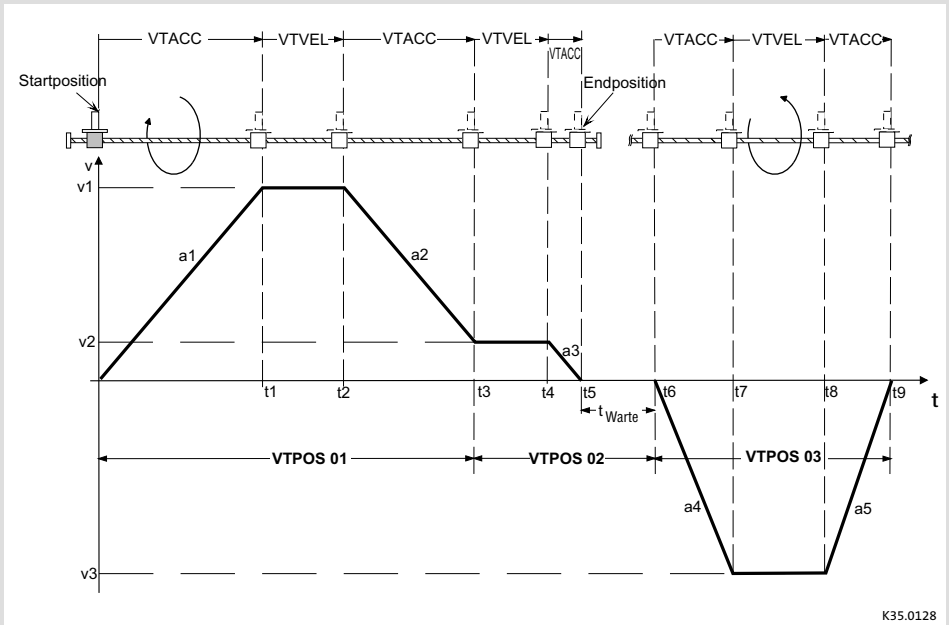

Fig. 6.11-3 Travel profile: Example of a point-to-point positioning with the PS required

Designation	Program set	Function
a1	PS01	Acceleration - forwards
t1	PS01	Time until v1 is reached
v1	PS01	Traversing speed - forwards
t2	PS01	Calculated time of braking to reach v2 in t3
a2	PS01	Deceleration 1 - forwards
t3	PS01	Start creeping with v2
v2	PS01, PS02	Final speed (PS01), traversing speed (PS02)
t4	PS02	Drive approaches position
a3	PS02	Deceleration 2 - forwards
t5	PS02	Position reached, then waiting time (e.g. processing of a workpiece)
t6	PS03	Start backward motion
a4	PS03	Acceleration - backwards
t7	PS03	Time until v3 is reached
v3	PS03	Traversing speed - backwards
t8	PS03	Time until a5 starts (calculated)
a5	PS03	Deceleration - backwards
t9	PS03	Time until the starting point is reached

6.11.3 Entering parameters

"Positioning program" dialog box

Click on the "Programming" button in the "Basic settings" dialog box.

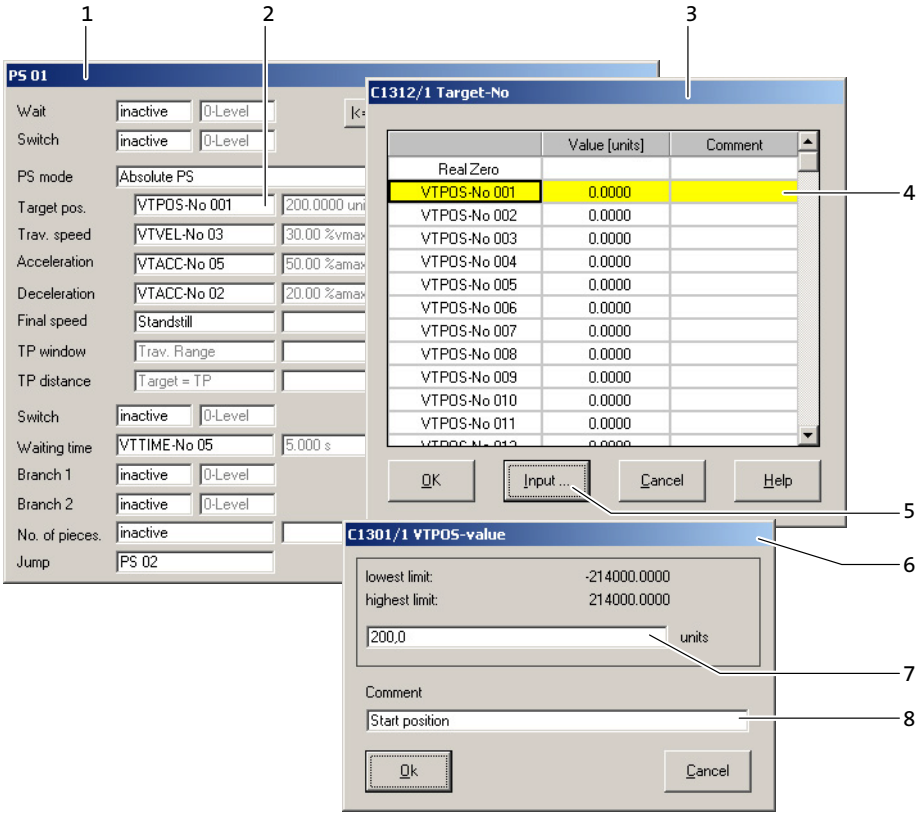

Fig. 6.11-4 "Positioning program" dialog box

Function		Description
1	"Positioning program" dialog box	Dialog box for entering the travel profile parameters for a PS and possible branches to further PS.
2, 3	Parameter field	Click on the field. Dialog box (3) for selecting a parameter is opened.
4, 5	Selection field	Selection of the parameter. Click on the desired field. For variable tables (VT) you can describe the table positions. For this, click on "Input" (5). Dialog box (6) opens for entering a parameter.
6	Dialog box for entering a parameter	Dialog box for entering a parameter in the variable table (see function 4, 5).
7	Input field	Entry of the desired parameter (see function 4, 5).
8		Description of the parameter, e.g. of the function for which it is required (see function 4, 5).

Editing tools

For entering the parameter data easily and quickly, the positioning program is provided with editing tools.

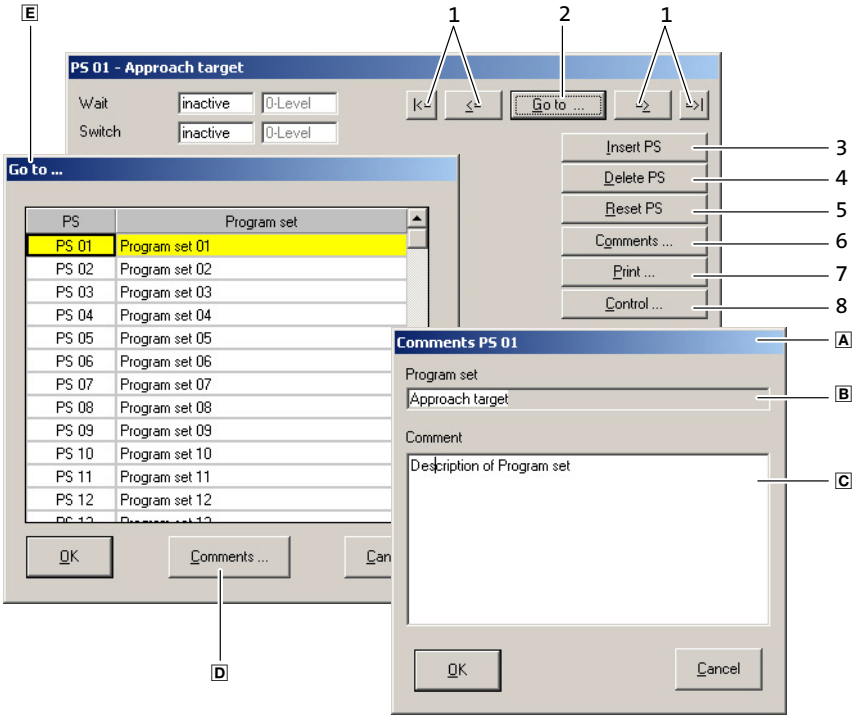

Fig. 6.11-5 ”Positioning program” dialog box

Function		Description
1	Browse PS	Select the previous or next program set or skip to the first or last program set.
2, E	Select PS	Click the ”Go to ...” button to open dialog box E. Select the PS for processing in the dialog box. Open the ”Documentation” dialog box for the PS selected, if required via the ”Documentation...” D button (see function 6).
3	Insert PS	Inserts a new PS at this position and shifts all following PS one position to the back. The last PS is deleted.
4	Delete PS	Deletes the current PS and shifts all following PS forwards by one position.
5	Reset PS	Resets all parameters of the current PS or of all PS to the default setting.
6, A, D	Write comments on the PS	Documentation of the current PS. In dialog box A, a name B can be assigned to the PS, and an explanatory text can be added as a comment C.
7	Print PS	Provide current or all PS to a printer.
8	Select ”Control” dialog box	Direct change to the ”Control” dialog box, e.g. to test modifications in manual operation. 📖 6.10-2)

Processing a program set

The following chart shows the processing of a program set (PS).

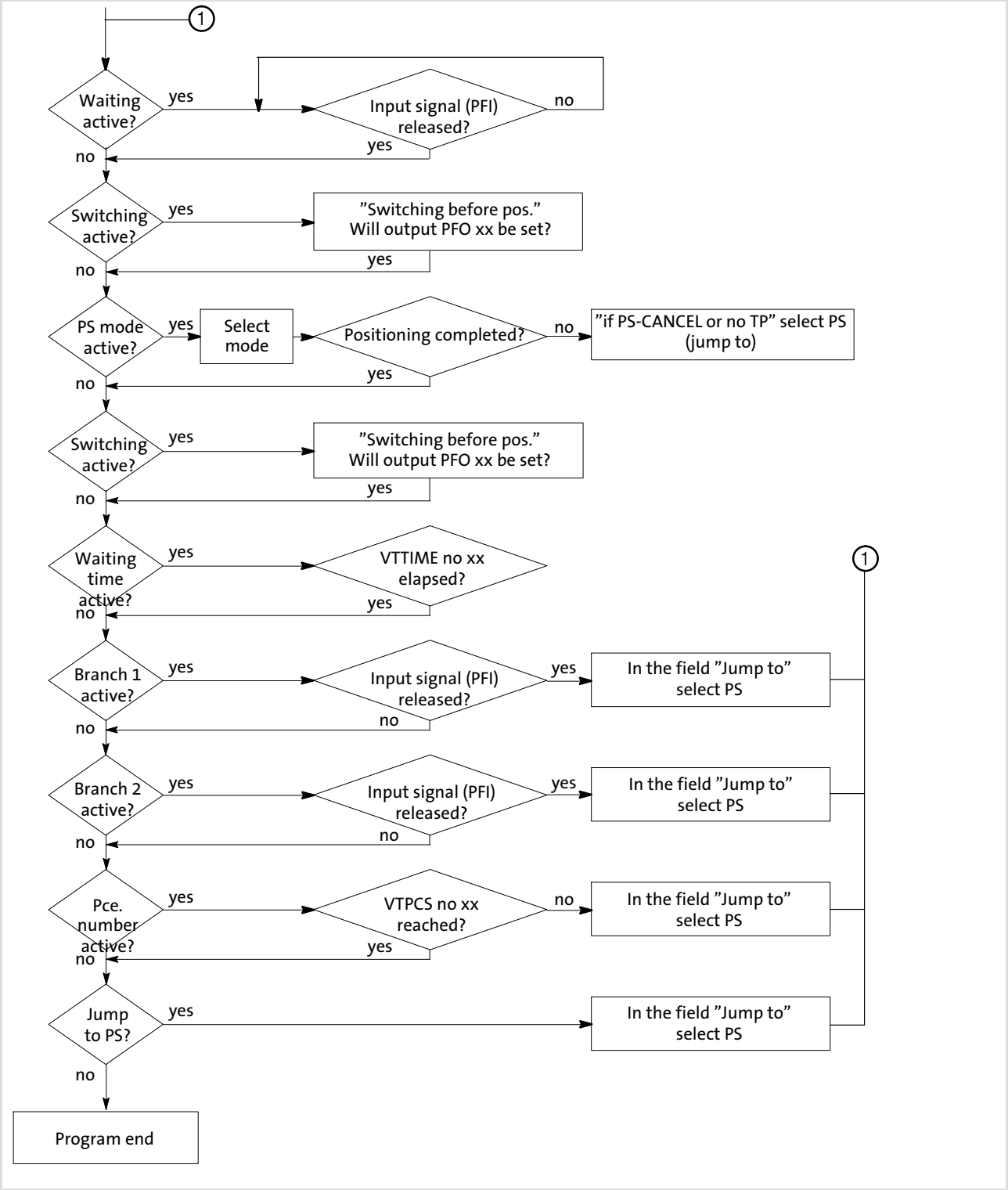

Fig. 6.11-6 Processing of a program set

Entering parameters

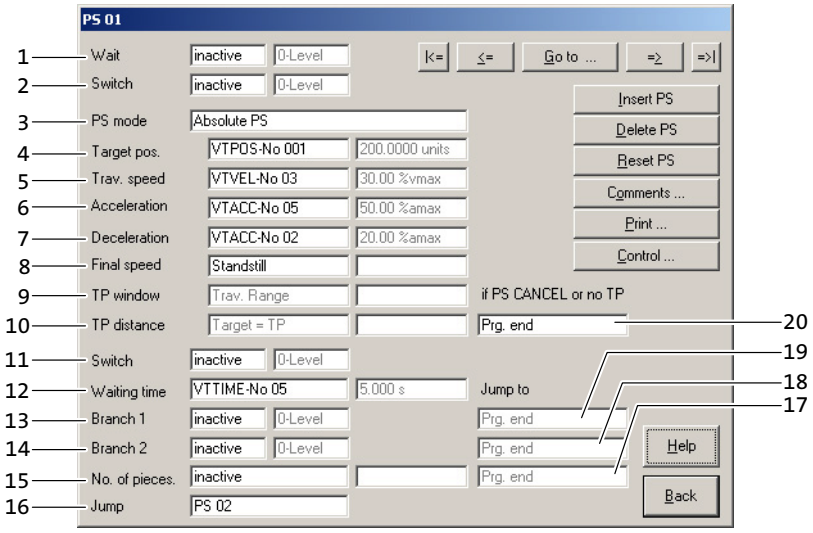

Fig. 6.11-7 ”Positioning program” dialog box

Function		Description
1	Inactive or no. of a PFI	Program function input (PFI). A digital input signal via an FB or terminal starts the PS processing. Possible signal levels: 0 or 1
2	Inactive or no. of a PFO	Program function output (PFO). A digital output signal indicates the state. Possible signal levels: 0 or 1
3	Type of positioning	e.g. absolute positioning, relative positioning, or special function (set reference).
4	Target position of VTPOS	Input of a target position from the variable table VTPOS.
5	Traversing speed from VTVEL	Input of a speed from the variable table VTVEL.
6	Acceleration from VTACC	Input of an acceleration from the variable table VTACC.
7	Deceleration from VTACC	Input of a deceleration from the variable table VTACC.
8	Final speed from VTVEL	Input of a speed from the variable table VIVEL or standstill.
9	TP window from VTPOS	Input of a position value from the variable table VTPOS.
10	TP residual path from VTPOS	Input of a position value from the variable table VTPOS. If there is no touch probe during a touch probe positioning, a branch/skip (”if PS CANCEL or no TP”) to a PS or program end is effected (see function 20).
11	Inactive or no. of a PFO	Program function output (PFO). A digital output signal indicates the state. Possible signal levels: 0 or 1
12	Inactive or time from VTTIME	Input of a waiting time from the variable table VTTIME until the next program function is processed.
13	Inactive or no. of a PFI	Program function input (PFI). If a digital input signal is applied during a request (via a FB or a terminal), a branch (”Jump to”) to a PS or to the program end is effected (see function 19). Possible signal levels: 0 or 1
14	Inactive or no. of a PFI	Program function input (PFI). If a digital input signal is applied during a request (via a FB or a terminal), a branch (”Jump to”) to a PS or to the program end is effected (see function 18). Possible signal levels: 0 or 1

Function		Description
15	Inactive or number from VTPCS	Input of a set quantity from the variable table VTPCS. If this quantity has not been reached, the program branches (”jump to”) to a PS or to the program end (see function 17).
16	Jump to the next PS or program end	Input of a PS or program end to which the program branches after the current PS has been processed.

6.12 Parameter set management

GDC provides different possibilities of loading or saving a parameter set.

6.12.1 Saving of parameter set

Save parameter set to a file

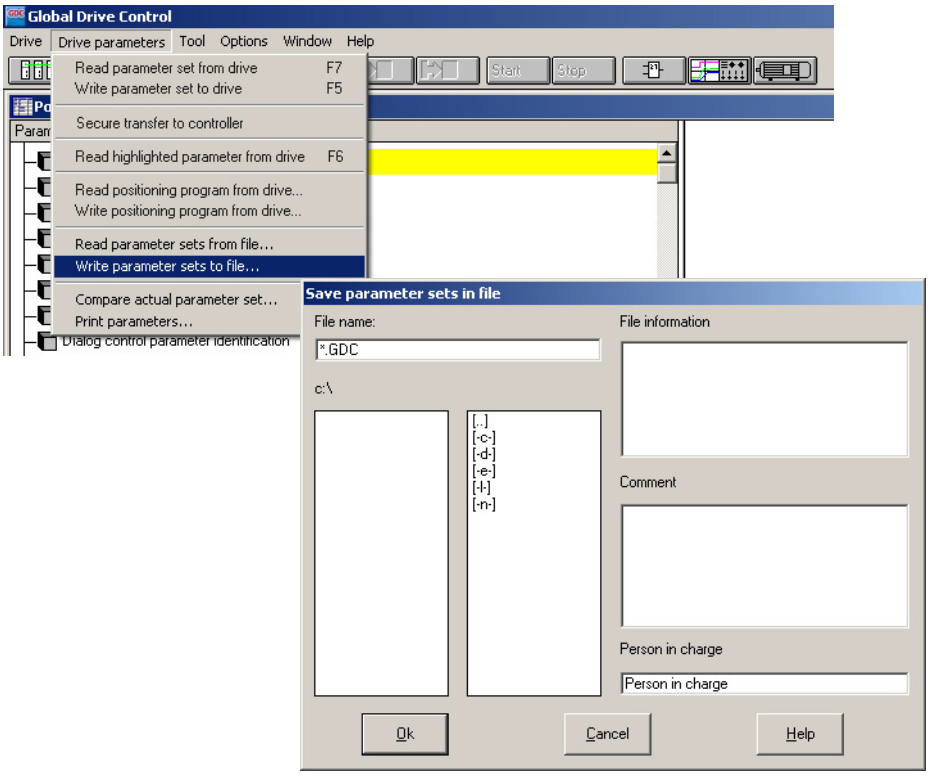

Fig. 6.12-1 Saving a parameter set to a file

How to save a parameter set in a file:

1. Execute **Drive parameters ➔ Save parameter sets in file...**.
2. Assign file name, select the drive and directory in which the parameter set is to be saved.
3. If required, document the parameter set in the ”Comment” field.
4. Confirm the entries with ”Ok”.
   – The parameter set is saved in a GDC file.

Save parameter set to the controller

A parameter set transfer can only be executed if controller inhibit is activated.

Danger!

Uncontrolled motor movement possible.

The controller is reinitialised by the parameter set transfer from the PC to the controller. System configurations and terminal assignments may be different.

Possible consequences:

► Severe injuries to persons in or near the machine.

► The machine is damaged or destroyed.

Protective measures:

► Make sure that your wiring and drive configuration comply with the settings of the parameter set.

► Use terminal X5/28 or the STOP function in GDC as the source for controller inhibit.

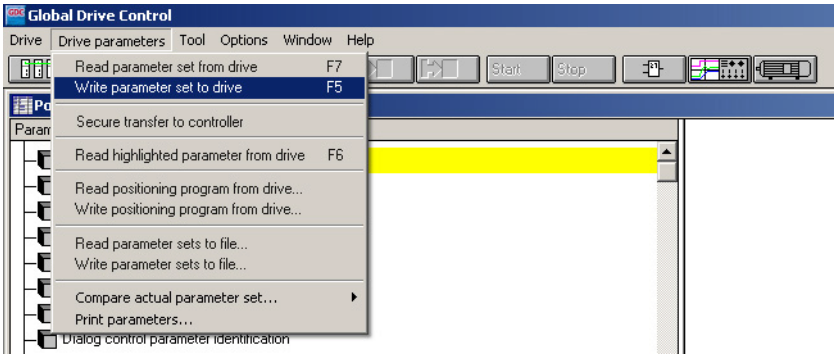

How to transfer a parameter set to the controller:

1. Execute **Drive parameters ➔ Write parameter set to drive**.
   – Alternatively the command can be executed via key ”F5”.
2. Open the ”Load / Save” menu in the parameter menu and save the parameter set safe against mains failure with C0003 = 1.

6.12.2 Loading a parameter set

Read parameter set from file

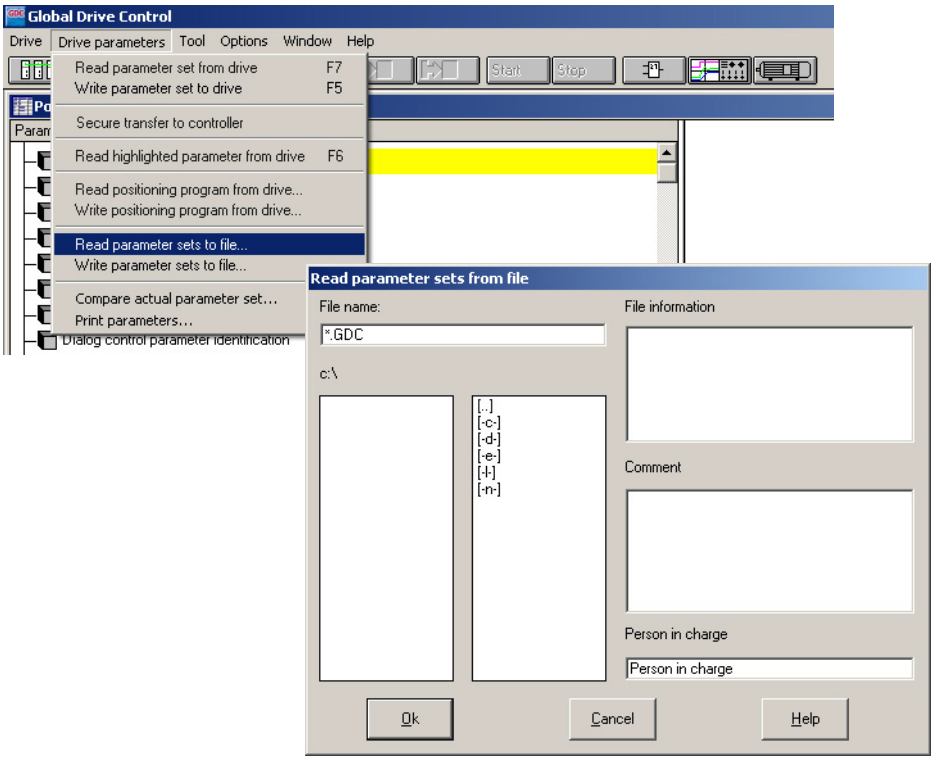

Fig. 6.12-2 Read parameter set from a file

How to open a parameter set from a file:

1. Execute **Drive parameters ➔ Read parameter sets from file...**.
2. Select the drive and directory in which the parameter set is stored.
3. Confirm the selection with ”Ok”.
   – The parameter set is opened in GDC.

Read parameter set from drive

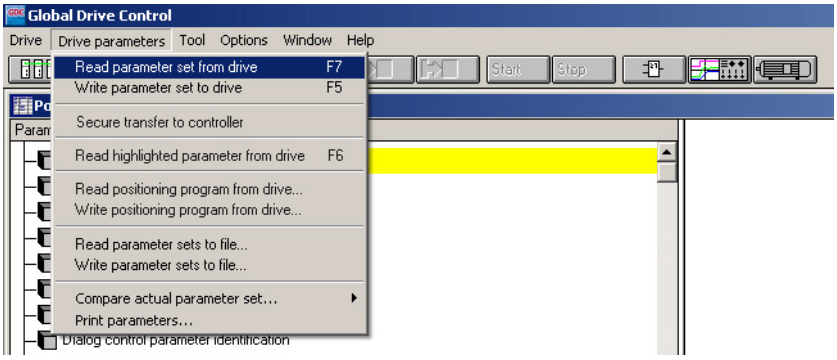

Fig. 6.12-3 Read parameter set from controller

How to read a parameter set from the controller:

1. Execute **Drive parameters ➔ Read parameter set from drive**.
   – Alternatively the command can be executed via key ”F7”.
2. Select the settings of the parameter set which are to be read in the parameter set management in C0002.
   – Load Lenze setting (C0002 = 0)
   – Load customised parameter set (C0002 = 1)
3. The parameter set is read from the controller and is loaded in GDC.
   – During the parameter set is loaded, the controller cannot be operated. The RDY message on the controller is inactive.

6.13 Homing

The reference of the motor revolution to the mechanics position gets lost when the controller is switched off. In order to reestablish this reference, a homing has to be carried out after switch-on.

6.13.1 Setting the homing parameters

Stop!

Uncontrolled, quick movements of the drive.

Incorrect settings in the configuration may cause impermissible movements of the drive.

Possible consequences:

► The machine is damaged or destroyed.

Protective measures:

► Select low values for the acceleration and speed in manual control in order to be able to reliably check the configuration.

► For instance use the Lenze setting. For most application cases it is sufficient.

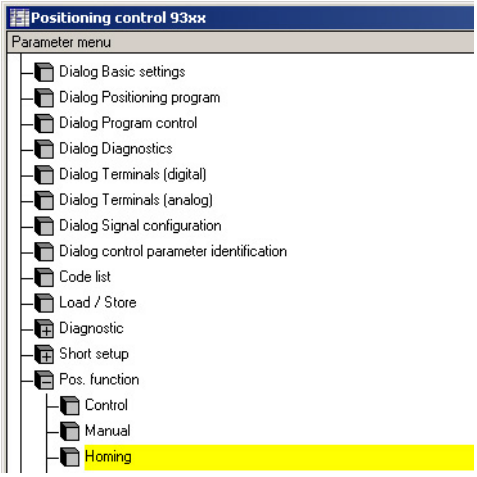

Fig. 6.13-1 ”Homing” menu in the parameter menu

Procedure	
1.	Change to the parameter menu.
2.	Open the ”POS functions” menu.
3.	Open the ”Homing” submenu.
4.	Click on code C1242 and enter a value for the homing speed. ● Lenze setting: 10 % of a_{max}
5.	Click on code C1251 and enter a value for the homing acceleration. ● Lenze setting: 10 % of a_{max}
6.	Click on code C1213 and select the homing mode. ● Mode ”Pos. via REF-MARK to home pos” (Lenze setting) – The drive moves in the positive direction towards the limit switch. ● Mode ”Neg. via REF-MARK to home pos” – The drive moves in the negative direction towards the limit switch.
7.	Click on code C0003 and save the settings (C0003 = 1).

6.13.2 Manual homing

The controller can only perform all positioning tasks exactly with a defined home position (zero point).

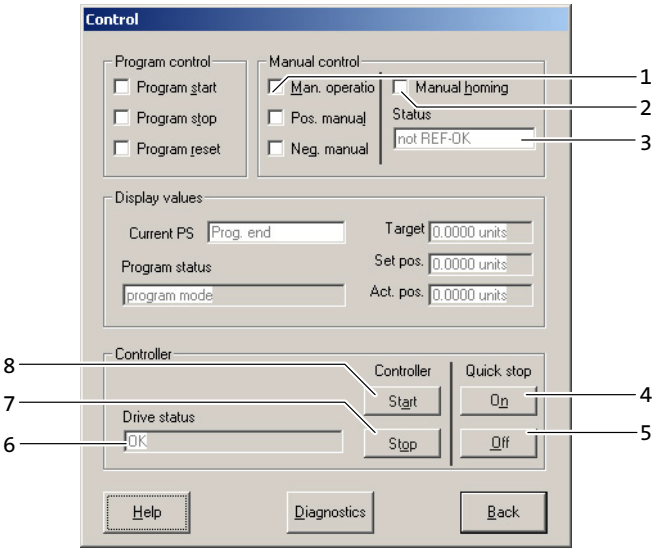

Fig. 6.13-2 ”Control” dialog box

Procedure	
1.	Click on the ”Control” button in the ”Basic settings” dialog box to open the ”Control” dialog box.
2.	Activate ”Manual operation” (1).
3.	Enable/inhibit the controller.
	A Click ”Start” (8) to enable the controller. ● If ”Ok” is displayed in the ”Drive diagnostics” field (5), enable can be executed. ● Controller inhibit must be deactivated (X5/28 = HIGH).
	B Click ”Stop” (7) to inhibit the controller.
4.	Overtravel homing switch. ● The drive traverses to the next zero position of the rotor and brakes to a standstill. This position is now considered to be the reference point for all positioning data. ● After the homing has been completed successfully, ”Reference ok” (3) is displayed, and X5/A4 is set to HIGH.
	A Activate ”Manual homing” (2). ● The drive traverses with the homing parameters set. (📖 6.13-1)
	B Deactivate ”Manual homing” (2). ● The drive stops.
5.	If required, stop the drive via quick stop (QSP).
	A Click ”On” (4). ● The drive is moved until standstill at the QSP deceleration ramp and is held with a standstill torque.
	B Click ”Off” (5). ● The drive is moved to setpoint speed at the QSP acceleration ramp.

6.14 Controlling the drive

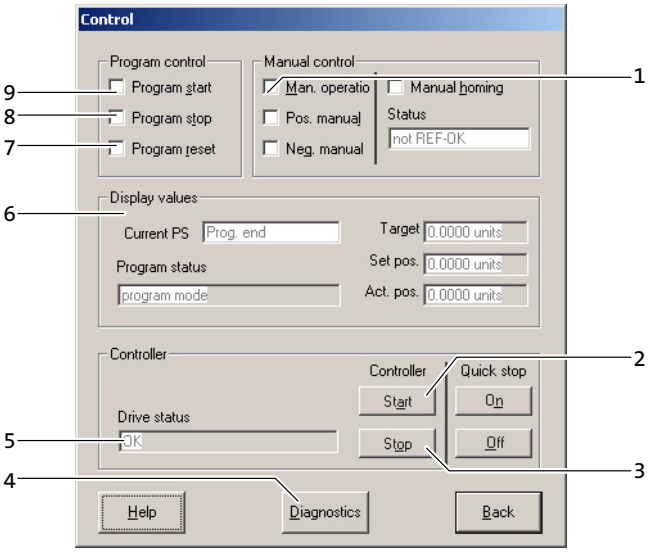

Fig. 6.14-1 ”Control” dialog box

Procedure	
1.	Click on the ”Control” button in the ”Basic settings” dialog box to open the ”Control” dialog box.
2.	Activate the program operation. ● Lenze setting: Set X5/E5 = HIGH. ● ”Manual operation” (1) must be deselected.
3.	Click ”Start” (4) to enable the controller. ● If ”Ok” is displayed in the ”Drive diagnostics” field (5), enable can be executed. ● Controller inhibit must be deactivated (X5/28 = HIGH).
4.	Control the drive. ● The ”Controller” field (6) shows the current positioning and the program status.
A	Select ”Program start” (9). ● The drive moves according to the loaded positioning profile.
B	Deselect ”Program start” (9) and select it again. ● The program restarts or is continued after an interruption (”Program stop”).
C	Select ”Program stop” (8). ● The program execution is interrupted. The drive stops.
D	Deselect ”Program stop” (8). ● The program execution can be continued with ”Program start”.
E	Select ”Program reset” (7). ● The program execution is aborted. The drive stops. The piece counter and all PFOs are reset. (📖 6.11-1)
F	Deselect ”Program reset” (7). ● The first PS with which the program is to start is loaded. ● The program can be restarted with ”Program start”.

Via the ”Control” dialog box you can start, stop, and reset the positioning program and read the current program status.

6.15 Automatic control parameter identification

6.15.1 Important notes

Stop!

- ► A control parameter identification can only be carried out if the drive is not exposed to external torques. In the event of overhauling loads, for instance, a motion must not be activated through the function.
- ► Release the brake (if mounted) before executing the control parameter identification.
- ► In order to comply with the number of revolutions, a brake resistor or a regenerative power supply unit and a constant moment of inertia are required.
  - – A major change to the Lenze setting in the ”Limitation” field (C1182 ... C1185) may cause deviations during the identification of the distance parameters and thus can cause deviations with regard to the controller setting.
- ► The motion to be carried out by the control parameter identification must be set in a way that even the slowest rotating element of the drive train is still moving significantly.

Requirements for the activation

- ► The controller has to be inhibited (X5/28 = LOW).
- ► The drive has to be at standstill.

Note!

If the requirements are not met, the control parameter identification is not executed and an error code is set.
(📖 6.15-4)

- ► In the case of a reactivation, the error is reset and the function is initialised.

6.15.2 Description

How to open the dialog box (device description, from version 8.0):

1. Open the ”short setup” menu.
2. Double-click the ”DIALOG control parameter identification”.

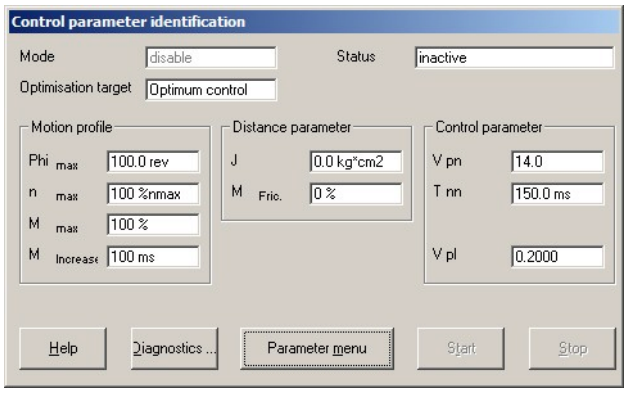

Fig. 6.15-1 “Control parameter identification” dialog box

Field	Description
Mode	Mode 0 (C1180 = 0): Not active ● The control parameter identification is reset to the initial state and is deactivated. Error messages are reset.
	Mode 1 (C1180 = 1): Calculate control parameters ● The control parameters for the speed and position controller are calculated according to the specifications in the ”Control parameters” field.
	Mode 2 (C1180 = 2): Identify J ● The plant parameters are identified automatically. ● A motion sequence of the drive is started. For this the controller has to be enabled (X5/28 = HIGH) after the activation, so that the drive can move. When the motion sequence has been completed, the controller has to be inhibited (X5/28 = LOW) to exit the function.
	Mode 3 (C1180 = 3): Identify & calculate ● The plant parameters are identified automatically. ● The control parameters for the speed and position controller are calculated according to the specifications in the ”Control parameters” field. ● A motion sequence of the drive is started. For this the controller has to be enabled (X5/28 = HIGH) after the activation, so that the drive can move. When the motion sequence has been completed, the controller has to be inhibited (X5/28 = LOW) to exit the function.
Optimisation target	Response to setpoint changes Response to failure
Status	Status display (C1181) ● The error messages serve to identify error causes during the control parameter identification. (📖 6.15-4)
Limitation	Selection of the limit values (C1182 ... C1185) for the motion sequence of the drive (modes 2 and 3). ● Major changes to the Lenze settings can cause deviations during the identification of the plant parameters and thus deviations of the controller setting.
Plant parameters	Selection of the plant parameters for mode 1. ● In the case of modes 2 and 3, the plant parameters are determined automatically.
Control parameters	Selection of the control parameters for modes 1 and 3. ● In the case of mode 2, no control parameters are determined.

6.15.3 Sequence diagram

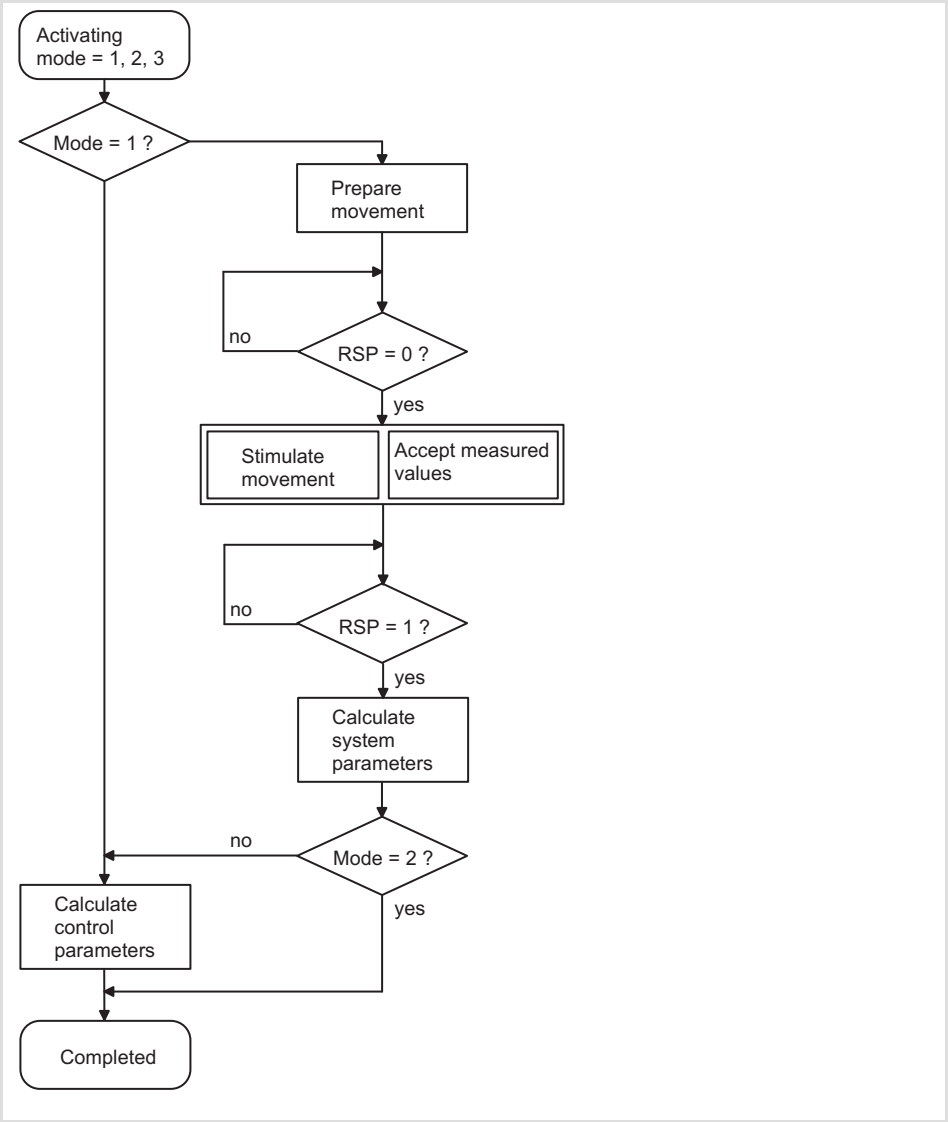

Fig. 6.15-2 Sequence of the control parameter identification

6.15.4 Troubleshooting

If an error occurs during the control parameter identification, you can determine the error cause via the ”Status” field or via C1181.

Error	C1181	Remedy
Control parameter calculation not possible.	2	Check whether plant parameters are set reasonably (C1187/C1188).
Too few scanning points registered.	3	Change basic motion conditions (C1182 ... C1185), i.e. increase torque, increase number of revolutions, increase speed, reduce torque rise time.
Reference torque too low	4	● Increase I_{max} (C0022) ● Check max. torque (C0057)
Speed at start ≠ 0	5	Stop drive and reactivate function
Controller inhibit set during motion sequence	6	Repeat control parameter identification.
Minimum braking torque not reached Torque ramp too flat, or max. torque too low.	7	Change basic motion conditions (C1182 ... C1185), i.e. increase torque, increase number of revolutions, increase speed, reduce torque rise time.
Time overflow	8	Select higher torque or shorter torque rise time.
Blocking of the drive	9	Release brake, check motor cable, eliminate mechanical blocking of the drive.

6.16 Commissioning examples

Example

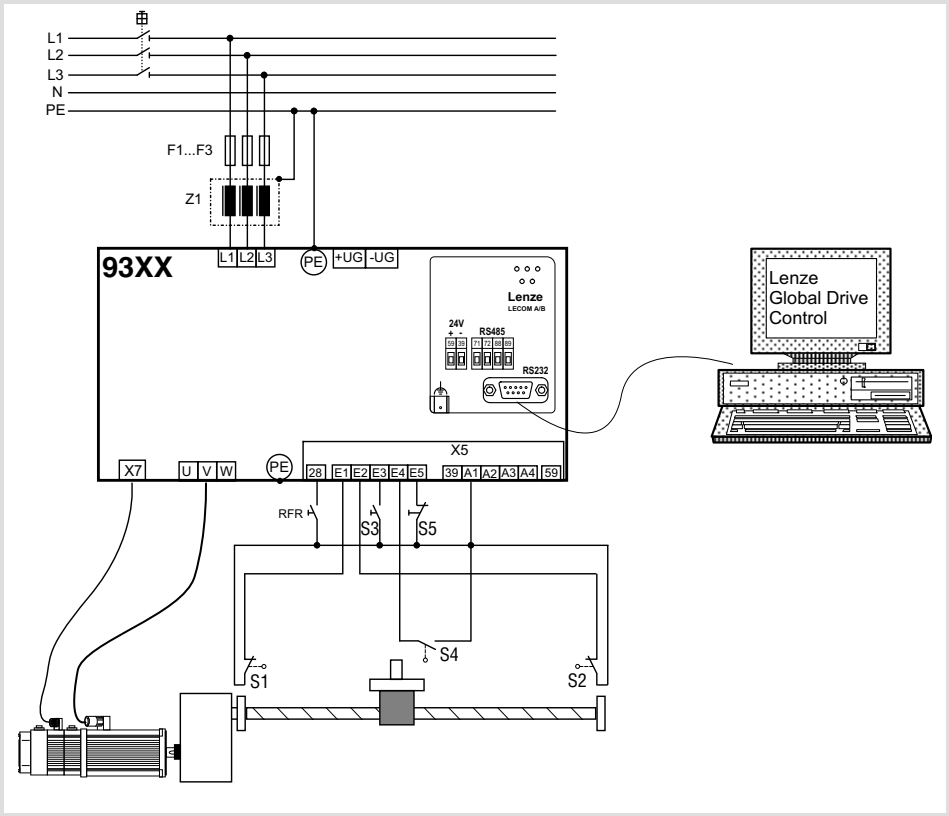

Fig. 6.16-1 Example of drive control with Lenze setting

S1	Limit switch for negative traversing direction (system protection)
S2	Limit switch for positive traversing direction (system protection)
S3	Start positioning program
S4	Home mark for reference run Tip: Set X5/E4 = HIGH if no home mark is available.
S5	Changeover from positioning operation to manual operation

Travel profile

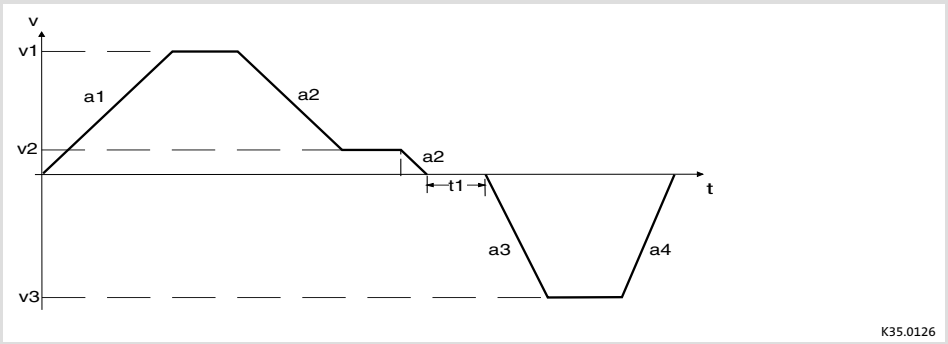

Fig. 6.16-2 Example of a travel profile

a1	Acceleration - forwards
v1	Traversing speed - forwards
a2	Deceleration - forwards
v2	Creeping for target approach
t1	Waiting time (e.g. processing of a workpiece)
a3	Acceleration - backwards
v3	Traversing speed - backwards
a4	Deceleration - backwards

Commissioning steps

The table shows the commissioning procedure of a positioning in short form, using the example in Fig. 6.16-1.

Section	Step	See also
Switch on controller	1. Inhibit controller (X5/28 = LOW). 2. Set X5/E1, X5/E2 to HIGH level. 3. Set X5/E3, X5/E4, X5/E5 to LOW level. 4. Switch on mains: – The controller is ready for operation after approx. 1 s (2 s for drives with SinCos encoder with serial interface).	🕮 6.3-1
Switch on PC	Start GDC on the PC – Set the communication parameters for the online mode in the "Current drive" dialog box. – Select the controller in the "Assign device description" dialog box.	
Carry out basic settings	1. Adapt the controller to the mains. 2. Adapt the controller to the motor. 3. Enter machine parameters.	🕮 6.5-1 🕮 6.5-3 🕮 6.5-2
Manual control	1. Enter parameters for manual control or use Lenze setting. 2. Carry out functional test with manual control.	🕮 6.10-1 🕮 6.10-2
Enter parameters for travel profile	1. Enter positioning data in the "Programming" dialog box. 2. Connect the X5 terminals in the "Terminal monitor 93XX (digital)" menu. – For internal voltage supply, assign "FIXED1" to X5/A1. Approx. 24 V are then output at X5/A1. **TIP!** For this application case, use a predefined configuration in C0005. C0005 = XXX1X automatically assigns FIXED1 to output X5/A1 (e.g. 20010 = absolute positioning with control via terminals).	🕮 6.11-1
Control drive	1. Check whether the controller is ready for operation: – When the green LED is blinking: Controller is ready for operation, proceed with step 2. – When the green LED is off and the red LED is blinking: A fault has occurred. Remove the fault before proceeding with the commissioning. 2. Enable controller (X5/28 = HIGH). – Green LED is lit when X5/28 is set to HIGH level and no other source of the controller inhibit is active. 3. For operation with a fieldbus module, additional settings are necessary (see Operating Instructions of the fieldbus module). The motor will now rotate according to the setpoint speed specified and the selected direction of rotation.	🕮 6.14-1 🕮 9-1

7 Parameter setting

Contents

7.1 Important notes 7.1-1
7.2 Parameter setting with the XT EMZ9371BC keypad 7.2-1
7.2.1 General data and operating conditions 7.2-1
7.2.2 Installation and commissioning 7.2-2
7.2.3 Display elements and function keys 7.2-2
7.2.4 Changing and saving parameters 7.2-4
7.2.5 Loading a parameter set 7.2-6
7.2.6 Transferring parameters to other standard devices 7.2-7
7.2.7 Activating password protection 7.2-9
7.2.8 Diagnostics 7.2-10
7.2.9 Menu structure 7.2-11

7.1 Important notes

Adapting the controller functions to the application

The controller functions can be adapted to your applications by means of parameterisation. You can either parameterise via keypad, PC or via the parameter channel of a bus system.

The function library contains a detailed description of the functions, the signal flow diagrams contain all configurable signals.

Parameters and codes

The parameters for the functions are stored in numbered codes:

► Codes are marked in the text with a ”C” (e.g. C0002).

► The code table provides a quick overview of all codes. The codes are sorted according to their numbers and can be used as reference. (📖 8.5-1)

Parameter setting via keypad

A quick parameter setting is provided by the keypad XT. Moreover, it serves as status display, error diagnosis and transfer of parameters to other drive controllers.

	Keypad XT EMZ9371BC
Can be used with	8200 vector, 8200 motec, starttec, Drive PLC, 9300 vector, 9300 servo
Operator buttons	8
Plain text display	yes
Menu structure	yes
Configurable menu (“user menu”)	yes
Predefined basic configurations	yes
Non-volatile memory for parameter transfer	yes
Password protection	yes
Diagnosis terminal	Keypad XT in handheld design, IP 20 (E82ZBBXC)
Installation in control cabinet	no
Type of protection	IP 20
Detailed description	📖 7.2-1

Parameter setting via PC

You need the parameter setting / operating software »Global Drive Control« (GDC) or »Global Drive Control easy« (GDC easy) and an interface for communication:

► Interface for system bus (CAN) (preset in GDC):
– PC system bus adapter

► Serial interface for LECOM:
– Communication module LECOM-A/B (RS232/RS485) EMF2102IB-V001

The parameter setting /operating software of the Global Drive Control family are easy-to-understand and tools for the operation, parameter setting and diagnostics or Lenze drive controllers.

	GDC easy ESP-GDC2-E	**GDC ESP-GDC2**
Supply	Free download from the internet at www.lenze.com	Program package must be charged for
Operation in interactive mode	yes	yes
Comprehensive help functions	yes	yes
Menu ”Short setup”	yes	yes
Monitor windows for displaying operating parameters and for diagnostic purposes	yes	yes
Saving and printing of parameter settings as code list	yes	yes
Loading of parameter files from the controller to the PC	yes	yes
Storing of parameter files from the PC in the controller	yes	yes
Function block editor	no	yes
Technology functions for 9300 Servo	no	yes
Oscilloscope function for 9300 Servo and 9300 vector	no	yes
Detailed description	Online help of the program	Online help of the program

Parameter setting via bus system

Detailed information can be found in the documentation of the corresponding bus system.

7.2 Parameter setting with the XT EMZ9371BC keypad

7.2.1 General data and operating conditions

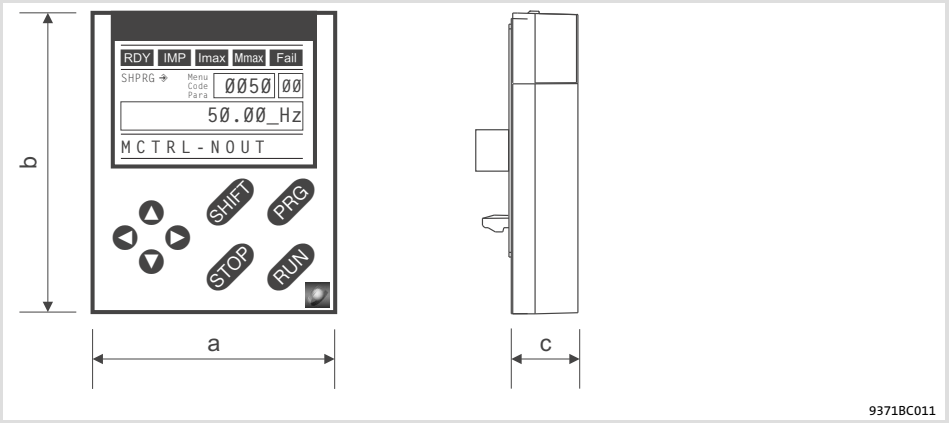

Feature		Values
Dimensions		
Width	a	60 mm
Height	b	73.5 mm
Depth	c	15 mm

Environmental conditions		
Climate		
Storage	IEC/EN 60721-3-1	1K3 (-25 ... +60 °C)
Transport	IEC/EN 60721-3-2	2K3 (-25 ... +70 °C)
Operation	IEC/EN 60721-3-3	3K3 (-10 ... +60 °C)

Enclosure	IP 20

7.2.2 Installation and commissioning

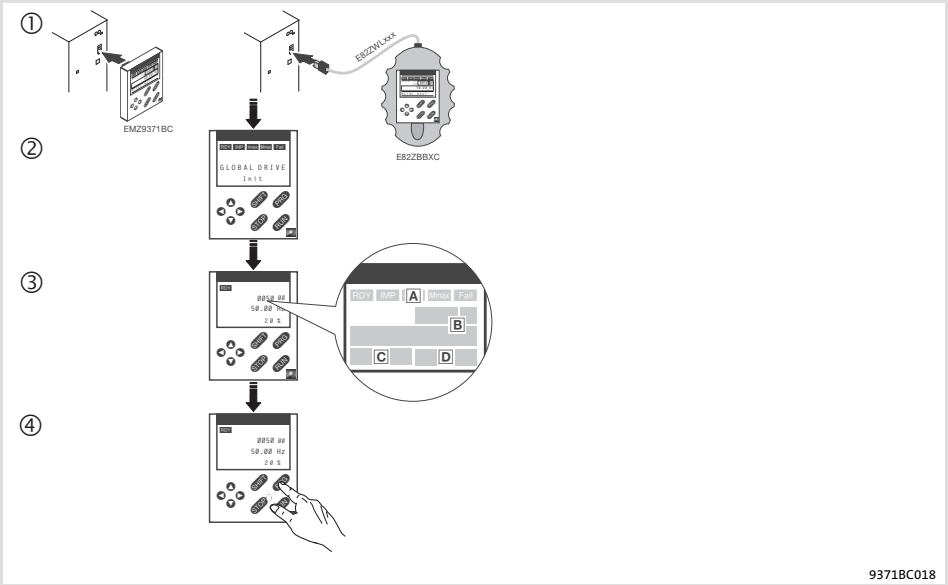

Fig. 7.2-1 Installation and commissioning of XT EMZ9371BC keypad or E82ZBBXC diagnosis terminal

① Connect keypad to the AIF interface on the front of the standard device.
The keypad can be connected/disconnected during operation.

② As soon as the keypad is supplied with voltage, it carries out a short self-test.

③ The operation level indicates when the keypad is ready for operation:

- A Current state of the standard device
- B Memory location 1 of the user menu (C0517):
  Code number, subcode number, and current value
- C Active fault message or additional status message
- D Actual value in % of the status display defined in C0004

④ PRG must be pressed to leave the operation level

7.2.3 Display elements and function keys

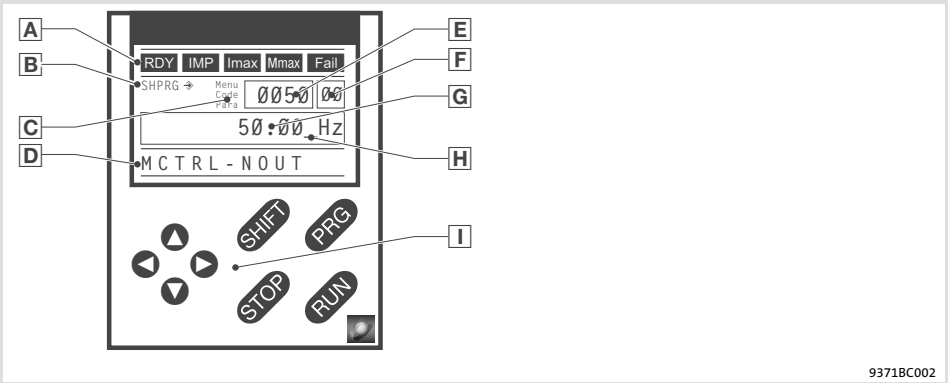

Fig. 7.2-2 Display elements and function keys of the XT EMZ9371BC keypad

Displays

A	Status displays of standard device		
	Display	**Meaning**	**Explanation**
	RDY	Ready for operation	
	IMP	Pulse inhibit is active	Power outputs are inhibited
	Imax	The set current limit is exceeded in motor or generator mode	

	Mmax	Speed controller 1 in the limitation	Drive is torque-controlled (Only active for operation with standard devices of the 9300 series)
	Fail	Active fault	
B	**Acceptance of the parameters**		
	Display	**Meaning**	**Explanation**
	⇥	Parameter is accepted immediately	Standard device operates immediately with the new parameter value
	SHPRG ⇥	Parameter must be acknowledged with SHIFT PRG	Standard device operates with the new parameter value after being acknowledged
	SHPRG	Parameter must be acknowledged in case of controller inhibit SHIFT PRG	Standard device operates with the new parameter value after the controller is enabled again
	None	Display parameter	Change is not possible
C	**Active level**		
	Display	**Meaning**	**Explanation**
	Menu	Menu level is active	Select main menu and submenus
	Code	Code level is active	Select codes and subcodes
	Para	Parameter level is active	Change parameters in the codes or subcodes
	None	Operating level is active	Display operating parameters
D	**Short text**		
	Display	**Meaning**	**Explanation**
	alphanumeric al	Contents of the menus, meaning of the codes and parameters	
		In the operating level display of C0004 in % and the active fault	
E	**Number**		
	Active level	**Meaning**	**Explanation**
	Menu level	Menu number	Display is only active for operation with standard devices of the 8200 vector or 8200 motec series
	Code level	Four-digit code number	
F	**Number**		
	Active level	**Meaning**	**Explanation**
	Menu level	Submenu number	Display is only active for operation with standard devices of the 8200 vector or 8200 motec series
	Code level	Two-digit subcode number	
G	**Parameter value**		
		Parameter value with unit	
H	**Cursor**		
		In the parameter level, the digit above the cursor can be directly changed	
I	**Function keys**		
		For description see the following table	

Function keys

Note!

Shortcuts with SHIFT:

Press and hold SHIFT, then press the second key in addition.

Key	Function			
	Menu level	Code level	Parameter level	Operating level
PRG		Change to the parameter level	Change to the operating level	Change to the code level
SHIFT PRG	Go to the "Short setup" menu and load predefined configurations [1]		Accept parameters when SHPRG ⇒ or SHPRG is displayed	
▲ ▼	Change between menu items	Change of code number	Change of digit via cursor	
SHIFT ▲ SHIFT ▼	Quick change between menu items	Quick change of code number	Quick change of digit via cursor	
▶ ◀	Change between main menu, submenu and code level		Cursor to the right Cursor to the left	
RUN	Deactivate the function of the key STOP, the LED in the key goes off			
STOP	Inhibit the controller, the LED in the key is lit.			
	Reset fault (TRIP-Reset):	1. Remove the cause of malfunction 2. Press STOP 3. Press RUN		

[1] Only active for operation with standard devices of the 8200 vector or 8200 motec series

7.2.4 Changing and saving parameters

Note!

Your settings have an effect on the current parameters in the main memory. You must save your settings in a parameter set so that they are not lost when the mains are connected.

If you only need one parameter set, save your settings as parameter set 1, since parameter set 1 is loaded automatically after mains connection.

Step			Key sequence	Action
1.	Select the menu		▲ ▼ ▶ ◀	Use the arrow keys to select the desired menu
2.	Change to the code level		▶	Display of the first code in the menu
3.	Select code or subcode		▼ ▲	Display of the current parameter value
4.	Change to the parameter level		PRG	
5.	When SHPRG is displayed, inhibit the controller		STOP [1]	The drive coasts
6.	Change parameter			
		A	▶ ◀	Move cursor below the digit to be changed
		B	▼ ▲	Change of digit

Step			Key sequence	Action
			SHIFT ▼ SHIFT ▲	Quick change of digit
7.	Accept the changed parameter			
	Display of SHPRG or SHPRG ⇨		SHIFT PRG	Confirm change to accept the parameter Display ”OK”
	Display ⇨		-	The parameter has been accepted immediately
8.	Enable the controller, if required		RUN [1]	The drive runs again
9.	Change to the code level			
		A	PRG	Display of the operating level
		B	PRG	Display of the code with changed parameter
10.	Change further parameters			Restart the ”loop” with step 1. or 3.
11.	Save changed parameters			
		A	▲ ▼ ▶ ◀	Select the code C0003 ”PAR SAVE” in the menu ”Load/Store”
		B	PRG	Change to the parameter level Display ”0” and ”READY”
	Select the parameter set in which the parameters are to be saved permanently	C	▲	Save as parameter set 1: ⇨ Set ”1” ”Save PS1”
				Save as parameter set 2: ⇨ Set ”2” ”Save PS2”
				Save as parameter set 3: ⇨ Set ”3” ”Save PS3”
				Save as parameter set 4: ⇨ Set ”4” ”Save PS4”
		D	SHIFT PRG	When ”OK” is displayed, the settings are permanently saved in the selected parameter set.
12.	Change to the code level			
		A	PRG	Display of the operating level
		B	PRG	Display of C0003 ”PAR SAVE”
13.	Set parameters for another parameter set			Restart the ”loop” with step 1. or 3.

[1] The function of the STOP key can be programmed:
C0469 = 1: Controller inhibit
C0469 = 2: Quick stop (Lenze setting)

7.2.5 Loading a parameter set

The keypad serves to load a saved parameter set into the main memory when the controller is inhibited. After the controller is enabled, it operates with the new parameters.

Danger!

- ► When a new parameter set is loaded, the controller is reinitialised and acts as if it had been connected to the mains:
  - – System configurations and terminal assignments can be changed. Make sure that your wiring and drive configuration comply with the settings of the parameter set.
- ► Only use terminal X5/28 as source for the controller inhibit! Otherwise the drive may start in an uncontrolled way when switching over to another parameter set.

Note!

- ► After switching on the supply voltage, the controller always loads parameter set 1 into the main memory.
- ► It is also possible to load other parameter sets into the main memory via the digital inputs or bus commands.

Step			Key sequence	Action
1.	Inhibit controller			Terminal X5/28 = LOW
2.	Load the saved parameter set into the main memory			
		A	▲ ▼ ► ◄	Select the code C0002 ”PAR LOAD” in the menu ”Load/Store”
		B	PRG	Change to the parameter level The active parameter set is displayed, e. g. display ”0” and ”Load Default” If you want to restore the delivery status, proceed with D
	Select the parameter set to be loaded	C	▲	Load parameter set 1: ⇨ Set ”1” ”Load PS1”
				Load parameter set 2: ⇨ Set ”2” ”Load PS2”
				Load parameter set 3: ⇨ Set ”3” ”Load PS3”
				Load parameter set 4: ⇨ Set ”4” ”Load PS4”
		D	SHIFT PRG	”RDY” goes off. The parameter set is loaded completely into the main memory if ”RDY” is displayed again.
3.	Change to the code level			
		A	PRG	Display of the operating level
		B	PRG	Display of C0002 ”PAR LOAD”
4.	Enable controller			Terminal X5/28 = HIGH The drive is running with the settings of the loaded parameter set

7.2.6 Transferring parameters to other standard devices

Parameter settings can be easily copied from one standard device to another by using the keypad.

For this purpose use the ”Load/Store” menu

Danger!

During the parameter transfer from the keypad to the standard device the control terminals can adopt undefined states!

Therefore the plugs X5 and X6 must be disconnected from the standard device before the transfer takes place. This ensures that the controller is inhibited and all control terminals have the defined state ”LOW”.

Copying parameter sets from the standard device into the keypad

Note!

After copying the parameter sets into the XT keypad (C0003 = 11), always the parameter set that was loaded last via C0002 is activated.

Like this the current parameters also remain active after copying:

► Save the current parameters in the parameter set before copying and load this parameter set in the controller via C0002.

Step			Key sequence	Action
1.	Connect the keypad to standard device 1			
2.	Inhibit controller			Terminal X5/28 = LOW The drive coasts.
3.	Select C0003 in the ”Load/Store” menu		▲ ▼ ► ◄	Select code C0003 ”PAR SAVE” in the ”Load/Store” menu using the arrow keys.
4.	Change to the parameter level		PRG	Display ”0” and ”READY”
5.	Copy all parameter set into the keypad			The settings saved in the keypad are overwritten.
			▲	Set ”11” ”Save extern”
6.	Start copying		SHIFT PRG	The ”RDY” status display goes off. As parameter value ”BUSY” is displayed. If ”BUSY” goes off after approx. one minute, all parameter sets were copied into the keypad. The ”RDY” status display is lit.
7.	Change to the code level			
		A	PRG	Display of the operating level
		B	PRG	Display C0003 and ”PAR SAVE”
8.	Enable controller			Terminal X5/28 = HIGH
9.	Remove keypad from standard device 1			

Copying parameter sets fom keypad into the standard device

Step		Key sequence	Action
1.	Connect the keypad to standard device 2		
2.	Inhibit controller		Terminal X5/28 = LOW The ”IMP” status display is it. The drive coasts
3.	Pull the plugs X5 and X6		All control terminals have the defined ”LOW” status.
4.	Select C0002 in the ”Load/Store” menu	▲ ▼ ▶ ◀	Select code C0002 ”PAR LOAD” in the ”Load/Store” menu using the arrow keys.
5.	Change to the parameter level	PRG	The active parameter set is shown, e. g. display ”0” and ”Load Default”
6.	Select the correct copy function		The settings saved in the standard device are overwritten.
	● Copy all parameter sets available into the EEPROM of the standard device and save them permanently.		● The parameter set that was active before copying is overwritten. ● The parameters are not yet active after copying. Select parameter set and load it in the main memory. 📖 7.2-6
		▲	Set ”20” ”ext -> EEPROM”
	● Copy individual parameter sets into the main memory of the standard device.		
		▲	Copy parameter set 1 into the main memory: Set ⇨ ”11” ”Load ext PS1”
			Copy parameter set 2 into the main memory: Set ⇨ ”12” ”Load ext PS2”
			Copy parameter set 3 into the main memory: Set ⇨ ”13” ”Load ext PS3”
			Copy parameter set 4 into the main memory: Set ⇨ ”14” ”Load ext PS4”
7.	Start copying	SHIFT PRG	The ”RDY” status display goes off. As parameter value ”BUSY” is displayed. If ”BUSY” goes off, the parameter sets selected were copied into the standard device. The ”RDY” status display is lit.
8.	Change to the code level		
	A	PRG	Display of the operating level
	B	PRG	Display C0002 and ”PAR LOAD”
9.	● If the function ”Copy all parameter sets into the EEPROM” (C0002 = 20) is selected, they might have to be loaded in the main memory manually. ● If the function ”Copy individual parameter sets into the main memory” (C0002 = 1x) is selected, they might have to be saved permanently in the EEPROM manually.	▲ ▼ ▶ ◀	Select code C0003 ”PAR SAVE” in the ”Load/Store” menu using the arrow keys and store the contents of the main memory permanently.
10.	Plug in plugs X5 and X6		
11.	Enable controller		Terminal X5/28 = HIGH The drive is running with the new settings.

7.2.7 Activating password protection

Note!

- ► If the password protection is activated (C0094 = 1 ... 9999), you only have free access to the user menu.
- ► To access the other menus, you must enter the password. By this, the password protection is annulled until you enter a new password.
- ► Please observe that the password-protected parameters can be overwritten as well when transferring the parameter sets to other standard devices. The password is not transferred.
- ► Do not forget your password! If you have forgotten your password, it can only be reset via a PC or a bus system!

Activate password protection

Step			Key sequence	Action
1.	Select the ”USER menu”		▲ ▼ ► ◄	Change to the user menu using the arrow keys
2.	Change to the code level		►	Display of code C0051 ”MCTRL-NACT”
3.	Select C0094		▲	Display of code C0094 ”Password”
4.	Change to the parameter level		PRG	Display ”0” = no password protection
5.	Set password			
		A	▲	Select password (1 ... 9999)
		B	SHIFT PRG	Confirm password
6.	Change to the code level			
		A	PRG	Display of the operating level
		B	PRG	Display of C0094 and ”Password”
7.	Change to the ”USER menu”		◄ ◄ ▼	

The password protection is active now.
You can only quit the user menu if you re-enter the password and confirm it with SHIFT PRG.

Remove password protection

Step			Key sequence	Action
1.	Change to the code level in the user menu		►	
2.	Select C0094		▲	Display of code C0094 ”Password”
3.	Change to the parameter level		PRG	Display ”9999” = password protection is active
4.	Enter password			
		A	▼	Set valid password
		B	SHIFT PRG	Confirm The password protection is deactivated by entering the password once again.
5.	Change to the code level			
		A	PRG	Display of the operating level
		B	PRG	Display of C0094 and ”Password”

The password protection is deactivated now. All menus can be freely accessed again.

7.2.8 Diagnostics

In the ”Diagnostic” menu the two submenus ”Actual info” and ”History” contain all codes for

► monitoring the drive

► fault/error diagnosis

In the operating level, more status messages are displayed. If several status messages are active, the message with the highest priority is displayed.

Priority	Display	Meaning	
1	GLOBAL DRIVE INIT	Initialisation or communication error between keypad and controller	
2	XXX - TRIP	Active TRIP (contents of C0168/1)	
3	XXX - MESSAGE	Active message (contents of C0168/1)	
4	Special device states:		
		Switch-on inhibit	
5	Source for controller inhibit (the value of C0004 is displayed simultaneously):		
	STP1	9300 servo:	Terminal X5/28
		ECSxS/P/M/A:	Terminal X6/SI1
	STP3	Operating module or LECOM A/B/LI	
	STP4	INTERBUS or PROFIBUS-DP	
	STP5	9300 servo, ECSxA/E:	System bus (CAN)
		ECSxS/P/M:	MotionBus (CAN)
	STP6	C0040	
6	Source for quick stop (QSP):		
	QSP-term-Ext	The MCTRL-QSP input of the MCTRL function block is on HIGH signal.	
	QSP-C0135	Operating module or LECOM A/B/LI	
	QSP-AIF	INTERBUS or PROFIBUS-DP	
	QSP-CAN	9300 servo, ECSxA:	System bus (CAN)
		ECSxS/P/M:	MotionBus (CAN)
7	XXX - WARNING	Active warning (contents of C0168/1)	
8	xxxx	Value below C0004	

7.2.9 Menu structure

For simple, user-friendly operation, the codes are clearly arranged in function-related menus:

Main menu	Submenus	Description
Display	Display	
User-Menu		**Codes defined in C0517**
Code list		**All available codes**
	ALL	All available codes listed in ascending order (C0001 ... C7999)
	PS 1	Codes in parameter set 1 (C0001 ... C1999)
	PS 2	Codes in parameter set 2 (C2001 ... C3999)
	PS 3	Codes in parameter set 3 (C4001 ... C5999)
	PS 4	Codes in parameter set 4 (C6001 ... C7999)
Load/Store		**Parameter set management** Parameter set transfer, restore delivery status
Diagnostic		**Diagnostic**
	Actual info	Display codes to monitor the drive
	History	Fault analysis with history buffer
Short setup		**Quick configuration of predefined applications** **Configuration of the user menu** The predefined applications depend on the type of the standard device (frequency inverter, servo inverter, position controller, ...)
Main FB		**Configuration of the main function blocks**
	NSET	Setpoint processing
	NSET-JOG	Fixed setpoints
	NSET-RAMP1	Ramp function generator
	MCTRL	Motor control
	DFSET	Digital frequency processing
	DCTRL	Internal control
Terminal I/O		**Connection of inputs and outputs with internal signals**
	AIN1 X6.1/2	Analog input 1
	AIN2 X6.3/4	Analog input 2
	AOUT1 X6.62	Analog output 1
	AOUT2 X6.63	Analog output 2
	DIGIN	Digital inputs
	DIGOUT	Digital outputs
	DFIN	Digital frequency input
	DFOUT	Digital frequency output
	State bus	State bus (not with 9300 frequency inverter)
Controller		**Configuration of internal control parameters**
	Speed	Speed controller
	Current	Current controller or torque controller
	Phase	Phase controller (not with 9300 frequency inverter)
Motor/Feedb.		**Input of motor data, configuration of speed feedback**
	Motor adj	Motor data
	Feedback	Configuration of feedback systems
Monitoring		**Configuration of monitoring functions**

Main menu	Submenus	Description
Display	**Display**	
LECOM/AIF		**Configuration of operation with communication modules**
	LECOM A/B	Serial interface
	AIF interface	Process data
	Status word	Display of status words
System bus		**Configuration of system bus (CAN)**
	Management	CAN communication parameters
	CAN-IN1	CAN object 1
	CAN-OUT1	
	CAN-IN2	CAN object 2
	CAN-OUT2	
	CAN-IN3	CAN object 3
	CAN-OUT3	
	Status word	Display of status words
	FDO	Free digital outputs
	Diagnostic	CAN diagnostic
FB config		**Configuration of function blocks**
Func blocks		**Parameterisation of function blocks** The submenus contain all available function blocks
FCODE		**Configuration of free codes**
Identify		**Identification**
	Drive	Software version of standard device
	Op Keypad	Software version of keypad

8 Configuration

Contents

8.1 Important notes 8.1-1
8.2 Monitoring 8.2-1
8.2.1 Fault responses 8.2-1
8.2.2 Setting of responses 8.2-2
8.2.3 Monitoring times for process data input objects 8.2-3
8.2.4 Maximum speed 8.2-4
8.2.5 Motor 8.2-4
8.2.6 Controller current load (I x t monitoring) 8.2-5
8.2.7 Motor temperature 8.2-6
8.2.8 Current load of motor (I2 x t monitoring: OC6, OC8) 8.2-7
8.2.9 Heatsink temperature 8.2-10
8.2.10 DC-bus voltage 8.2-11
8.2.11 External error (EEr) 8.2-11
8.3 Overview of monitoring functions 8.31
8.4 Code table 8.5-1
8.5 Basic configurations 8.5-1
8.6 Selection lists 8.6-1
8.6.1 Selection list 1: Analog output signals 8.6-1
8.6.2 Selection list 2: Digital output signals 8.6-3
8.6.3 Selection list 3: Angle signals 8.6-8
8.6.4 Selection list 4: Speed signals 8.6-9
8.6.5 Selection list 5: Function blocks 8.6-10
8.6.6 Selection list 10: Error messages 8.6-12
8.7 Table of attributes 8.7-1

8.1 Important notes

The chapter ”Configuration” consists of two parts.

System Manual

Contents of the chapter ”Configuration” in the System Manual:

- ► Monitoring
- ► Monitoring functions
- ► Code table
- ► Selection lists
- ► Table of attributes

System Manual (Extension)

Contents of the chapter ”Configuration” in the System Manual (Extension):

- ► Configuring with Global Drive Control (GDC)
- ► Basic configurations
- ► Operating modes

8.2 Monitoring

Different monitoring functions (📖 8.31) protect the drive system from impermissible operating conditions.

If a monitoring function responds,

► the set fault response is triggered to protect the drive and

► the fault message is entered position 1 in the fault history buffer (C0168/x, in case of ECSxP: C4168/x) (📖 9.2-1).

8.2.1 Fault responses

Depending on the failure, one or more of the following responses are possible:

Response	Effects on the drive and the controller		Danger warnings
TRIP (highest priority)	● Switches the power outputs U, V, W to a high resistance until TRIP is reset. ● The drive coasts (no control!). ● After TRIP reset, the drive accelerates to its setpoint on the ramps set.		
Message	Switches the power outputs U, V, W to a high resistance as long as the message is active.		**Danger!** The drive restarts automatically when the message is not pending anymore.
	● Short-term message ≤ 0.5 s	The drive coasts (no control!) as long as the message is active. When the message is not pending anymore, the drive accelerates to its setpoint with maximum torque.	
	● Longer message > 0.5 s	The drive coasts (due to internal controller inhibit) as long as the message is active. If required, restart the drive.	
FAIL-QSP	If a fault occurs, the drive brakes to standstill within the quick stop deceleration time (C0105).		
Warning	● Only display of the failure. ● The drive continues to operate in a controlled manner.		**Stop!** As these responses have no effect on the drive behaviour, the drive can be destroyed.
Off	● No response on failures! Monitoring is deactivated.		

8.2.2 Setting of responses

► Open the **Diagnostics** dialog box in the parameter menu.

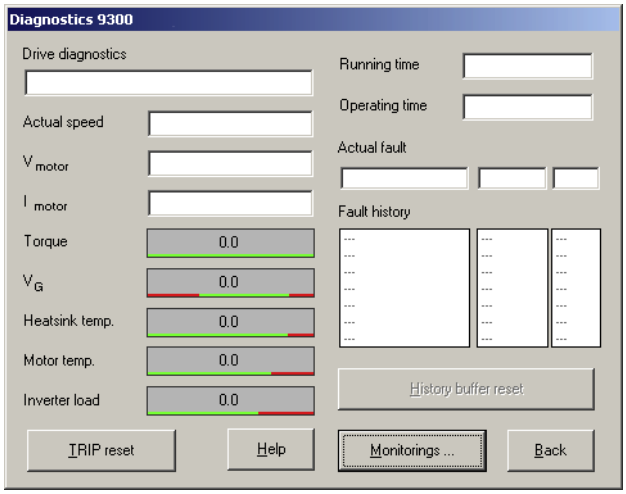

9300std230

Fig. 8.2-1 ”Diagnostics” dialog box

► Click on the ”Monitorings” button.

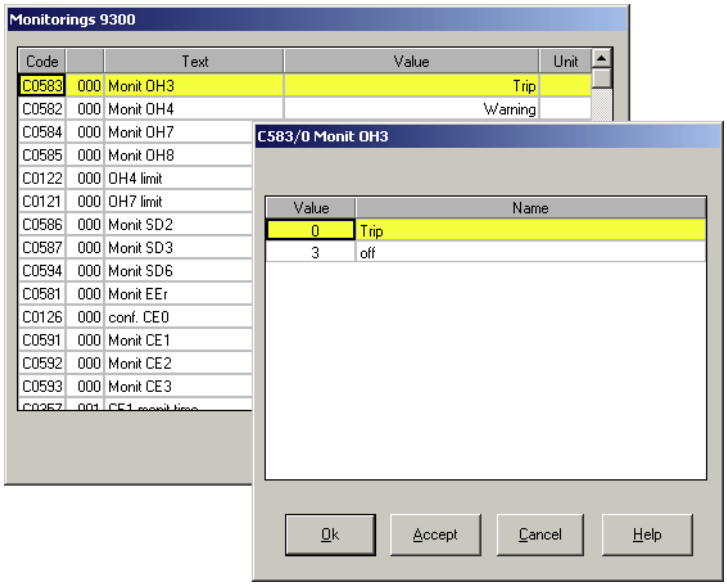

9300std233

Fig. 8.2-2 ”Monitorings” dialog box

1. Click on a monitoring option. The configuration dialog box opens.
2. Select the desired response and confirm with ”OK”.

8.2.3 Monitoring times for process data input objects

Each process data input object can monitor whether a telegram has been received within a time set. As soon as a telegram arrives, the corresponding monitoring time (C0357) is restarted (”retriggerable monoflop” function).

The following assignments are valid:

Setting the response to the monitoring:

► C0591 for CAN1_IN (”CE1”)

► C0592 for CAN2_IN (”CE2”)

► C0593 for CAN3_IN (”CE3”)

The following can be set:

► 0 = error (TRIP) - controller sets controller inhibit (CINH)

► 2 = warning

► 3 = monitoring is switched off

You can also use the signals as binary output signals, e. g. for the assignment of the output terminal.

Bus off

If the controller disconnects from the CAN bus due to faulty telegrams, the ”BusOffState” (CE4) signal is set.

”BusOffState” can trigger an error (TRIP) or warning (like CE1, CE2, CE3). You can also switch the signal off. The response is set via C0595. You can also assign the terminal output.

Reset node

Changes with regard to the baud rates, the CAN node addresses, or the addresses of process data objects are only valid after a reset node.

The reset node can be effected by:

► A reconnection of the low-voltage supply

► Reset node via the bus system

► Reset node via C0358

8.2.4 Maximum speed

Stop!

Destruction of the drive!

► If the fault is triggered, the drive is without torque.

► In the event of an actual speed value encoder failure it is not guaranteed that the monitoring responds.

Protective measures:

► Use a mechanical brake if necessary.

► Special, system-specific measures are to be taken.

The NMAX fault is triggered if the system speed (MCTRL-NACT)

► exceeds the value set under C0596 or

► exceeds the maximum speed n_{max} (C0011) by twice the max. speed value.

A fault initiates TRIP NMAX. Other responses cannot be set.

8.2.5 Motor

Overcurrent in the motor cable (OC1)

Fault OC1 is triggered if the motor current exceeds the 2.25-fold rated controller current.

If a fault occurs, TRIP OC1 is triggered. Other responses cannot be set.

Earth fault in the motor cable (OC2)

The OC2 fault is triggered if

► the motor has a short circuit to the frame,

► one of the phases has a short circuit to the shield,

► one of the phases has a short circuit to PE,

► the capacitive charging current of the motor cable is too high.

A fault initiates TRIP OC2. Other responses cannot be set.

Failure of a motor phase (LP1)

If a current-carrying motor phase fails, a motor winding is broken or the current limit value set in C0599 is too high, the LP1 fault is triggered.

The monitoring is not appropriate for field frequencies > 480 Hz and when synchronous servo motors are used. Deactivate the monitoring at these conditions.

The response to exceeding the thresholds can be set under C0597.

Note!

The monitoring can only be activated if the function block MLP1 is entered in the processing table (C0465).

8.2.6 Controller current load (I x t monitoring)

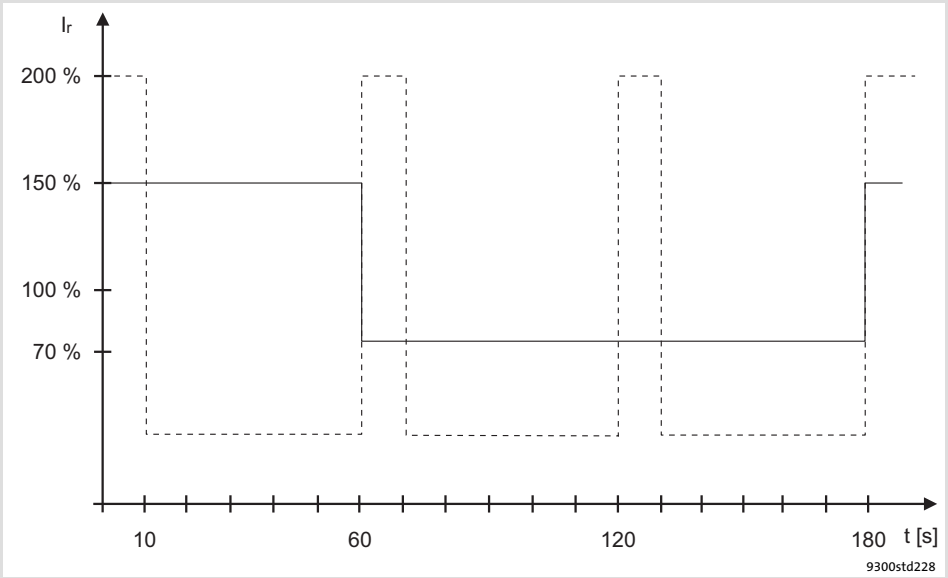

Fig. 8.2-3 I × t diagram

I_r	Device output current
———	100 % continuous thermal current at C0022 ≤ 1.5 I_r
- - - - - -	70 % continuous thermal current at C0022 > 1.5 I_r

The I × t monitoring monitors the current load of the controller. The current load is calculated from the mean value of the motor current over the acquisition period of 180 s.

The monitoring is set in such a way that the following operation modes are possible:

► Continuously with device output current = I_r.

► ≤ 60 s with device output current ≤ 1.5 x I_r.

A fault initiates TRIP OC5. Other responses cannot be set.

8.2.7 Motor temperature

KTY at X7 or X8

The motor temperature is monitored by means of a KTY. Connect the thermal sensor to the resolver cable at X7 or the encoder cable at X8.

► Warning threshold (OH7) can be set via C0121
  – The switch-on point is 5 °C below the threshold set.

► Fixed warning threshold (OH3) = 150 °C
  – The switch-on point is 135 °C.

The response for the case when the thresholds are exceeded can be defined in:

► C0584 (adjustable threshold)

► C0583 (fixed threshold)

Stop!

With the setting C0583 = 3, monitoring is deactivated. The motor temperature in C0063 shows 0 °C, even if C0584 = 2 (warning) is set.

Monitoring of the KTY at X7 or X8

The SD6 fault is triggered if there is a short or open circuit between X7/8 and X7/9 or X8/5 and X8/8.

The response can be set under C0594.

PTC thermistor or thermal contact (NC contact) at T1, T2

The motor temperature is monitored with a PTC thermistor or thermal contact. Wire the temperature sensor to T1, T2.

► Fixed warning threshold (OH8)
  – The switch-off threshold and the hysteresis depend on the temperature sensor (DIN 44081).

The response to exceeding the threshold can be set under C0585.

Stop!

Motor could be destroyed!

► If the responses ”Warning” or ”Off” are set, the motor could be destroyed by overload.

Protective measure:

► Set the response ”TRIP”.

8.2.8 Current load of motor (I^2 x t monitoring: OC6, OC8)

From software version 8.0 onwards, the 9300 controllers are provided with an I^2xt function for sensorless thermal monitoring of the connected motor.

Note!

- ► I^2 x t monitoring is based on a mathematical model which calculates a thermal motor load from the detected motor currents.
- ► The calculated motor load is saved when the mains is switched.
- ► The function is UL-certified, i.e. no additional protective measures are required for the motor in UL-approved systems.
- ► However, I^2 x t monitoring is **no** full motor protection as other influences on the motor load could not be detected as for instance changed cooling conditions (e.g. interrupted or too warm cooling air flow).

Die I^2 x t load of the motor is displayed in C0066.

The thermal loading capacity of the motor is expressed by the thermal motor time constant (τ, C0128). Find the value in the rated motor data or contact the manufacturer of the motor.

The I^2 x t monitoring has been designed such that it will be activated after 179 s in the event of a motor with a thermal motor time constant of 5 minutes (Lenze setting C0128), a motor current of 1.5 x I_N and a trigger threshold of 100 %.

Two adjustable trigger thresholds provide for different responses.

► Adjustable response OC8 (TRIP, warning, off).
- – The trigger threshold is set in C0127.
- – The response is set in C0606.
- – The response OC8, for instance, can be used for an advance warning.

► Fixed response OC6-TRIP.
- – The trigger threshold is set in C0120.

Behaviour of the I^2 x t monitoring	Condition
The I^2 x t monitoring is deactivated. C0066 is set = 0 % and MCTRL-LOAD-I2XT is set = 0.00 %.	When C0120 = 0 % and C0127 = 0 %, set controller inhibit.
I^2 x t monitoring is stopped. The current value in C0066 and at the MCTRL-LOAD-I2XT output is frozen.	When C0120 = 0 % and C0127 = 0 %, set controller enable.
I^2 x t monitoring is deactivated. The motor load is displayed in C0066.	Set C0606 = 3 (off) and C0127 > 0 %.

Note!

An error message OC6 or OC8 can only be reset if the I^2 x t load falls below the set trigger threshold by 5 %.

8.2.8.1 Forced ventilated or naturally ventilated motors

Parameter setting

The following codes can be set for I^2 x t monitoring:

Code	Meaning	Value range	Lenze setting
C0066	Display of the I^2 x t load of the motor	0 ... 250 %	-
C0120	Threshold: Triggering of error "OC6"	0 ... 120 %	0 %
C0127	Threshold: Triggering of error "OC8"	0 ... 120 %	0 %
C0128	Thermal motor time constant	0.1 ... 50.0 min	5.0 min
C0606	Response to error "OC8"	TRIP, warning, off	Warning

Calculate release time and I^2xt load

Formula for release time	Information	
$t = -(\tau) \times \ln\left(1 - \frac{z+1}{\left(\frac{I_{Mot}}{I_N}\right)^2 \times 100}\right)$	I_{Mot}	Actual motor current (C0054)
	I_r	Rated motor current (C0088)
	τ	Thermal motor time constant (C0128)
	z	Threshold value in C0120 (OC6) <u>or</u> C0127 (OC8)

Formulae for I^2 x t load	Information	
$L(t) = \left(\frac{I_{Mot}}{I_N}\right)^2 \times 100\% \times \left(1 - e^{\frac{-t}{\tau}}\right)$	L(t)	Chronological sequence of the I^2 x t load of the motor (Display: C0066)
	I_{Mot}	Actual motor current (C0054)
	Ir	Rated motor current (C0088)
	τ	Thermal motor time constant (C0128)
If the controller is inhibited, the I^2 x t load is reduced:		
$L(t) = L_{Start} \times \sqrt{e^{-\frac{t}{\tau}}}$	L_{Start}	I^2 x t load before controller inhibit If an error is triggered, the value corresponds to the threshold value set in C0120 (OC6) <u>or</u> C0127 (OC8).

Read release time in the diagram

Diagram for detecting the release times for a motor with a thermal motor time constant of 5 minutes (Lenze setting C0128):

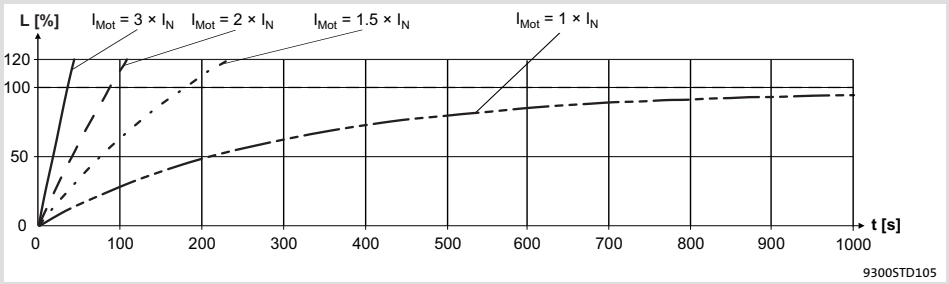

Fig. 8.2-4 I^2 × t-monitoring: Release times for different motor currents and trigger thresholds

I_{Mot} Actual motor current (C0054)
I_r Rated motor current (C0088)
L I^2 x t load of the motor (display: C0066)
T Time

8.2.8.2 Self-ventilated motors

Due to the construction, self-ventilated standard motors are exposed to an increased heat generation in the lower speed range compared to forced ventilated motors.

Warnings!

For complying with the UL 508C standard, you have to set the speed-dependent evaluation of the permissible torque via code **C0129/x**.

Parameter setting

The following codes can be set for I^2 x t monitoring:

Code	Meaning	Value range	Lenze setting
C0066	Display of the I^2 x t load of the motor	0 ... 250 %	-
C0120	Threshold: Triggering of error "OC6"	0 ... 120 %	0 %
C0127	Threshold: Triggering of error "OC8"	0 ... 120 %	0 %
C0128	Thermal motor time constant	0.1 ... 50.0 min	5.0 min
C0606	Response to error "OC8"	TRIP, warning, off	Warning
C0129/1	S1 torque characteristic I_1/I_{rated}	10 ... 200 %	100 %
C0129/2	S1 torque characteristics n_2/n_{rated}	10 ... 200 %	40 %

Effect of code C0129/x

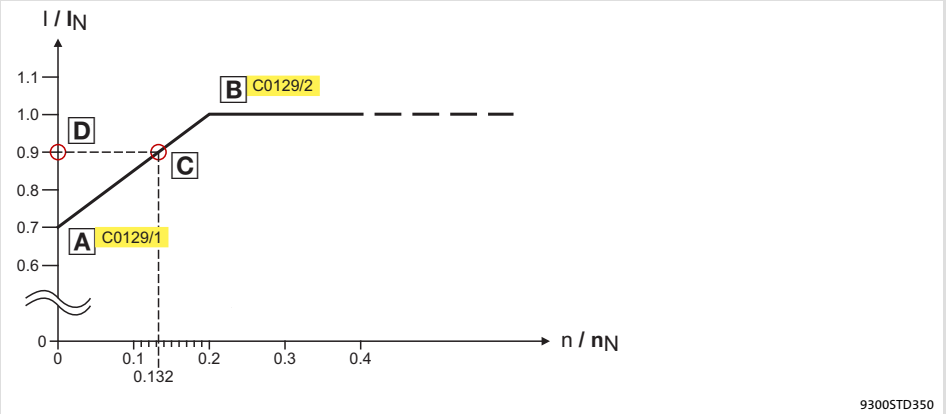

Fig. 8.2-5 Working point in the range of characteristic lowering

The lowered speed / torque characteristic (Fig. 8.2-5) reduces the permissible thermal load of self-ventilated standard motors. The characteristic is a line the definition of which requires two points:

- Point A: Definition with **C0129/1**
  This value also enables an increase of the maximally permissible load.
- Point B: Definition with **C0129/2**
  With increasing speeds, the maximally permissible load remains unchanged ($I_{Mot} = I_{rated}$).

In Fig. 8.2-5, the motor speed and the corresponding permissible motor torque (D) can be read for each working point (C on the characteristic (A) ... B). D can also be calculated using the values in **C0129/1** and **C0129/2** (evaluation coefficient "y", 📖 8.2-10).

Calculate release time and I^2xt load

Calculate the release time and the I^2 x t load of the motor considering the values in **C0129/1** and **C0129/2**(evaluation coefficient ”y”).

Formulae for release time	Information	
$T = -(\tau) \times \ln\left(1 - \frac{z+1}{\left(\frac{I_{Mot}}{y \times I_N}\right)^2 \times 100}\right)$	T	Release time of the I^2 x t monitoring
	τ	Thermal motor time constant (C0128)
	ln	Function: Natural logarithm
	I_{Mot}	Actual motor current (C0054)
	I_r	Rated motor current (C0088)
	z	Threshold value in C0120 (OC6) or C0127 (OC8)
$y = \frac{100\% - C0129/1}{C0129/2} \times \frac{n}{n_N} + C0129/1$	y	Evaluation coefficient
	n_{rated}	Rated speed (C0087)

Formulae for I^2 x t load	Information	
$L(t) = \left(\frac{I_{Mot}}{y \times I_N}\right)^2 \times 100\% \times \left(1 - e^{\frac{-t}{\tau}}\right)$	L(t)	Chronological sequence of the I^2 x t load of the motor (Display: C0066)
	y	Evaluation coefficient
	I_{Mot}	Actual motor current (C0054)
	Ir	Rated motor current (C0088)
	τ	Thermal motor time constant (C0128)
If the controller is inhibited, the I^2 x t load is reduced:		
$L(t) = L_{Start} \times \sqrt{e^{-\frac{t}{\tau}}}$	L_{Start}	I^2 x t load before controller inhibit If an error is triggered, the value corresponds to the threshold value set in C0120 (OC6) or C0127 (OC8).

8.2.9 Heatsink temperature

Via a temperature threshold, the heatsink temperature of the controller can be monitored:

► Adjustable threshold (OH4) under C0122
– The reset point is 5° C below the adjusted threshold.

► Fixed threshold (OH) = 85° C
– The reset point is at 80° C.

The response for exceeding the adjustable threshold can be set under C0582.

8.2.10 DC-bus voltage

In C0173 the mains voltage and the DC-bus voltage are set. The switching thresholds for overvoltage and undervoltage are based on these settings.

Selection C0173	Mains voltage [V AC]	Braking unit	Message LU (undervoltage) Set [V DC]	Message LU (undervoltage) Reset [V DC]	Message OU (overvoltage) Set [V DC]	Message OU (overvoltage) Reset [V DC]
0	< 400	Yes / no	285	430	770	755
1	400	Yes / no	285	430	770	755
2	400 ... 460	Yes / no	328	473	770	755
3	480	No	342	487	770	755
4	480	Yes	342	487	800	785

C0173 = 1: Lenze setting

Overvoltage

If the DC-bus voltage exceeds the upper switch-off threshold set in C0173, the OU message is triggered.

Undervoltage

If the DC-bus voltage falls below the lower switch-off threshold set in C0173, the LU message is triggered.

► An undervoltage message > 3 seconds is interpreted as an operating state (e.g. mains switched off) and entered in the history buffer. The entry is, however, deleted as soon as the cause has been eliminated (e.g. mains switched on again).

This operating state can occur if the control module is already supplied externally via terminals X5/39 and X5/59, but the mains voltage is not yet switched on.

► An undervoltage message < 3 seconds is interpreted as a fault (e.g. mains fault), entered in the history buffer and saved.

8.2.11 External error (EEr)

A HIGH signal at DCTRL-TRIP-SET triggers the EEr fault.

You can, for example, connect the digital input DCTRL-TRIP-SET with an input terminal (X5/Ex). In this way an external encoder can trigger the EEr fault.

The response can be set under C0581.

8.3 Overview of monitoring functions

The responses of monitoring functions can be partly parameterised via codes – in GDC in the parameter menu under **Monitoring** –.

Monitoring				**Possible fault responses** ● Lenze setting ✓ Can be set					
Fault message		**Description**	**Source**	Code	TRIP	Message	Warning	Fail-QSP	Off
x071	CCR	System fault	Internal		●				
x091	EEr	External monitoring (triggered via DCTRL)	FWM	C0581	●	✓	✓		✓
Voltage supply									
1020	OU	Overvoltage in the DC bus (C0173)	MCTRL			●			
1030	LU	Undervoltage in the DC bus (C0173)	MCTRL			●			
0107	H07	Internal fault (power section)	Internal		●				
Communication									
x061	CE0	Communication error on the automation interface (AIF)	AIF	C0126	✓		✓		●
x062	CE1	Communication error on the CAN1_IN process data input object (monitoring time adjustable via C0357/1)	CAN1_IN	C0591	✓		✓		●
x063	CE2	Communication error on the CAN2_IN process data input object (monitoring time adjustable via C0357/2)	CAN2_IN	C0592	✓		✓		●
x064	CE3	Communication error on the CAN3_IN process data input object (monitoring time adjustable via C0357/3)	CAN3_IN	C0593	✓		✓		●
x065	CE4	BUS-OFF state of the system bus (CAN) (too many faulty telegrams)	CAN	C0595	✓		✓		●
x166	P16	Faulty transmission of the sync telegram (system bus CAN)	Internal	C1290/1	✓		✓	●	✓
Temperatures / sensors									
x050	OH	Heatsink temperature > 85° C	MCTRL		●				
x053	OH3	Motor temperature > 150° C	MCTRL	C0583	●		✓		✓
x054	OH4	Heatsink temperature > C0122	MCTRL	C0582			●		✓
x057	OH7	Motor temperature > C0121	MCTRL	C0584			●		✓
x058	OH8	Motor temperature via inputs T1 and T2 is too high. **Caution: At "warning" (C0585 = 2) or "off" (C0585 = 3), the drive can be destroyed if the fault is not eliminated in time!**	MCTRL	C0585	✓		✓		●
x086	Sd6	Thermal sensor error on the motor (X7 or X8)	MCTRL	C0594	✓		✓		●
x110	H10	Thermal sensor error at the heatsink	FWM	C0588	●		1)		1)
x111	H11	Thermal sensor error in the device interior	FWM	C0588	●		1)		1)
Motor / feedback system									
0011	OC1	Short circuit of motor cable	MCTRL		●				
0012	OC2	Motor cable earth fault	MCTRL		●				

Monitoring				Possible fault responses ● Lenze setting ✓ Can be set					
Fault message		**Description**	**Source**	Code	TRIP	Message	Warning	Fail-QSP	Off
0015	OC5	Device utilisation I x t (fix 100%)	MCTRL		●				
0016	OC6	I^2 x t overload	MCTRL		●				
0018	OC8	I^2 x t overload advance warning	MCTRL	C0606	✓		●		✓
x032	LP1	Failure of a motor phase (current limit adjustable under C0599) **Caution: Can only be used with asynchronous motors. The function block MLP1 must be entered in C0465.**	MCTRL	C0597	✓		✓		●
x082	Sd2	Resolver error at X7 **Note:** If monitoring is switched off or in the case of ”Warning”, the machine can reach very high speeds in the case of fault, which may result in the damage of the motor and the machine that is driven!	MCTRL	C0586	●		✓		✓
x083	Sd3	Interruption of the digital frequency coupling. The input signal ”Lamp Control” at X9/8 is LOW **Please note: In the case of ”Warning” (C0587 = 2), the drive can be destroyed if the fault is not eliminated in time!**	MCTRL	C0587	●		✓		✓
x085	Sd5	At analog input X6/1, X6/2, the input current is < 2 mA Monitoring only possible if C0034 = 1	MCTRL	C0598	✓		✓		●
x087	Sd7	Absolute value encoder error at X8	MCTRL		✓				●
x088	Sd8	SinCos encoder error at X8 (filter setting under C0575)	MCTRL	C0580	✓				●
Speed									
x190	nErr	Speed control error (speed window can be set in C0576)	MCTRL	C0579	✓	✓	✓	✓	●
x200	NMAX	Maximum speed (C0596) has been exceeded.	MCTRL		●				
Time-out / overflow									
0105	H05	Internal fault (memory)	Internal		●				
x153	P03	Following error (digital frequency > C0255)	Internal	C0589	✓		●		✓
x163	P13	Angle controller overflow	Internal	C0590	●		✓		✓
x169	P19	Input signal at X9 is limited	Internal	C1292	✓		●		✓
Parameter setting									
0072	PR1	Check sum error in parameter set 1	Internal		●				
0074	PEr	Program error	Internal		●				
0075	PR0	Error in the parameter sets	Internal		●				
0079	PI	Error during parameter initialisation	Internal		●				
x089	PL	Error during rotor position adjustment	Internal		●				
Positioning									

x151	P01	Limit switch negative = LOW	Internal	C1285/1	✓			●	
x152	P02	Limit switch positive = LOW	Internal	C1285/2	✓			●	
x154	P04	Position limit exceeded in negative direction	Internal	C1285/3	✓			●	
x155	P05	Position limit exceeded in positive direction	Internal	C1285/4	✓			●	
x156	P06	No reference	Internal	C1287/1	✓			●	
x157	P07	Parameter set mode absolute	Internal	C1291/1	✓			●	
x158	P08	Actual reference dimension offset outside position limits	Internal	C1291/2	✓			●	
x159	P09	Impermissible programming	Internal	C1291/3	✓			●	
x162	P12	Encoder range exceeded	Internal	C1288/1	✓			●	
x164	P14	1. following error tolerance > C1218/1	Internal	C1286/1	✓		✓	●	✓
x165	P15	2. following error tolerance > C1218/2	Internal	C1286/2	✓		✓	✓	●
x167	P17	Control error of touch probe	Internal	C1289/1	✓		✓	●	✓
x168	P18	Internal limitation (display area, position limits, speeds)	Internal	C1289/2	✓		✓	●	✓

Representation of the error number:
x 0 = TRIP, 1 = message, 2 = warning
E. g. ”2091”: An external monitoring has triggered EEr warning
1) Setting only permitted by Lenze service

8.4 Code table

How to read the code table

Column	Abbreviation	Meaning
Code	Cxxxx	Code Cxxxx ● Parameter value of the code can be defined differently for each parameter set ● Parameter value is accepted immediately (ONLINE)
	1	Subcode 1 of Cxxxx
	2	Subcode 2 of Cxxxx
	ENTER	Changed parameter of code or subcode is accepted after pressing SHIFT PRG
	STOP	Changed parameter of code or subcode is accepted after pressing SHIFT PRG when the controller is inhibited
Designation		Designation of the code
Lenze		Lenze setting (value at delivery or after restoring the delivery status with C0002)
	→	The column "IMPORTANT" contains additional information
	Disp	The code only displays a value. It cannot be configured.
Selection	1 {%} 99	Min. value {unit} max. value
IMPORTANT	-	Short, important explanation

8.5 Basic configurations

Code		Possible settings			IMPORTANT
No.	Designation	Lenze	Selection		
C0002 STOP	PAR LOAD	0			**Load parameter set**
			0	Default setting	Recover Lenze setting
			1	Load PS	Load and activate parameter set saved in the controller ● Parameter set is loaded automatically after every mains connection
			11	Load PS 1 externally	Load parameter set from the keypad to the controller and activate it
			20	Load PS externally	Load all parameter sets from the keypad to the EEPROM of the controller ● The current parameter set in the RAM of the controller is overwritten. Save the parameter set
C0003	PAR SAVE	0			**Save parameter set**
			0	Executed	Saving completed
			1	Save PS 1	Save the parameters loaded in the controller in the parameter set selected
			11	Save externally	Transfer parameter set to the keypad
C0004	OP DISPLAY	56	0 {1} 1999		**Status display** Keypad shows selected code in the operating level if no other status messages from C0183 are active

Code		Possible settings				IMPORTANT	
No.	Designation	Lenze	Selection				
C0005 STOP	SIGNAL CFG	20000				**Signal configuration** Predefined basic configurations	📖 8.5-1
			0	COMMON		Changed basic configuration	
			100	Empty		All internal links are deleted	
			1000	Speed control			
			20000	Standard absolute positioning		Meaning of the digits: ● **2**xxxx: Positioning control ● 2**x**xxx: Positioning mode – 0: Positioning via home position – 2: Positioning via position switch points and with teach function – 6: External path control ● 2x**x**xx: Positioning type – 0: Absolute positioning – 2: Relative positioning ● 2xx**x**x: Voltage source for the control terminals – 0: External supply voltage – 1: Internal supply voltage ● 2xxx**x**: Device control – 0: Via control terminals – 1: Via LECOM A/B/LI – 3: Via AIF (INTERBUS, Profibus) – 5: Via system bus (CAN)	
			20003	Absolute/AIF			
			20010	Absolute/supply			
			20013	Absolute/supply/AIF			
			20200	Relative positioning			
			20203	Relative/AIF			
			20210	Relative/supply			
			20213	Relative/supply/AIF			
			22000	Absolute/switching pt.			
			22003	Absolute/switching pt./AIF			
			22010	Absolute/switching pt./supply			
			22013	Absolute/switching pt./supply/AIF			
			22200	Relative/switching pt.			
			22203	Relative/switching pt./AIF			
			22210	Relative/switching pt./supply			
			22213	Relative/switching pt./supply/AIF			
			26000	Interpolated set pos. selection			
			26010	Interpolated set pos. sel./supply			
C0006 STOP	OP MODE	→				**Motor control mode** → Depends on C0086 ● Change of C0086 resets value to the assigned default setting ● Change of C0006 sets C0086 = 0!	
			2	Servo async. Y asynchronous motor, star			
			3	Servo PM-SM Y PM synchronous motor, star			
			22	Servo asyn asychronous motor, delta			
C0009	LECOM ADDRESS	1	1	{1}	99	**LECOM unit address** Number of the node for operation via interface ● 10, 20, ..., 90 reserved for broadcast communication to device groups for RS232, RS485, optical fibre	
C0011	NMAX	3000	500	{1 rpm}	16000	**Max. speed N_{max}** Reference value for the absolute and relative setpoint selection for the acceleration and deceleration times ● For parameter setting via interface: – Greater changes in one step should only be made when the controller is inhibited	
C0012	TIR (ACC)	0.000	0.000	{0.001 s}	999.900	Acceleration time T_{ir} for the main setpoint of NSET (relating to speed variation 0 ... n_{max})	
C0013	TIF (DEC)	0.000	0.000	{0.001 s}	999.900	Deceleration time T_{if} for the main setpoint of NSET (relating to speed variation n_{max} ... 0)	

Code		Possible settings				IMPORTANT
No.	Designation	Lenze	Selection			
C0017	FCODE (QMIN)	50	-16000	{1 rpm}	16000	**FCODE (Q_{min})** Switching threshold $n_{is} < n_x$ n_{act} < C0017 activates the comparator output CMP1-OUT
C0018	FCHOP	1				**Chopper frequency f_{chop}**
			0	16/8 kHz		Noise-optimised operation with automatic changeover to 8 kHz
			1	8 kHz sine		Noise optimised operation
			2	16 kHz sine		
C0019	THRESH NACT=0	0	0	{1 rpm}	16000	**Speed threshold for standstill message** Status word bit DCTRL-NACT=0
C0021	SLIPCOMP	0.00	0.00	{0.01 %}	20.00	**Slip compensation** ● Only active with sensorless control below the value of C0291
C0022	IMAX CURRENT	→	0	{0.01 A}	1.50 I_N	**Limit current I_{max}** → Depends on C0086 ● Change of C0086 resets value to the assigned factory setting (1.5×Imotor)
C0025 STOP	FEEDBACK TYPE	10				**Feedback** Input of the encoder specified on the nameplate of the Lenze motor: C0025 automatically changes C0420, C0490, C0495
			0	COMMON		C0420, C0490 or C0495 has been changed subsequently
			1	Without feedback		Control without feedback system (sensorless control, SSC)
			10	RSx (resolver)		The resolver is designated with RSxxxxxxxx. If a resolver is selected, the rotor displacement angle in C0058 is set to -90°.
			110	IT-512-5V		Incremental encoder with TTL level
			111	IT-1024-5V		
			112	IT-2048-5V		
			113	IT-4096-5V		
			210	IS-512-5V		SinCos encoder
			211	IS-1024-5V		
			212	IS-2048-5V		
			213	IS-4096-5V		
			309	AS-128-8V (SKS)		Single-turn SinCos encoder with RS485 interface Co. Stegmann (absolute value encoder) ● Enter the supply voltage in C0421.
			310	AS-512-8V (SCS)		
			311	AS-1024-8V SRS		
			409	AM-128-8V (SKM)		Stegmann multi-turn SinCos encoder with RS485 interface (absolute value encoder) ● Enter the supply voltage in C0421.
			410	AM-512-8V (SCM)		
			411	AM-1024-8V (SRM)		
						If an absolute value encoder is selected, an SD7 trip is triggered.

Code		Possible settings				IMPORTANT	
No.	Designation	Lenze	Selection				
C0026			-199.99	{0.01 %}	199.99	**FCODE (AIN offset)** Freely configurable code for relative analog signals	See system manual (extension)
1	FCODE (OFFSET)	0.00				Offset for terminal X6/1, X6/2	
2	FCODE (OFFSET)	0.00				Offset for terminal X6/3, X6/4	
C0027			-199.99	{0.01 %}	199.99	**FCODE (AIN gain)** Freely configurable code for relative analog signals	
1	FCODE (GAIN)	100.00				Gain X6/1, X6/2	
2	FCODE (GAIN)	100.00				Gain X6/3, X6/4	
C0030	DFOUT CONST	3	0 1 2 3 4 5 6	256 inc/rev 512 inc/rev 1024 inc/rev 2048 inc/rev 4096 inc/rev 8192 inc/rev 16384 inc./rev.		**DFOUT constant** Constant for the master frequency output in increments per revolution	
C0032	FCODE GEARBOX	1	-32767	{1}	32767	**FCODE (gearbox factor numerator)** Freely configurable code	
C0033	GEARBOX DENOM	1	1	{1}	32767	**Gearbox factor denominator**	
C0034	MST CURRENT	0	0 1 2	-10 V ... + 10 V +4 mA ... +20 mA -20 mA ... +20 mA		**AIN input signal** Selection of the input signal for X6/1, X6/2	
C0037	SET-VALUE RPM	0	-16000	{1 rpm}	16000	**Setpoint selection (rpm)**	
C0039			-199.99	{0.01 %}	199.99	**NSET JOG setpoints** Fixed speeds (JOG setpoints) can be selected for NSET using digital inputs.	See system manual (extension)
1	JOG SET-VALUE	100.00					
2	JOG SET-VALUE	75.00					
3	JOG SET-VALUE	50.00					
4	JOG SET-VALUE	25.00					
5	JOG SET-VALUE	0.00					
...	...	...					
14	JOG SET-VALUE	0.00					
15	JOG SET-VALUE	0.00					
C0040	CTRL ENABLE	1	0 1	Controller inhibited Controller enabled		**Controller enable CINH**	
C0042	QSP	Disp	1 2	QSP not active QSP active		**Quick stop (QSP)**	
C0043	TRIP RESET	0	0 1	TRIP reset Error active		**Reset error** Reset of an active trip: ● Set C0043 = 0	
C0045	ACT JOG	Disp	0 1 2 ... 15	Nset active JOG 1 JOG 2 ... JOG 15		**NSET** JOG selection	See system manual (extension)
C0046	NSET-N	Disp	-199.99	{0.01 %}	199.99	**NSET** Main setpoint	See system manual (extension)
C0049	NSET-NADD	Disp	-199.99	{0.01 %}	199.99	**NSET** Additional setpoint	See system manual (extension)

Code		Possible settings				IMPORTANT	
No.	Designation	Lenze	Selection				
C0050	MCTRL-NSET2	Disp	-100.00	{0.01 %}	100.00	**MCTRL** n_{soll} at speed controller input	See system manual (extension)
C0051	MCTRL-NACT	Disp	-30000	{1 rpm}	30000	**Actual speed value**	
C0052	MCTRL-UMOT	Disp	0	{1 V}	800	**Motor voltage**	
C0053	UG-VOLTAGE	Disp	0	{1 V}	900	**DC-bus voltage**	
C0054	IMOT	Disp	0.0	{0.1 A}	300.0	**Current motor current I_{mot}** **MCTRL function block** ● MCTRL-IACT = 100 % = C002 2	See system manual (extension)
C0056	MCTRL-MSET2	Disp	-100.00	{0.01 %}	100.00	**MCTRL-MSET2 (Mset)** Torque setpoint (n-controller output)	See system manual (extension)
C0057	MAX TORQUE	Disp	0	{1 Nm}	400	**Max. torque** Max. possible torque of the drive configuration ● Depending on C0022, C0086	
C0058	ROTOR DIFF	-90.0	-180.0	{0.1°}	179.9	**Rotor displacement angle of motor (offset angle)** Zero phase of the rotor for synchronous motors (C0095). If a resolver is selected in C0025 or C0490, C0058 is set to -90°. ● Lenze motor with resolver: C0058 = (-)90° ● Lenze motor with Hiperface absolute value encoder: C0058 = 0°	
C0059	MOT POLE NO.	Disp	1	{1}	50	**Number of motor pole pairs**	
C0060	ROTOR POS	Disp	0	{1}	2047	**Motor rotor position** 1 revolution = 2048 inc	
C0061	HEATSINK TEMP	Disp	0	{1 °C}	100	**Heatsink temperature**	See system manual (extension)
C0063	MOT TEMP	Disp	0	{1 °C}	200	**Motor temperature**	
C0064	UTILISATION	Disp	0	{1 %}	150	**Device utilisation Ixt** Utilisation of the last 180 s C0064 >100 % releases trip OC5 Trip reset is only possible if C0064 < 95 %	
C0066	MOTOR LOAD	Disp	0	{1 %}	150	**$I^2 \times t$ utilisation of the motor**	
C0067	ACT TRIP	Disp	All fault messages		→ selection list 10	**TRIP error message** Current fault message	
C0070	VP SPEED CTRL	→	0.0	{0.5}	255.0	**V_{pn} speed controller** → Depends on C0086 ● Change of C0086 resets value to the assigned default setting	
C0071	TN SPEED CTRL	→	1.0	{0.5 ms}	600.0	**T_{nn} speed controller** >512 ms: Switched off → Depends on C0086 ● Change of C0086 resets value to the assigned default setting	
C0072	TD SPEED-CTRL	0.0	0.0	{0.1 ms}	32.0	**T_{dn} speed controller**	
C0075	VP CURR-CTRL	0.35	0.00	{0.01}	15.99	**V_{pi} current controller** ● Depends on C0086 ● Change of C0086 resets value to the assigned Lenze setting	

Code		Possible settings				IMPORTANT
No.	Designation	Lenze	Selection			
C0076	TN CURR CTRL	1.8	0.5	{0.1 ms}	2000,0	**T_{ni} current controller** At 2000 ms the function is deactivated ● Depends on C0086 ● Change of C0086 resets value to the assigned Lenze setting
C0077	VP FIELD CTRL	0.25	0.00	{0.01}	15.99	**V_{pF} field controller**
C0078	TN FIELD CTRL	15.0	1.0	{0.5 ms}	7999,0	**T_{nF} field controller** At 8000 ms the function is deactivated
C0081 STOP	MOT POWER	→	0.01	{0.01 kW}	150.00	**Rated motor power** → Depends on C0086 ● Change of C0086 resets value to the assigned Lenze setting ● Change of C0081 sets C0086 = 0
C0084 STOP	MOT RS	→	0.00	{0.01 Ω}	150.00	**Motor stator resistance** → Depends on C0086 ● Change of C0086 resets value to the assigned Lenze setting
C0085 STOP	MOT LS	→	0.00	{0.01}	655.35	**Motor leakage inductance** → Depends on C0086 ● Change of C0086 resets value to the assigned Lenze setting
C0086 STOP	MOT TYPE	→			See motor selection list	**Selection of motor type** → Depending on the controller used ● Change of C0086 resets C0006, C0022, C0070, C0071, C0075, C0076, C0081, C0084, C0085, C0087, C0088, C0089, C0090, C0091 to the assigned Lenze setting
			Controller	Lenze setting	Motor type assigned	Lenze motor type
			EVS9321	110	MDSKS56-23-150	MDSKSXX056-23, f_N: 150Hz
			EVS9322	111	MDSKS56-33-150	MDSKSXX056-33, f_N: 150Hz
			EVS9323	112	MDSKS71-13-150	MDSKSXX071-13, f_N: 150Hz
			EVS9324	116	MDSKS71-33-150	MDSKSXX071-33, f_N: 150Hz
			EVS9325	15	MDFKA80-120	MDFKAXX080-22, f_N: 120Hz
			EVS9326	19	MDFKA90-120	MDFKAXX090-22, f_N: 120Hz
			EVS9327	23	MDFKA100-120	MDFKAXX100-22, f_N: 120Hz
			EVS9328	27	MDFKA112-120	MDFKAXX112-22, f_N: 120Hz
			EVS9329	225	30kW-ASM-50	–
			EVS9330	227	45kW-ASM-50	–
			EVS9331	228	55kW-ASM-50	–
			EVS9332	229	75kW-ASM-50	–
C0087 STOP	MOT SPEED	→	300	{1 rpm}	16000	**Rated motor speed** → Depends on C0086 ● Change of C0086 resets value to the assigned Lenze setting

Code		Possible settings				IMPORTANT	
No.	Designation	Lenze	Selection				
C0088 STOP	MOT CURRENT	→	0.2	{0.1 A}	500.0	**Rated motor current** → Depends on C0086 ● Change of C0086 resets value to the assigned Lenze setting	
C0089 STOP	MOT FREQUENCY	→	10	{1 Hz}	1000	**Rated motor frequency**	
C0090 STOP	MOT VOLTAGE	→	50	{1 V}	500	**Rated motor voltage** → Depends on C0086 ● Change of C0086 resets value to the assigned Lenze setting	
C0091 STOP	MOT COS PHI	→	0.50	{0.01}	1.00	**Motor cos φ** → Depends on C0086 ● Change of C0086 resets value to the assigned Lenze setting	
C0093	DRIVE IDENT	Disp	0 1 93xx	Defective power section No power section 93xx		**Controller identification** 93xx: Lenze position controller	
C0094	PASSWORD	0	0	{1}	9999	**Password** ● Parameter access protection for the keypad. When the password is activated, only codes of the user menu can be accessed. For further possible selections see C0096	
C0095 STOP	ROTOR POS ADJ	0	0 1	Not active Active		**Rotor position adjustment** For synchronous motors ● C0058 displays the zero angle of the rotor ● C0095 = 1 starts position adjustment	
C0096 STOP			0 1 2 3	No access protection Read protection Write protection Read/Write protection		Extended password protection for bus systems with activated password (C0094) ● All codes in the user menu can be accessed	
1	AIF PROTECT.	0				AIF access protection	
2	CAN PROTECT.	0				CAN access protection	
C0099	S/W VERSION	Disp	x.xx			**Software version**	
C0101			0.000	{0.001 s}	999.900	**NSET** Additional acceleration times for the main setpoint (relating to speed variation 0 ... n_{max})	See system manual (extension)
1	NSET-TIR	0.000					
2	NSET-TIR	0.000					
...	...	...					
15	NSET-TIR	0.000					
C0103			0.000	{0.001 s}	999.900	**NSET** Additional deceleration times for the main setpoint (relating to speed variation 0 ... n_{max})	
1	NSET-TIF	0.000					
2	NSET-TIF	0.000					
...	...	...					
15	NSET-TIF	0.000					
C0105	QSP TIF	0.000	0.000	{0.001 s}	999.900	**Quick stop deceleration time (QSP)** (relating to speed variation 0 ... n_{max})	

Code		Possible settings				IMPORTANT	
No.	Designation	Lenze	Selection				
C0108		100.00	-199.99	{0.01 %}	199.99	**FCODE (AOUT gain)** Freely configurable code for relative analog signals	See system manual (extension)
1	FCODE (GAIN)					AOUT1-GAIN	
2	FCODE (GAIN)					AOUT2-GAIN	
C0109			-199.99	{0.01 %}	199.99	**FCODE (offset AOUT)** Freely configurable code for relative analog signals	See system manual (extension)
1	FCODE (OFFSET)	0.00				AOUT1-OFFSET	
2	FCODE (OFFSET)	0.00				AOUT2-OFFSET	
C0114			0 HIGH active 1 LOW active			**DIGIN polarity** Polarity of the terminals X5/Ex	See system manual (extension)
1	DIGIN1 POL	1				X5/E1	
2	DIGIN2 POL	1				X5/E2	
3	DIGIN3 POL	0				X5/E3	
4	DIGIN4 POL	0				X5/E4	
5	DIGIN5 POL	0				X5/E5	
C0116 STOP					→ selection list 2	**Signal configuration of the free digital outputs (FDO)** Free digital outputs can only be evaluated when they are linked to automation interfaces	See system manual (extension)
1	FDO-00	1000	FIXED0				
2	FDO-01	15000	DCTRL-TRIP				
3	FDO-02	30002	ENDED				
4	FDO-03	30014	VTRAV-REA				
5	FDO-04	30104	PF04				
...	...	...	...				
10	FDO-09	30109	PF09				
11	FDO-10	30110	PF10				
12	FDO-11	30111	PF11				
...	...	...	...				
21	FDO-20	30120	PF20				
22	FDO-21	30121	PF21				
...	...	...	...				
31	FDO-30	30130	PF30				
32	FDO -31	30131	PF31				
33	FDO-32	30132	PF32				
C0117 STOP		→			→ selection list 2	**Signal configuration DIGOUT** → depending on C0005	See system manual (extension)
1	DIGOUT1	30012	pos-ref-ok			X5/A1	
2	DIGOUT2	30013	POS-IN-TARGET			X5/A2	
3	DIGOUT3	500	DCTRL-RDY			X5/A3	
4	DIGOUT4	30101	pos-pfo1			X5/A4	
C0118			0 HIGH active 1 LOW active			**DIGOUT polarity** Polarity of the terminals X5/Ax	See system manual (extension)
1	DIGOUT1 POL	0				X5/A1	
2	DIGOUT2 POL	0				X5/A2	
3	DIGOUT3 POL	0				X5/A3	
4	DIGOUT4 POL	0				X5/A4	

Code		Possible settings				IMPORTANT	
No.	Designation	Lenze	Selection				
C0120	OC6 LIMIT	0	00	{1 %}	120	**Threshold for the $I^2 \times t$ monitoring of the motor** ● C0120 = 0: $I^2 \times t$ monitoring switched off ● $I^2 \times t$ > C0120 ⇨ TRIP OC6	
C0121	OH7 LIMIT	150	45	{1 °C}	150	**Temperature for OH7** Threshold for motor temperature warning	
C0122	OH4 LIMIT	85	45	{1 °C}	85	**Temperature for OH4** Threshold for heatsink temperature warning	
C0125	BAUD RATE	0	0 1 2 3 4	9600 baud 4800 baud 2400 baud 1200 baud 19200 baud		**LECOM baud rate** LECOM baud rate for 2102 communication module	
C0126	MONIT CE0	3	0 2 3	TRIP Warning Off		**CE0monitoring** Configuration of communication error monitoring with CE0 automation interface	
C0127	OC8 LIMIT	0	0	{1 %}	120	**Threshold for the $I^2 \times t$ advance warning of the motor** ● C0127 = 0: $I^2 \times t$ warning switched off ● $I^2 \times t$ > C0127 ⇨ fault message OC8 (response set in C0606)	
C0128	TAU MOTOR	5.0	0.1	{0.1 min}	50.0	**Thermal time constant of the motor** The time constant is required for calculating the $I^2 \times t$ disconnection.	
C0130	ACT TI	Disp				**NSET** Active T_i times of NSET	See system manual (extension)
C0134	RFG CHARAC	0	0 1	Linear S-shaped		**NSET** Ramp function generator characteristic for main setpoint	
C0135	CONTROL WORD	0	0	{1}	65535	**LECOM control word** Device control word for LECOM-A/B/LI or keypad	See system manual (extension)
C0136		Disp				**LECOM control word**	See system manual (extension)
1	CTRLWORD C135					Control word in DCTRL	
2	CTRLWORD CAN					Control word in CAN-IN	
3	CTRLWORD AIF					Control word in AIF-IN	
C0141	FCODE (SETVAL)	0.0	-199.9	{0.1 %}	199.9	**Main setpoint** Freely configurable code for relative analog signals ● Used as main setpoint in configurations C0005 = xxx1	
C0142	START OPTIONS	1	0 1	Start lock Auto start		**Start option** Start conditions are executed: ● After mains connection ● After message (t > 0.5s) ● After TRIP	

Code		Possible settings		IMPORTANT	
No.	Designation	Lenze	Selection		
C0150	STATUS WORD	Disp	0 {1} 65535	**Status word** Display when linked with automation interfaces ● Binary interpretation indicates the bit states	See system manual (extension)
C0151	FDO (DW)	Disp		Hexadecimal display of the free digital output signals configured in C0116 ● Binary interpretation indicates the bit states	See system manual (extension)
C0155	STATUS WORD 2	Disp	Bit00 Fail Bit08 R/L Bit01 Mmax Bit09 – Bit02 Imax Bit10 – Bit03 IMP Bit11 – Bit04 RDY Bit12 – Bit05 CINH Bit13 – Bit06 TRIP Bit14 – Bit07 Init Bit15 –	**Status word 2** Extended status word (decimal) ● Binary interpretation indicates the bit states	
C0156 STOP			→ selection list 2	Configuration of user-definable bits of the status word	See system manual (extension)
1	STAT.B0	1000	FIXED0		
2	STAT.B2	30012	pos-ref-ok		
3	STAT.B3	1000	FIXED0		
4	STAT.B4	10600	NOT1-OUT		
5	STAT.B5	30013	POS-IN-TARGET		
6	STAT.B14	15004	DCTRL-FAIL-QSP		
7	STAT.B15	500	DCTRL-RDY		
C0157		Disp		Display of the freely definable bits of the status word	See system manual (extension)
1	(C0156/1)				
...	...				
7	(C0156/7)				
C0161	ACT TRIP	Disp	Fault messages	**TRIP error message** Display of the current TRIP fault message (see also C0168/1)	
C0167	RESET FAILMEM	0	0 No reset 1 Reset	**History buffer reset** Clears the history buffer	
C0168		Disp	Fault messages	**Fault memory - number** List of faults occurred	
1	FAIL NO. ACT			Currently active fault	
2	FAIL NO. OLD1			Last fault	
...	...			...	
8	FAIL NO. OLD7			Seventh to last fault	
C0169		Disp	Power-on time	**Fault memory - time** List of the times when the faults occurred in C0168 (relating to C0179)	
1	FAILTIME ACT			Currently active fault	
2	FAILTIME OLD1			Last fault	
...	...			...	
8	FAILTIME OLD7			Seventh to last fault	

Code		Possible settings				IMPORTANT	
No.	Designation	Lenze	Selection				
C0170		Disp	Power-on time			**Fault memory - frequency** List of how often the faults have occurred consecutively in C0168	
1	COUNTER ACT					Currently active fault	
2	COUNTER OLD1					Last fault	
...	...					...	
8	COUNTER OLD7					Seventh to last fault	
C0172 STOP	OV REDUCE	0	0	{10 V}	100	**OV reduce** Threshold for activating the brake torque reduction before OU message	
C0173 STOP	UG LIMIT	1				**Adjustment of the DC-bus voltage** ● **Important!** Check and, if required, adapt during commissioning! ● All drive components in the interconnection must have the same values!	See system manual (extension)
			0	Mains<400V +-brake LU=285V, OU=770V-755V		Operation on mains <400 V with or without braking unit	
			1	Mains=400V +-brake LU=285V, OU=770V-755V		Operation on 400 V mains with or without braking unit	
			2	Mains=460V +-brake LU=328V, OU=770V-755V		Operation on 460 V mains with or without braking unit	
			3	Mains=480V -brake LU=342V, OU=770V-755V		Operation on 480 V mains without braking unit	
			4	Mains=480V +-brake LU=342V, OU=800V-785V		Operation on 480 V mains with braking unit	
C0178	OP TIMER	Disp	0	{1 s}	4294967295	**Operating time** Display of the time during which the controller was enabled	
C0179	MAINS TIMER	Disp	0	{1 s}	4294967295	**Mains operating time** Display of the time during which the mains was switched on	
C0182	TI S-SHAPED	20.00	0.01	{0.01 s}	50.00	**NSET** T_i time of the S shape ramp function generator (determines the form of the S-curve) ● Low values ⇒small S rounding ● High values ⇒large S rounding	See system manual (extension)

Code		Possible settings			IMPORTANT	
No.	Designation	Lenze	Selection			
C0183	DIAGNOSTICS	Disp			**Drive diagnostics** ● Indicates fault or status information ● Shows the smallest numerical value if several pieces of fault or status information are pending at the same time	
			0	OK	No fault	
			101	Initialisation	Initialisation phase	
			102	TRIP/fault	TRIP active	
			103	Emergency stop	Emergency stop was carried out	
			104	IMP message	Message active	
			105	Power OFF	Function is not supported	
			111	BSP C135 operation inhibit	Operation inhibit	
			112	BSP AIF operation inhibit		
			113	BSP CAN operation inhibit		
			121	RSP terminal 28 controller inhibit	Controller inhibited through X5/28	
			122	Controller inhibit, internal 1	DCTRL-CINH1	
			123	Controller inhibit, internal 2	DCTRL-CINH2	
			124	RSP C135/STOP controller inhibit	STOP key on the keypad	
			125	RSP AIF controller inhibit	Controller inhibited via AIF	
			126	RSP CAN controller inhibit	Controller inhibited through CAN	
			141	Switch-on inhibit	Restart protection active	
			142	IMP inhibit pulse inhibit	High resistance power outputs	
			151	QSP terminal ext. quick stop	Quick stop via MCTRL-QSP	
			152	QSP-C135 quick stop	Quick stop via STOP key on the keypad	
			153	QSP-AIF quick stop	Quick stop via AIF	
			154	QSP-CAN quick stop	Quick stop via system bus	
			250	Warning C168	Warning active	
C0190	NSET ARIT	0	0 1 2 3 4 5	OUT = C46 C46 + C49 C46 - C49 C46 * C49 C46 / C49 C46/(100 - C49)	**NSET** Arithmetic block in the NSET function block ● Connects main setpoint C0046 and additional setpoint C0040	See system manual (extension)
C0195	BRK1 T ACT	99.9	0.0	{0.1 s} 99.9	**BRK1** Brake closing time. Engagement time of the mechanical holding brake ● After the time under C0195 has elapsed, the ”mechanical brake closed” status is reached	See system manual (extension)

Code		Possible settings				IMPORTANT	
No.	Designation	Lenze	Selection				
C0196	BRK T RELEASE	0.0	0.0	{0.1 s}	60.0	**BRK1** Brake opening time (disengagement time of the mechanical holding brake) ● After the time under C0196 has elapsed, the ”mechanical brake open” status is reached. ● Observe technical data of the holding brake	See system manual (extension)
C0200	S/W ID	Disp				**Software identification** Software ID number	
C0201	S/W DATE	Disp				**Software date** Software creation date	
C0202	INTERNAL IO	Disp	0.000	{0.001}	100.000	Internal identification	
C0203	COMM. NO.	Disp	x / xxxx / xxxxx			**Commission number**	
C0204	SERIAL NO.	Disp	0	{1}	65535	**Serial number**	
C0206	PRODUCT DATE	Disp				**Production date**	
C0207	DL INFO 1	Disp				**Download info 1**	
C0208	DL INFO 2	Disp				**Download info 2**	
C0209	DL INFO 3	Disp				**Download info 3**	
C0220	NSET TIR ADD	0.000	0.000	{0.001 s}	999.900	**NSET** Acceleration time T_{ir} of the additional setpoint for NSET (relating to speed variation 0 ... n_{max})	See system manual (extension)
C0221	NSET TIF ADD	0.000	0.000	{0.001 s}	999.900	**NSET** Deceleration time T_{if} of the additional setpoint for NSET (relating to speed variation 0 ... n_{max})	See system manual (extension)
C0222	PCTRL VP	1.0	0.1	{0.1}	500.0	**PCTRL** Gain V_p	See system manual (extension)
C0223	PCTRL TN	400	20	{1 ms}	99999	**PCTRL** Integral action component T_n ● 99999 ms: Switched off	
C0224	PCTRL KD	0.0	0.0	{0.1}	5.0	**PCTRL** Differential component K_d	
C0241	NSET RFG-I = O	1.00	0.00	{0.01 %}	100.00	**NSET** Threshold for the comparison of the main setpoint at the input of the RFG and at the output of the RFG after the PT1 filter ● If the input value reaches the threshold, NSET-RFG-I=0 is set to HIGH ● 100 % = n_{max}	See system manual (extension)
C0244	BRK M SET	0.00	-100.00	{0.01 %}	100.00	**BRK1** Holding torque of the DC injection brake ● 100 % = C0057	
C0250	FCODE 1BIT	0	0 Lower limit 1 Upper limit			**FCODE (1 bit digital)** Freely configurable code	See system manual (extension)

Code		Possible settings				IMPORTANT	
No.	Designation	Lenze	Selection				
C0252	ANGLE OFFSET	0	-245760000	{1 inc}	245760000	**DFSET** Anglular offset, fixed angular offset for digital frequency configurations ● 1 rev = 65536 inc	See system manual (extension)
C0253	ANGLE N-TRIM	→	-32767	{1 inc}	32767	**DFSET** Speed-dependent phase trimming → Depending on C0005, C0025, C0490 ● Change of C0005, C0025, or C0490 resets C0253 to the Lenze settingassigned ● 1 rev. = 65536 inc ● C0253 is reached at 15000 rpm	See system manual (extension)
C0254	VP ANGLE CTRL	0.4000	0.0000	{0.0001}	3.9999	**MCTRL** Gain V_p of the angle controller	See system manual (extension)
C0255	THRESHOLD P03	327680	10	{1 inc}	1800000000	**Following error limit P03** ● 1 rev. = 65536 inc ● Following error > C0255 triggers fault ”P03”	
C0260	MPOT1 HIGH	100.00	-199.99	{0.01 %}	199.99	**MPOT1** Upper limit ● Condition: C0260 > C0261	See system manual (extension)
C0261	MPOT1 LOW	-100.00	-199.99	{0.01 %}	199.99	**MPOT1** Lower limit ● Condition: C0261 < C0260	See system manual (extension)
C0262	MPOT1 TIR	10.0	0.1	{0.1 s}	6000.0	**MPOT1** Acceleration time (rel. to change 0 ... 100 %)	See system manual (extension)
C0263	MPOT1 TIF	10.0	0.1	{0.1 s}	6000.0	**MPOT1** Deceleration time (rel. to change 0 ... 100 %)	See system manual (extension)
C0264	MPOT1 ON/OFF	0	0 No change 1 Deceleration with T_{if} to 0 % 2 Deceleration with T_{if} to C0261 3 Skip with T_{if} = 0 to 0 % 4 Skip with T_{if} = 0 to C0261 5 Acceleration with T_{ir} to C0260			**MPOT1** Executable functions if motor potentiometer is deactivated via input MPOT1-INACTIVE	See system manual (extension)
C0265	MPOT1 INIT	0	0 Value during mains failure 1 Lower limit value from C0261 2 0 %			**MPOT1** Initialisation Value which is accepted at mains switching and activated motor potentiometer	See system manual (extension)
C0267 STOP					→ selection list 2	**MPOT1** Configuration of digital input signals	See system manual (extension)
1	MPOT1-UP	1000	FIXED0				
2	MPOT1-DOWN	1000	FIXED0				
C0268 STOP	MPOT1-INACT	1000	FIXED0		→ selection list 2	**MPOT1** Configuraton of digital input signal	See system manual (extension)
C0269		Disp				**MPOT1**	See system manual (extension)
1	MPOT1-UP						
2	MPOT1-DOWN						
3	MPOT1-INACT						

Code		Possible settings				IMPORTANT	
No.	Designation	Lenze	Selection				
C0325	VP2 ADAPT	1.0	0.1	{0.1}	500.0	**PCTRL** Process controller adaption gain V_{p2}	See system manual (extension)
C0326	VP3 ADAPT	1.0	0.1	{0.1}	500.0	**PCTRL** Process controller adaption gain V_{p3}	See system manual (extension)
C0327	SET2 ADAPT	100.00	0.00	{0.01 %}	100.00	**PCTRL** Set speed threshold nset2 of the process controller adaptation (condition: C0327 > C0328)	See system manual (extension)
C0328	SET1 ADAPT	0.00	0.00	{0.01 %}	100.00	**PCTRL** Setpoint speed threshold of the process controller adaptation ● Condition: C0328 < C0327	See system manual (extension)
C0329	ADAPT ON/OFF	0	0 1 2 3	No process controller adaptation Externally via input Adaptation via setpoint Adaptation via control difference		**PCTRL** Activate process controller adaption	See system manual (extension)
C0332	PCTRL TIR	0.000	0.000	{0.001 s}	999.900	**PCTRL** Acceleration time T_{ir} (relating to setpoint change 0...100 %)	See system manual (extension)
C0333	PCTRL TIF	0.000	0.000	{0.001 s}	999.900	**PCTRL** Deceleration time T_{if} (relating to setpoint change 0...100 %)	See system manual (extension)
C0336	ACT VP	Disp	0.0	{0.1}	500.0	**PCTRL** Current gain V_p	See system manual (extension)
C0337	BI/UNIPOLAR	0	0 1	Bipolar Unipolar		**PCTRL** Bipolar/unipolar process controller range	See system manual (extension)
C0338	ARIT1 FUNCT	1	0 1 2 3 4 5	OUT = IN1 OUT = IN1 + IN2 OUT = IN1 - IN2 OUT = IN1 × IN2 OUT = IN1 / IN2 OUT = IN1/(100% - IN2)		**ARIT1** Function selection	See system manual (extension)
C0339 STOP			→ Selection list 1			**ARIT1** Configuration of analog input signals	See system manual (extension)
1	ARIT1-IN1	1000	FIXED0%				
2	ARIT1-IN2	1000	FIXED0%				
C0340		Disp				**ARIT1** Display of analog input signals	See system manual (extension)
1	(C0339/1)						
2	(C0339/2)						
C0350	CAN ADDRESS	1	1	{1}	63	**CAN** System bus node address ● Change becomes effective after "reset node" command	See system manual (extension)
C0351	CAN BAUD RATE	0	0 1 2 3 4	500 kbps 250 kbps 125 kbps 50 kbps 1000 kbit/s		**CAN** System bus baud rate ● Change becomes effective after "reset node" command	See system manual (extension)

Code		Possible settings				IMPORTANT	
No.	Designation	Lenze	Selection				
C0352	CAN MST	0	0 1	Slave Master		**CAN** Configuration of system bus nodes ● Change becomes effective after ”reset node” command	See system manual (extension)
C0353			0 1	C0350 C0354		**CAN** CAN-IN / CAN-OUT selection of the system bus address	See system manual (extension)
1	IN/OUT1 ADR	0				CAN-IN1, CAN-OUT1	
2	IN/OUT2 ADR	0				CAN-IN2, CAN-OUT2	
3	IN/OUT3 ADR	0				CAN-IN3, CAN-OUT3	
C0354			1	{1}	513	**CAN** CAN-IN / CAN-OUT node address 2 ● Individual addressing of system bus process data objects	See system manual (extension)
1	IN1 ADR2	1				CAN-IN1	
2	OUT2 ADR2	129				CAN-OUT1	
3	IN2 ADR2	257				CAN-IN2	
4	OUT2 ADR2	258				CAN-OUT2	
5	IN3 ADR2	385				CAN-IN3	
6	OUT3 ADR2	386				CAN-OUT3	
C0355		Disp	0	{1}	2047	**CAN** System bus identifiers	See system manual (extension)
1	IN1 ID						
2	OUT1 ID						
3	IN2 ID						
4	OUT2 ID						
5	IN3 ID						
6	OUT3 ID						
C0356			0	{1 ms}	65000	**CAN** System bus time settings	See system manual (extension)
1	CAN BOOT UP	3000				Required for CAN interconnection without master	
2	OUT2 CYCLE	0				C0356 = 0: Event-controlled process data transfer	
3	OUT3 CYCLE	0				C0356 > 0: Cyclic process data transfer	
4	CAN DELAY	20				When the ”Operational” NMT status is reached (after ”Pre-operational” or ”Stopped”), the ”CANdelay” delay time is started. After the delay time has elapsed, the PDOs CAN-OUT2 and CAN-OUT3 are transmitted for the first time	

Code		Possible settings			IMPORTANT	
No.	Designation	Lenze	Selection			
C0357			0 {1 ms} 65000		**CAN** System bus monitoring times ● After a fault message, the CAN objects remain in receive position	See system manual (extension)
1	CE1 MONIT TIME	3000			CAN-IN1	
2	CE2 MONIT TIME	3000			CAN-IN2	
3	CE3 MONIT TIME	3000			CAN-IN3	
C0358	RESET NODE	0	0	No function	**CAN** Establish nodal reset point for system bus	See system manual (extension)
			1	CAN reset		
C0359	CAN STATE	Disp	0	Operational	**CAN** System bus status	See system manual (extension)
			1	Pre-operational		
			2	Warning		
			3	Bus off		
C0360		Disp	0 65535		**CAN** Telegram counter (number of telegrams) Count values > 65535: Restart with 0	See system manual (extension)
1	MESSAGE OUT				All telegrams sent	
2	MESSAGE IN				All telegrams received	
3	MESSAGE OUT1				Telegrams sent on CAN-OUT1	
4	MESSAGE OUT2				Telegrams sent on CAN-OUT2	
5	MESSAGE OUT3				Telegrams sent on CAN-OUT3	
6	MESSAGE POUT1				Telegrams sent on parameter channel 1	
7	MESSAGE POUT2				Telegrams sent on parameter channel 2	
8	MESSAGE IN1				Telegrams received from CAN-IN1	
9	MESSAGE IN2				Telegrams received from CAN-IN2	
10	MESSAGE IN3				Telegrams received from CAN-IN3	
11	MESSAGE PIN1				Telegrams received from parameter channel 1	
12	MESSAGE PIN2				Telegrams received from parameter channel 2	

Code		Possible settings				IMPORTANT	
No.	Designation	Lenze	Selection				
C0361		Disp	0.00	{1.00 %}	100.00	**CAN** Bus load of system bus For perfect operation the entire bus load (all nodes connected) should be less than 80 %	See system manual (extension)
1	LOAD OUT					All telegrams sent	
2	LOAD IN					All telegrams received	
3	LOAD OUT1					Telegrams sent on CAN-OUT1	
4	LOAD OUT2					Telegrams sent on CAN-OUT2	
5	LOAD OUT3					Telegrams sent on CAN-OUT3	
6	LOAD POUT1					Telegrams sent on parameter channel 1	
7	LOAD POUT2					Telegrams sent on parameter channel 2	
8	LOAD IN1					Telegrams received from CAN-IN1	
9	LOAD IN2					Telegrams received from CAN-IN2	
10	LOAD IN3					Telegrams received from CAN-IN3	
11	LOAD PIN1					Telegrams received from parameter channel 1	
12	LOAD PIN2					Telegrams received from parameter channel 2	
C0362	SYNC CYCLE	1.0	-32.0	{0.1 ms}	32.0	**CAN** Time between two sync telegrams on the system bus	See system manual (extension)
C0363	SYNC CORR	1	1 0.8 µs 2 1.6 µs 3 2.4 µs 4 3.2 µs 5 4.0 µs			**CAN** Correction value for C0362	See system manual (extension)
C0364 STOP	CAN ACTIVE	1000	FIXED0		→ selection list 2	**CAN** Configuraton of digital input signal ● Switches system bus from ”Pre-operational” to ”Operational” via external signal	See system manual (extension)
C0365	CAN ACTIVE	Disp				**CAN** System bus status	
C0366	SYNC RESPONSE	1	0 No sync response 1 Sync response			**CAN** Response to sync telegram by master	See system manual (extension)
C0367	SYNC RX ID	128	1	{1}	256	**CAN** Receive identifier (Rx) ● Sync identifier for grouping for accepting the data in CAN-IN1	See system manual (extension)
C0368	SYNC TX ID	128	1	{1}	256	**CAN** Transmit identifier (Tx) ● Identifier for the generation of a sync telegram	
C0369	SYNC TX TIME	0	0	{1}	65000	**CAN** Sync transmission interval (Tx) ● Transmission interval of the object set under C0368	See system manual (extension)

Code		Possible settings				IMPORTANT	
No.	Designation	Lenze	Selection				
C0400	AIN1-OUT	Disp	-199.99	{0.01 %}	199.99	**AIN1** Display of the output signal	See system manual (extension)
C0402 STOP	AIN1-OFFSET	19502	FCODE-26/1		→ Selection list 1	**AIN1** Offset configuration	
C0403 STOP	AIN1-GAIN	19504	FCODE-27/1		→ Selection list 1	**AIN1** Configuration of the gain	
C0404		Disp	-199.99		199.99	**AIN1** Display of analog input signals	
1	AIN1-OFFSET						
2	AIN1-GAIN						
C0405	AIN1-OUT	Disp	-199.99		199.99	**AIN2** Display of the output signal	See system manual (extension)
C0407 STOP	AIN2-OFFSET	19503	FCODE-26/2		→ Selection list 1	**AIN2** Offset configuration	
C0408 STOP	AIN2-GAIN	19505	FCODE-27/2		→ Selection list 1	**AIN2** Configuration of the gain	
C0409		Disp	-199.99	{0.01 %}	199.99	**AIN2** Display of analog input signals	
1	AIN2-OFFSET						
2	AIN2-GAIN						
C0416 STOP	RESOLVER ADJ	0	0	{1}	99999999	**Correction of resolver fault** For Lenze motors read out resolver errors from nameplate	
C0420 STOP	ENCODER CONST	512	1	{1 inc./rev.}	8192	**Encoder input X8** Selection of the encoder constant ● If an absolute value encoder is selected in C0025, an SD7 trip is triggered when the encoder constant is changed.	
C0421 STOP	ENC VOLTAGE	5.00	5.00	{0.1 V}	8.00	**Encoder voltage** Set voltage for encoder ● CAUTION! A wrong entry can destroy the encoder	
C0425	DFIN CONST	3	0 256 inc/rev 1 512 inc/rev 2 1024 inc/rev 3 2048 inc/rev 4 4096 inc/rev 5 8192 inc/rev 6 16384 inc./rev.			**DFIN** increment of the digital frequency input	See system manual (extension)
C0426	DFIN-OUT	Disp	-32767	{1 rpm}	32767	**DFIN** Output signal	See system manual (extension)
C0427	DFIN FUNCTION	0	0 2-phase 1 A pulse / B direction of rotation (right) 2 Pulse A or B			**DFIN** Selection of the digital frequency signal	
C0429	TP5 DELAY	0	-32767	{1 inc}	32767	**DFSET, DFRFG** Dead time compensation for the touch probe function	See system manual (extension)

Code		Possible settings				IMPORTANT	
No.	Designation	Lenze	Selection				
C0431 STOP	AOUT1-IN	5001	MCTRL-NACT		→ Selection list 1	**AOUT1** Configuration - analog input signal	See system manual (extension)
C0432 STOP	AOUT1-OFFSET	19512	FCODE-109/1		→ Selection list 1	**AOUT1** Offset configuration	
C0433 STOP	AOUT1-GAIN	19510	FCODE-108/1		→ Selection list 1	**AOUT1** Configuration of the gain	
C0434		Disp	-199.99	{0.01 %}	199.99	**AOUT1** Display of analog input signals	
1	AOUT1-IN						
2	AOUT1-OFFSET						
3	AOUT1-GAIN						
C0436 STOP	AOUT2-IN	5002	MCTRL-MSET2		→ Selection list 1	**AOUT2** Configuration - analog input signal	See system manual (extension)
C0437 STOP	AOUT2-OFFSET	19513	FCODE-109/2		→ Selection list 1	**AOUT2** Offset configuration	
C0438 STOP	AOUT2-GAIN	19511	FCODE-108/2		→ Selection list 1	**AOUT2** Configuration of the gain	
C0439		Disp	-199.99	{0.01 %}	199.99	**AOUT2** Display of analog input signals	
1	AOUT2-IN						
2	AOUT2-OFFSET						
3	AOUT2-GAIN						
C0440 STOP	STATE-BUS	1000			→ selection list 2	**State bus X5/ST** Configuration of input signal	
C0441	STATE-BUS	Disp				**State bus X5/ST** Display of input signal	
C0443	DIGIN-OUT	Disp	0	{1}	255	**DIGIN** Display of the signals at X5/E1 ... X5/E5 as decimal value ● Binary interpretation indicates terminal signals	See system manual (extension)
C0444	DIGOUT A1...A4	Disp	0		1	**DIGOUT** Display of the set polarity at DIGOUT1 ... 4	See system manual (extension)
1	DIGOUT1						
2	DIGOUT2						
3	DIGOUT3						
4	DIGOUT4						
C0450 STOP	BRK1-NX	1000	FIXED0%		→ Selection list 1	**BRK1** Configuration - analog input signal	See system manual (extension)
C0451 STOP	BRK1-SET	1000	FIXED0		→ selection list 2	**BRK1** Configuraton of digital input signal	
C0452 STOP	BRK1-SIGN	1000	FIXED0%		→ Selection list 1	**BRK1** Configuration - analog input signal	
C0458		Disp	-199.99	{0.01 %}	199.99	**BRK1** Display of analog input signals	
1	BRK1-NX						
2	BRK1-SIGN						
C0459	BRK1-SET	Disp				**BRK1** Display of digital input signal	

Code		Possible settings		IMPORTANT	
No.	Designation	Lenze	Selection		
C0464	CUSTOMER I/F	Disp	0 Original 1 Changed	**Customer interface** Status of selected basic configuration ● Reassignment of terminals in a basic configuration in C0005 does not change C0005 and sets C0464 = 1 ● Adding or removing function blocks or changing the signal flow among the function blocks in a basic configuration of C0005 sets C0005 = 0 and C0464= 1	
C0465 STOP	FB LIST	→	→ selection list 5	**FB processing table** Contained in the program of signal processing (sequence in which the function blocks are processed) → Depending on C0005. Changing C0005 loads assigned processing list – Lenze setting: C0005 = 20000 ● After changing the signal flow, the processing table must be adapted. Otherwise the controller uses the wrong signals! ● The function blocks DIGIN, DIGOUT, AIF-IN, CAN-IN, and MCTRL are always processed and do not have to be entered in the list	See system manual (extension)
1		0			
2		0			
...		...			
20		30000			
...		0			
25		5700			
26		10600			
...		0			
30		70			
...		...			
33		75			
...		...			
36		250			
...		...			
39		20000			
...		...			
50		0			
C0466	CPU T REMAIN	Disp		**Remaining process time** For processing function blocks	
C0469 STOP	KEY STOP FUNCTION	2	0 Deactivated 1 Set CINH, controller inhibit 2 Set QSP, quick stop	**Keypad** Set function of the STOP key on the keypad	
C0470			0 {1} 255	**FCODE** Freely configurable code for digital signals ● The data words C0470 and C0471 are in parallel and are identical	See system manual (extension)
0	FCODE 8BIT DIGITAL	0			
1	FCODE BIT 0-7	0			
2	FCODE BIT8-15	0			
3	FCODE BIT16-23	0			
4	FCODE BIT24-31	0			
C0471	FCODE 32 BIT	0	0 {1} 4294967296	**FCODE 32 bits digital** Freely configurable code for digital signals ● The data words C0470 and C0471 are in parallel and are identical	See system manual (extension)

Code		Possible settings				IMPORTANT	
No.	Designation	Lenze	Selection				
C0472	FCODE ANALOG		-199.99	{0.01 %}	199.99	**FCODE** Freely configurable code for relative analog signals	See system manual (extension)
1		0.00					
2		0.00					
3		100.00					
...		...					
6		100.00					
...		...					
20		0.00					
C0473	FCODE ABS		-32767	{1}	32767	**FCODE** Freely configurable code for absolute analog signals	See system manual (extension)
1		1					
2		1					
3		0					
...		...					
10		0					
C0474	FCODE PH		-2147483648	{1}	2147483647	**FCODE** Freely configurable code for angle singals ● 1 rev. = 65536 inc	See system manual (extension)
1		0					
...		...					
5		0					
C0475	FCODE DF		-16000	{1 rpm}	16000	**FCODE** Freely configurable code for angular difference singals ● 1 rev. = 65536 inc	See system manual (extension)
1		0					
2		0					
C0490 STOP	FEEDBACK POS	0				**Position feedback system** Feedback system for the position controller	
			0	Resolver at X7		The feedback system can be combined with the settings C0495 = 0, 1, 2, 3, 4	
			1	Encoder TTL at X8		The selection also sets C0495 to the same value	
			2	Encoder sin an X8			
			3	Absolute value encoder ST at X8			
			4	Absolute value encoder MT at X8			
C0495 STOP	FEEDBACK N	0				**Speed feedback system** Feedback system for the speed controller	
			0	Resolver at X7		The feedback system can be combined with the settings C0490 = 0, 1, 2, 3, 4 ● C0490 = 0 sets the rotor displacement angle in C0058 to -90°	
			1	Encoder TTL at X8		The selection also sets C0490 to the same value	
			2	Encoder sin an X8			
			3	Absolute value encoder ST at X8			
			4	Absolute value encoder MT at X8			
C0497	NACT-FILTER	2.0	0.0	{0.1 ms}	50.0	**$n_{act\ filter\ time\ constant}$** Time constant for actual speed value C0497 = 0 ms: Switched off	

Code		Possible settings		IMPORTANT	
No.	Designation	Lenze	Selection		
C0517			0.00 {0.01} 1999.00	**User menu** Up to 32 entries ● Under the subcodes the numbers of the desired code are entered ● The input is effected in the format xxx.yy – xxx: Code number – yy: Subcode number ● It is not checked whether the code entered exists	
1	USER MENU	51.00	C0051/0 MCTRL-NACT		
2	USER MENU	54.00	C0054/0 Imot		
3	USER MENU	56.00	C0056/0 MCTRL-MSET2		
4	USER MENU	46.00	C0046/0 N		
5	USER MENU	49.00	C0049/0 NADD		
6	USER MENU	183.00	C0183/0 Diagnostics		
7	USER MENU	168.01	C0168/1 Fail no. act		
8	USER MENU	86.00	C0086/0 Mot type		
9	USER MENU	22.00	C0022/0 Imax current		
10	USER MENU	5.00	C005/0 signal cfg		
11	USER MENU	11,00	C0011/0 Nmax		
12	USER MENU	12.00	C0012/0 T_{ir}		
13	USER MENU	13.00	C0013/0 T_{if}		
14	USER MENU	105.00	C0105/0 QSP T_{if}		
15	USER MENU	39.01	C0039/1 JOG setpoint		
16	USER MENU	70.00	C0070/0 Vp speed CTRL		
17	USER MENU	71.00	C0071/0 Tn speed CTRL		
18	USER MENU	0	Not assigned		
...	...	0	Not assigned		
31	USER MENU	94.00	C0094/0 Password		
32	USER MENU	3.00	C0003/0 Par save		
C0520 STOP	DFSET-IN	1000	FIXEDPHI-0 → Selection list 4	**DFSET** Configuration of input signal	See system manual (extension)
C0521 STOP	DFSET-VP-DIV	1000	FIXED0% → Selection list 1	**DFSET** Configuration of gain factor numerator	See system manual (extension)
C0522 STOP	DFSET-RAT-DIV	1000	FIXED0% → Selection list 1	**DFSET** Configuration of gearbox factor numerator	
C0523 STOP	DFSET-A-TRIM	1000	FIXED0% → Selection list 1	**DFSET** Configuration of phase trimming	
C0524 STOP	DFSET-N-TRIM	1000	FIXED0% → Selection list 1	**DFSET** Speed trimming of DFSET	
C0525 STOP	DFSET-0-PULSE	1000	FIXED0 → selection list 2	**DFSET** Configuration of one-time zero pulse activation	See system manual (extension)
C0526 STOP	DFSET-RESET	1000	FIXED0 → selection list 2	**DFSET** Integrator resetting	
C0527 STOP	DFSET-SET	1000	FIXED0 → selection list 2	**DFSET** Configuration of integrator setting	

Code		Possible settings				IMPORTANT	
No.	Designation	Lenze	Selection				
C0528		Disp	$-2 \cdot 10^9$	{1}	$2 \cdot 10^9$	**DFSET**	See system manual (extension)
1	0-PULSE A					Angular difference between 2 index pulses	
2	OFFSET					Offset from C0523 × C0529 + C0252	
C0529	MULTIP OFFSET	1	-20000	{1}	20000	**DFSET** Offset multiplier	
C0530	DF EVALUATION	0	0 With gearbox factor 1 Without gearbox factor			**DFSET** Evaluation of the digital frequency	
C0531	ACT 0 DIV	1	1	{1}	16384	**DFSET** Divisor for actual zero pulse	
C0532	0-PULSE/TP	1	1 0-pulse 2 Touch probe			**DFSET** Selection of zero pulse or touch probe	
C0533	VP DENOM	1	1	{1}	32767	**DFSET Vp denominator** Gain factor denominator	
C0534	SYNC MODE	0	0 Inactive 1 Continuous 2 Continuously switchable 10 Once, fast way 11 Once, + direction 12 Once, - direction 13 Once, 2 × zero pulse			**DFSET** Mode for synchronising the zero pulse and/or touch probe	
C0535	SET 0 DIV	1	1	{1}	16384	**DFSET** Set zero pulse scaler	
C0536		Disp	-32767	{1}	32767	**DFSET** Display of analog input signals	See system manual (extension)
1	DFSET-VP-DIV						
2	DFSET-RAT-DIV						
3	DFSET-A-TRIM						
C0537	DFSET-N-TRIM	Disp	-199.99	{0.01 %}	199.99	**DFSET** Display of analog input signal	
C0538		Disp				**DFSET** Display of digital input signals	
1	DFSET-0-PULSE						
2	DFSET-RESET						
3	DFSET-SET						
C0539	DFSET-IN	Disp	-32767	{1 rpm}	32767	**DFSET** Display of input signal	
C0540	DFOUT-FUNCTION	2	0 Analog input 1 Phase difference input 2 Resolver simulation + index pulse 3 Resolver simulation without index pulse 4 X10 = X9 5 X10 = X8			**DFOUT** Encoder output function ● X9 is inhibited if 0, 1, 2 or 3 has been selected ● The input signals are buffered	See system manual (extension)
C0541 STOP	DFOUT-AN-IN	1000	FIXED0%		→ Selection list 1	**DFOUT** Configuration - analog input signal	See system manual (extension)
C0542 STOP	DFOUT-DF-IN	5000	MCTRL-PHI-ACT		→ Selection list 4	**DFOUT** Digital frequency signal configuration	
C0544 STOP	DFOUT-SYN-RDY	1000	FIXED0		→ selection list 2	**DFOUT** Configuration of synchronisation signal for the zero pulse	

Code		Possible settings				IMPORTANT	
No.	Designation	Lenze	Selection				
C0545	DFOUT-PH OFFSET	0	0	{1 inc}	65535	**DFOUT** Angular offset	See system manual (extension)
C0546	DFOUT-MIN INC/REV	1000	-245760000	{1inc}	245760000	**DFOUT** Masking (suppressing) interference pulses at X5/E5 (set pulse of touch probe signal) ● The size of the masking window between two set pulses is set	
C0547	DFOUT-AN-IN	Disp	-199.99	{0.01 %}	199.99	**DFOUT** Display of analog input signal	See system manual (extension)
C0548	DFOUT-SYN-RDY	Disp	0		1	**DFOUT** Display of digital input signal	
C0549	DFOUT-DF-IN	Disp	-32767	{1 rpm}	32767	**DFOUT** Display of input signal	
C0560			-199.99	{0.01 %}	199.99	**FIXSET1** Fixed setpoints	See system manual (extension)
1	FIXSET1-VALUE	100					
2	FIXSET1-VALUE	75					
3	FIXSET1-VALUE	50					
4	FIXSET1-VALUE	25					
5	FIXSET1-VALUE	0					
...	...	...					
15	FIXSET1-VALUE	0					
C0561 STOP	FIXSET1-AIN	1000	FIXED0%		→ Selection list 1	**FIXSET1** Configuration - analog input signal	
C0562 STOP					→ selection list 2	**FIXSET1** Configuration of digital input signals	
1	FIXSET1-IN1	1000	FIXED0				
2	FIXSET1-IN2	1000	FIXED0				
3	FIXSET1-IN3	1000	FIXED0				
4	FIXSET1-IN4	1000	FIXED0				
C0563	FIXSET1-AIN	Disp	-199.99	{0.01 %}	199.99	**FIXSET1** Display of analog input signal	
C0564		Disp				**FIXSET1** Display of digital input signals	
1	FIXSET1-IN1						
2	FIXSET1-IN2						
3	FIXSET1-IN3						
4	FIXSET1-IN4						
C0570 STOP	S&H1-IN	1000	FIXED0%		→ Selection list 1	**S&H1** Configuration - analog input signal	See system manual (extension)
C0571 STOP	S&H1-LOAD	1000	FIXED0		→ selection list 2	**S&H1** Configuraton of digital input signal	
C0572	S&H1-IN	Disp	-199.99	{0.01 %}	199.99	**S&H1** Display of analog input signal	
C0573	S&H1-LOAD	Disp				**S&H1** Display of digital input signal	
C0575	SD8 FILTER	1	1	{1 ms}	200	**SD8 monitoring** Tripping delay of error message SD8	

Code		Possible settings				IMPORTANT
No.	Designation	Lenze	Selection			
C0576		100.00	0.00	{0.01 %}	100.00	**nErr monitoring speed window** Setting of the system deviation between actual speed value and speed setpoint
C0577	VP FLD WEAK	3.00	0.00	{0.01 ms]	15.99	**Field weakening controller** $V_{p\ gain}$
C0578	TN FLD WEAK	50.0	2.0	{0.5 ms}	8192,0	**Field weakening controller** Reset time Tn C0578 = 8000 ms: Switched off
C0579	MONIT NERR	3	0 1 2 3	TRIP Message Warning Off		**nEEr monitoring** Configuration of ”system deviation between actual speed value and speed setpoint” monitoring
C0580	MONIT SD8	3	0 3	TRIP Off		**SD8 monitoring** Configuration of ”Encoder error at X8” monitoring
C0581	MONIT EER	0	0 1 2 3	TRIP Message Warning Off		**EEr monitoring** Configuration of ”external fault” monitoring
C0582	MONIT OH4	2	2 3	Warning Off		**OH4 monitoring** Configuration of heatsink temperature monitoring
C0583	MONIT OH3	→	0 2 3	TRIP Warning Off		**OH3 monitoring** Configuration of ”fixed motor temperature” monitoring → Depends on C0086
C0584	MONIT OH7	→	2 3	Warning Off		**OH7 monitoring** Configuration of ”adjustable motor temperature” monitoring → Depends on C0086 Temperature monitoring via resolver input
C0585	MONIT OH8	3	0 2 3	TRIP Warning Off		**OH8 monitoring** Configuration of ”adjustable motor temperature” monitoring Temperature monitoring via PTC input
C0586	MONIT SD2	0	0 2 3	TRIP Warning Off		**SD2 monitoring** Configuration of resolver monitoring
C0587	MONIT SD3	3	0 2 3	TRIP Warning Off		**SD3 monitoring** Configuration of ”encoder at X9” monitoring
C0588	MONIT H10/H11	0	0 2 3	TRIP Warning Off		**H10/H11 monitoring** Setting C0588 = 2 or C0588 = 3 only allowed for Lenze service
C0589	MONIT P03	2	0 2 3	TRIP Warning Off		**P03 monitoring** Configuration of following error monitoring ● The following error is monitored by the DFSET function block. The monitoring is only active if DFSET is used.

Code		Possible settings				IMPORTANT	
No.	Designation	Lenze	Selection				
C0590	MONIT P13	0	0 2 3	TRIP Warning Off		**P13 monitoring** Configuration of angle error monitoring ● The following error is monitored by the DFSET function block. The monitoring is only active if DFSET is used.	
C0591	MONIT CE1	3	0 2 3	TRIP Warning Off		**CE1 monitoring** Configuration of ”CAN-IN1 fault” monitoring	
C0592	MONIT CE2	3	0 2 3	TRIP Warning Off		**CE2 monitoring** Configuration of ”CAN-IN2 error” monitoring	
C0593	MONIT CE3	3	0 2 3	TRIP Warning Off		**CE3 monitoring** Configuration of ”CAN-IN3 error” monitoring	
C0594	MONIT SD6	→	0 2 3	TRIP Warning Off		**SD6 monitoring** Configuration of ”motor temperature sensor” monitoring → Depends on C0086	
C0595	MONIT CE4	3	0 2 3	TRIP Warning Off		**CE4 monitoring** Configuration of ”CAN bus off” monitoring	
C0596	NMAX LIMIT	5500	0	{1 rpm}	16000	**System speed monitoring**	
C0597	MONIT LP1	3	0 2 3	TRIP Warning Off		**LP1 monitoring** Configuration of motor phase failure monitoring	
C0598	MONIT SD5	3	0 2 3	TRIP Warning Off		**SD5 monitoring** Configuration monitoring master current at X5/1.2 < 2mA	
C0599	LIMIT LP 1	5.0	1.0	{0.1 %}	10.0	**LP1 monitoring** Current limit value for motor phase monitoring	
C0600	FUNCTION	1	0 1 2 3 4 5	OUT = IN1 IN1 + IN2 IN1 - IN2 IN1 * IN2 IN1 / IN2 IN1/(100% - IN2)		**ARIT2** Function selection	See system manual (extension)
C0601 STOP					→ Selection list 1	**ARIT2** Configuration of analog input signals	
1	ARIT2-IN1	1000	FIXED0%				
2	ARIT2-IN2	1000	FIXED0%				
C0602		Disp	-199.99	{0.01 %}	199.99	**ARIT2** Display of analog input signals	
1	ARIT2-IN1						
2	ARIT2-IN2						
C0606	MONIT OC8	2	0 2 3	TRIP Warning Off		**OC8 monitoring** Configuration of the $I^2 \times t$ advance warning ● The threshold is set in C0127	

Code		Possible settings				IMPORTANT	
No.	Designation	Lenze	Selection				
C0610 STOP					→ × Selection list 1	**ADD1** Configuration of analog input signals	See system manual (extension)
1	ADD1-IN1	1000	FIXED0%				
2	ADD1-IN2	1000	FIXED0%				
3	ADD1-IN3	1000	FIXED0%				
C0611		Disp	-199.99	{0.01 %}	199.99	**ADD1** Display of analog input signals	
1	ADD1-IN1						
2	ADD1-IN2						
3	ADD1-IN3						
C0620	DB1 GAIN	1.00	-10.00	{0.01}	10.00	**DB1** Gain	See system manual (extension)
C0621	DB1 VALUE	1.00	0.00	{0.01 %}	100.00	**DB1** Dead band	
C0622 STOP	DB1-IN	1000	FIXED0%		→ Selection list 1	**DB1** Configuration - analog input signal	
C0623	DB1-IN	Disp	-199.99	{0.01 %}	199.99	**DB1** Display of analog input signal	
C0630	MAX LIMIT	100.00	-199.99	{0.01 %}	199.99	**LIM1** Upper limit of the limiter	See system manual (extension)
C0631	MIN LIMIT	-100.0	-199.99	{0.01 %}	199.99	**LIM1** Lower limit of the limiter	
C0632 STOP	LIM1-IN	1000	FIXED0%		→ Selection list 1	**LIM1** Configuration - analog input signal	
C0633	LIM1-IN	Disp	-199.99	{0.01 %}	199.99	**LIM1** Display of analog input signal	
C0640	PT1-1-DELAY T	20.00	0.01	{0.01 s}	50.00	**PT1-1** Setting of the time constant	See system manual (extension)
C0641 STOP	PT1-1-IN	1000	FIXED0%		→ selection list 1	**PT1-1** Configuration - analog input signal	
C0642	PT1-1-IN	Disp	-199.99	{0.01 %}	199.99	**PT1-1** Display of analog input signal	
C0650	DT1-1-GAIN	1.000	-320.00	{0.01}	320.00	**DT1-1** Gain	See system manual (extension)
C0651	DT1-1-DELAY T	1.000	0.005	{0.001 s}	5.000	**DT1-1** Time constant	
C0652 STOP	DT1-1-IN	1000	FIXED0%		→ Selection list 1	**DT1-1** Configuration - analog input signal	
C0653	DT1-1-SENSIBILITY	1	1 15 bits 2 14 bits 3 13 bits 4 12 bits 5 11 bits 6 10 bits 7 9 bits			**DT1-1** Sensitivity	
C0654	DT1-1-IN	Disp	-199.99	{0.01 %}	199.99	**DT1-1** Display of analog input signal	

Code		Possible settings				IMPORTANT	
No.	Designation	Lenze	Selection				
C0655	CONV5-NUMERATOR	1	-32767	{1}	32767	**CONV5** Numerator	See system manual (extension)
C0656	CONV5-DENOMINATOR	1	1	{1}	32767	**CONV5** Denominator	
C0657 STOP	CONV5-IN	1000	FIXED0%		→ Selection list 1	**CONV5** Configuration - analog input signal	
C0658	CONV5-IN	Disp	-199.99	{0.01 %}	199.99	**CONV5** Display of analog input signal	
C0661 STOP	ABS1-IN	1000	FIXED0%		→ Selection list 1	**ABS1** Configuration - analog input signal ● Input for absolute value generators	See system manual (extension)
C0662	ABS1-IN	Disp	-199.99	{0.01 %}	199.99	**ABS1** Display of analog input signal	
C0671	RFG1-TIR	0.000	0.000	{0.01 s}	999.900	**RFG1** Acceleration time T_{ir}	See system manual (extension)
C0672	RFG1-TIF	0.000	0.000	{0.01 s}	999.900	**RFG1** Deceleration time T_{if}	
C0673 STOP	RFG1-IN	1000	FIXED0%		→ Selection list 1	**RFG1** Configuration - analog input signal	
C0674 STOP	RFG1-SET	1000	FIXED0%		→ Selection list 1	**RFG1** Configuration - analog input signal	
C0675 STOP	RFG1-LOAD	1000	FIXED0		→ selection list 2	**RFG1** Configuraton of digital input signal	
C0676		Disp	-199.99	{0.01 %}	199.99	**RFG1** Display of analog input signals	
1	RFG1-IN						
2	RFG1-SET						
C0677	RFG1-LOAD	Disp				**RFG1** Display of digital input signal	
C0680	CMP1-FUNCTION	6	1 IN1 = IN 2 2 IN 1 > IN2 3 IN 1 < IN2 4 |IN1| = |IN2| 5 |IN1| > |IN2| 6 |IN1| < |IN2|			**CMP1** Function selection ● Comparison of inputs IN1 and IN2	See system manual (extension)
C0681	CMP1-HYSTERESIS	1.00	0.00	{0.01 %}	100.00	**CMP1** Hysteresis	
C0682	CMP1-WINDOW	1.00	0.00	{0.01 %}	100.00	**CMP1** Window	
C0683 STOP					→ Selection list 1	**CMP1** Configuration of analog input signals	
1	CMP1-IN1	5001	MCTRL-NACT				
2	CMP1-IN2	19500	FCODE-17				
C0684		Disp	-199.99	{0.01 %}	199.99	**CMP1** Display of analog input signals	
1	(C0683/1)						
2	(C0683/1)						

Code		Possible settings				IMPORTANT	
No.	Designation	Lenze	Selection				
C0685	CMP2-FUNCTION	1	1 2 3 4 5 6	IN1 = IN2 IN 1 > IN2 IN 1 < IN2 |IN1| = |IN2| |IN1| > |IN2| |IN1| < |IN2|		**CMP2** Function selection ● Comparison of inputs IN1 and IN2	See system manual (extension)
C0686	CMP2-HYSTERESIS	1.00	0.00	{0.01 %}	100.00	**CMP2** Hysteresis	
C0687	CMP2-WINDOW	1.00	0.00	{0.01 %}	100.00	**CMP2** Window	
C0688 STOP					→ Selection list 1	**CMP2** Configuration of analog input signals	
1	CMP2-IN1	1000	FIXED0%				
2	CMP2-IN2	1000	FIXED0%				
C0689		Disp	-199.99	{0.01 %}	199.99	**CMP2** Display of analog input signals	
1	CMP2-IN1						
2	CMP2-IN2						
C0690	CMP3-FUNCTION	1	1 2 3 4 5 6	IN1 = IN 2 IN 1 > IN2 IN 1 < IN2 |IN1| = |IN2| |IN1| > |IN2| |IN1| < |IN2|		**CMP3** Function selection ● Comparison of inputs IN1 and IN2	See system manual (extension)
C0691	CMP3-HYSTERESIS	1.00	0.00	{0.01 %}	100.00	**CMP3** Hysteresis	
C0692	CMP3-WINDOW	1.00	0.00	{0.01 %}	100.00	**CMP3** Window	
C0693 STOP					→ Selection list 1	**CMP3** Configuration of analog input signals	
1	CMP3-IN1	1000	FIXED0%				
2	CMP3-IN2	1000	FIXED0%				
C0694		Disp	-199.99	{0.01 %}	199.99	**CMP3** Display of analog input signals	
1	CMP3-IN1						
2	CMP3-IN2						
C0700 STOP	ANEG1-IN	19523	FCODE-472/3		→ Selection list 1	**ANEG1** Configuration - analog input signal	See system manual (extension)
C0701	ANEG1-IN	Disp	-199.99	{0.01 %}	199.99	**ANEG1** Display of analog input signal	
C0703 STOP	ANEG2-IN	1000	FIXED0%		→ Selection list 1	**ANEG2** Configuration - analog input signal	See system manual (extension)
C0704	ANEG2-IN	Disp	-199.99	{0.01 %}	199.99	**ANEG2** Display of analog input signal	

Code		Possible settings				IMPORTANT	
No.	Designation	Lenze	Selection				
C0710	TRANS1-FUNCTION	0	0 1 2	Rising edge Falling edge Both edges		**TRANS1** Edge evaluation ● In the case of a corresponding signal edge at IN, OUT switches to HIGH	See system manual (extension)
C0711	TRANS1-PULSE T	0.001	0.001	{0.001 s}	60.000	**TRANS1** Pulse duration	
C0713 STOP	TRANS1-IN	1000	FIXED0		→ selection list 2	**TRANS1** Configuraton of digital input signal	
C0714	TRANS1-IN	Disp				**TRANS1** Display of digital input signal	
C0715	TRANS2-FUNCTION	0	0 1 2	Rising edge Falling edge Both edges		**TRANS2** Edge evaluation ● In the case of a corresponding signal edge at IN, OUT switches to HIGH	See system manual (extension)
C0716	TRANS2-PULSE T	0.001	0.001	{0.001 s}	60.000	**TRANS2** Pulse duration	
C0718 STOP	TRANS2-IN	1000	FIXED0		→ selection list 2	**TRANS2** Configuraton of digital input signal	
C0719	TRANS2-IN	Disp				**TRANS2** Display of digital input signal	
C0720	DIGDEL1-FUNCTION	2	0 1 2	On delay Off delay On/off delay		**DIGDEL1** Function selection	See system manual (extension)
C0721	DIGDEL1-DELAY T	1.000	0.001	{0.001 s}	60.000	**DIGDEL1** Setting of the delay time	
C0723 STOP	DIGDEL1-IN	1000	FIXED0		→ selection list 2	**DIGDEL1** Configuraton of digital input signal	
C0724	DIGDEL1-IN	Disp				**DIGDEL1** Display of digital input signal	
C0725	DIGDEL2-INFUNCTION	2	0 1 2	On delay Off delay On/off delay		**DIGDEL2** Function selection	See system manual (extension)
C0726	DIGDEL2-DELAY T	1.000	0.001	{0.001 s}	60.000	**DIGDEL2** Setting of the delay time	
C0728 STOP	DIGDEL2-IN	1000	FIXED0		→ selection list 2	**DIGDEL2** Configuraton of digital input signal	
C0729	DIGDEL2-IN	Disp				**DIGDEL2** Display of digital input signal	
C0730	OSZ MODUS	0	0 1	Start measurement Stop measurement		**OSC** Start / stop of the measured value recording	See system manual (extension)
C0731	OSC STATUS	0	0 1 2 3 4 5	Measurement completed Measurement active Trigger detected Abort Abort after trigger Read memory		**OSC** Current operating status	

Code		Possible settings				IMPORTANT	
No.	Designation	Lenze	Selection				
C0732 STOP					→ Selection list 1	**OSC** Configuration of analog input signals	See system manual (extension)
1	OSC CHANNEL1	1000	FIXED0%				
2	OSC CHANNEL2	1000	FIXED0%				
3	OSC CHANNEL3	1000	FIXED0%				
4	OSC CHANNEL4	1000	FIXED0%				
C0733					→ selection list 2	**OSC** Trigger input	
1	OSC-TRIG INP	1000	FIXED0				
C0734	TRIG-SOURCE	1	0 1 2 3 4	Digital trigger input Measuring channel 1 Measuring channel 2 Measuring channel 3 Measuring channel 4		**OSC** Selection of trigger source	See system manual (extension)
C0735	TRIGGER-LEVEL	0	-32767	{1}	32767	**OSC** Setting of trigger level for channels 1 ... 4	
C0736	TRIGGER-SLOPE	0	0 1	LOW/HIGH edge HIGH/LOW edge		**OSC** Selection of the trigger edge	
C0737	TRIGGER-DELAY	0.0	-100.0	{0.1 %}	999.9	**OSC** Setting of pre- and post-triggering	
C0738	PROBE PERIOD	3	3 4 5 6 7 8 9 10 11 12 13 14 15 16 17 18 19 20 21	1 ms 2 ms 5 ms 10 ms 20 ms 50 ms 100 ms 200 ms 500 ms 1 s 2 s 5 s 10 s 20 s 50 s 1 min 2 min 5 min 10 min		**OSC** Selection of the sampling period	See system manual (extension)
C0739	NUMBER OF CHANNELS	4	1	{1}	4	**OSC** Number of channels to be measured	See system manual (extension)
C0740	DATA READ					**OSC**	
1		0	0	{1}	65535	Define the starting point for reading the data memory. This enables a selective access to a memory block	
2		0	0 1	Inhibit "Read data" Enable "Read data"		Inhibit "Read memory"	

Code		Possible settings				IMPORTANT	
No.	Designation	Lenze	Selection				
C0741						**OSC**	See system manual (extension)
1	VERSION OSC	Disp				Version	
2	LENGTH MEMORY					Memory size	
3	DATA WIDTH					Data width	
4	NO. CHANNELS					Number of channels	
C0742	LENGTH OF DB	Disp				**OSC** Show data block length	
C0743	READ DB	Disp				**OSC** Reading of an 8-byte data block	
C0744	MEM: DEPTH	2048	0 1 2 3 4 5 6	512 measured values 1024 measured values 1536 measured values 2048 measured values 3072 measured values 4096 measured values 8192 measured values		**OSC** Adapt memory depth to the measuring task	
C0749		Disp				**OSC** Information on the storage of the measured values	See system manual (extension)
1	BRK:OFF INDEX						
2	TRIGGER INDEX						
3	END INDEX						
C0750	DFRFG1-VP DENOM	16	1 2 4 8 16 34 64 128 256 512 1024 2048 4096 8192 16384	$V_p = 1$ $V_p = 1/2$ $V_p = 1/4$ $V_p = 1/8$ $V_p = 1/16$ $V_p = 1/32$ $V_p = 1/64$ $V_p = 1/128$ $V_p = 1/256$ $V_p = 1/512$ $V_p = 1/1024$ $V_p = 1/2048$ $V_p = 1/4096$ $V_p = 1/8192$ $V_p = 1/16384$		**DFRFG1** Denominator of the position controller gain V_p	See system manual (extension)
C0751	DFRFG1-DFRFG1 TIR	1.000	0.001	{0.001 s}	999.900	**DFRFG1** Acceleration time T_{ir}	See system manual (extension)
C0752	DFRFG1-MAX SPEED	3000	1	{1 rpm}	16000	**DFRFG1** Maximum speed (here: maximum compensation speed)	
C0753	DFRFG1-DFRFG1 QSP	0.000	0.000	{0.001 s}	999.900	**DFRFG1** Deceleration time T_{if} if the deceleration ramp is activated	
C0754	DFRFG1-PH ERROR	$2 \cdot 10^9$	10	{1}	$2 \cdot 10^9$	**DFRFG1** Following error	
C0755	SYN WINDOW	100	0	{1 inc}	65535	**DFRFG1** Synchronisation window	

Code		Possible settings				IMPORTANT	
No.	Designation	Lenze	Selection				
C0756	DFRFG1-OFFSET	0	$-1 \cdot 10^9$	{1 inc}	$1 \cdot 10^9$	**DFRFG1** Offset	See system manual (extension)
C0757	DFRFG1-FUNCTION	0	0 1	No TP start With TP start		**DFRFG1** Function selection	
C0758 STOP	DFRFG1-IN	1000	FIXEDPHI-0		→ Selection list 4	**DFRFG1** Configuration of input signal	
C0759 STOP	DFRFG1-QSP	1000	FIXED0		→ selection list 2	**DFRFG1** Configuraton of digital input signal	
C0760 STOP	DFRFG1-STOP	1000	FIXED0		→ selection list 2	**DFRFG1-STOP** Configuraton of digital input signal ”Ramp function generator stop”	
C0761 STOP	DFRFG1-RESET	1000	FIXED0		→ selection list 2	**DFRFG1** Configuraton of digital input signal Reset integrators	
C0764		Disp				**DFRFG1** Display of digital input signals	
1	DFRFG1-QSP						
2	DFRFG1-STOP						
3	DFRFG1-RESET						
C0765	DFRFG1-IN	Disp	-32767	{1 rpm}	32767	**DFRFG1** Display of input signal	
C0766	DFRFG1-SPEED DIR	1	1 2 3	Direction of rotation cw/ccw CW rotation (to the right) CCW rotation (to the left)		**DFRFG1** Selection of the direction of rotation	
C0770 STOP	FLIP1-D	1000	FIXED0		→ selection list 2	**FLIP1** Data input Configuraton of digital input signal	See system manual (extension)
C0771 STOP	FLIP1-CLK	1000	FIXED0		→ selection list 2	**FLIP1** Configuration of clock input signal	
C0772 STOP	FLIP1-CLR	1000	FIXED0		→ selection list 2	**FLIP1** Configuration of reset input signal	
C0773		Disp				**FLIP1** Display of digital input signals	
1	FLIP1-D						
2	FLIP1-CLK						
3	FLIP1-CLR						
C0775 STOP	FLIP2-D	1000	FIXED0		→ selection list 2	**FLIP2** Data input Configuraton of digital input signal	See system manual (extension)
C0776 STOP	FLIP2-CLK	1000	FIXED0		→ selection list 2	**FLIP2** Configuration of clock input signal	
C0777 STOP	FLIP2-CLR	1000	FIXED0		→ selection list 2	**FLIP2** Configuration of reset input signal	
C0778		Disp				**FLIP2** Display of digital input signals	
1	FLIP2-D						
2	FLIP2-CLK						
3	FLIP2-CLR						

Code		Possible settings			IMPORTANT	
No.	Designation	Lenze	Selection			
C0780 STOP	NSET-N	1000	FIXED0%	→ Selection list 1	**NSET** Configuration main setpoint input	See system manual (extension)
C0781 STOP	NSET-N-INV	1000	FIXED0	→ selection list 2	**NSET** Configuration main setpoint inversion	
C0782 STOP	NSET-NADD	1000	FIXED0%	→ Selection list 1	**NSET** Configuration additional setpoint input	
C0783 STOP	NSET-NADD-INV	1000	FIXED0	→ selection list 2	**NSET** Configuration of additional setpoint inversion	
C0784 STOP	NSET-CINH-VAL	1000	FIXED0%	→ Selection list 1	**NSET** Configuration of output signal with inhibited controller	
C0785 STOP	NSET-SET	1000	FIXED0%	→ Selection list 1	**NSET** Configuration ramp function generator	See system manual (extension)
C0786 STOP	NSET-LOAD	1000	FIXED0	→ selection list 2	**NSET** Configuration of digital input (load ramp function generator)	
C0787 STOP				→ selection list 2	**NSET** Configuration of JOG selection and JOG activation ● Binary interpretation	
1	NSET-JOG*1	1000	FIXED0			
2	NSET-JOG*2	1000	FIXED0			
3	NSET-JOG*4	1000	FIXED0			
4	NSET-JOG*8	1000	FIXED0			
C0788 STOP				→ selection list 2	**NSET** Configuration of Ti selection and Ti activation ● Binary interpretation ● T_{ir} and T_{if} are equal	See system manual (extension)
1	NSET-TI*1	1000	FIXED0			
2	NSET-TI*2	1000	FIXED0			
3	NSET-TI*4	1000	FIXED0			
4	NSET-TI*8	1000	FIXED0			
C0789 STOP	NSET-RFG-0	1000	FIXED0	→ selection list 2	**NSET** Digital input (ramp function generator 0)	
C0790 STOP	NSET-RFG-STOP	1000	FIXED0	→ selection list 2	**NSET** Digital input (ramp function generator stop)	

Code		Possible settings				IMPORTANT	
No.	Designation	Lenze	Selection				
C0798		Disp	-199.99	{0.01 %}	199.99	**NSET** Display of analog input signals	See system manual (extension)
1	NSET-CINH-VAL						
2	NSET-SET						
C0799		Disp				**NSET** Display of digital input signals	
1	NSET-N-INV						
2	NSET-NADD-INV						
3	NSET-LOAD						
4	NSET-JOG*1						
5	NSET-JOG*2						
6	NSET-JOG*4						
7	NSET-JOG*8						
8	NSET-TI*1						
9	NSET-TI*2						
10	NSET-TI*4						
11	NSET-TI*8						
12	NSET-RFG-0						
13	NSET-RFG-STOP						
C0800 STOP	PCTRL1-SET	1000	FIXED0%		→ Selection list 1	**PCTRL1** Configuration of setpoint input signal	See system manual (extension)
C0801 STOP	PCTRL1-ACT	1000	FIXED0%		→ Selection list 1	**PCTRL1** Configuration of actual value input signal	
C0802 STOP	PCTRL1-INFLU	1000	FIXED0%		→ Selection list 1	**PCTRL1** Configuration of evaluation input signal	
C0803 STOP	PCTRL1-ADAPT	1000	FIXED0%		→ Selection list 1	**PCTRL1** Configuration of adaptation input signal	
C0804 STOP	PCTRL1-INACT	1000	FIXED0		→ selection list 2	**PCTRL1** Configuration of inactivation input signal	
C0805 STOP	PCTRL1-I-OFF	1000	FIXED0		→ selection list 2	**PCTRL1** Configuration of digital input signal (switch-off I component)	See system manual (extension)
C0808		Disp	-199.99	{0.01 %}	199.99	**PCTRL1** Display of analog input signals	
1	PCTRL1-SET						
2	PCTRL1-ACT						
3	PCTRL1-INFLU						
4	PCTRL1-ADAPT						
C0809		Disp				**PCTRL1** Display of digital input signals	
1	PCTRL1-INACT						
2	PCTRL1-I-OFF						

Code		Possible settings				IMPORTANT	
No.	Designation	Lenze	Selection				
C0810 STOP					→ Selection list 1	**ASW1** Configuration of analog input signals	See system manual (extension)
1	ASW1-IN1	1000	FIXED0%				
2	ASW1-IN2	1000	FIXED0%				
C0811 STOP	ASW1-SET	1000	FIXED0		→ selection list 2	**ASW1** Configuraton of digital input signal	
C0812		Disp	-199.99	{0.01 %}	199.99	**ASW1** Display of analog input signals	
1	ASW1-IN1						
2	ASW1-IN2						
C0813	ASW1-SET	Disp				**ASW1** Display of digital input signal	
C0815 STOP					→ Selection list 1	**ASW2** Configuration of analog input signals	
1	ASW2-IN1	1000	FIXED0%				
2	ASW2-IN2	1000	FIXED0%				
C0816 STOP	ASW2-SET	1000	FIXED0		→ selection list 2	**ASW2** Configuraton of digital input signal	
C0817		Disp	-199.99	{0.01%}	199.99	**ASW2** Display of analog input signals	
1	ASW2-IN1						
2	ASW2-IN2						
C0818	ASW2-SET	Disp				**ASW2** Display of digital input signal	
C0820 STOP					→ selection list 2	**AND1** Configuration of digital input signals	See system manual (extension)
1	AND1-IN	1000	FIXED0				
2	AND1-IN	1000	FIXED0				
3	AND1-IN	1000	FIXED0				
C0821		Disp				**AND1** Display of digital input signals	
1	AND1-IN1						
2	AND1-IN2						
3	AND1-IN3						
C0822 STOP		1000			→ selection list 2	**AND2** Configuration of digital inputs	See system manual (extension)
1	AND2-IN	1000	FIXED0				
2	AND2-IN	1000	FIXED0				
3	AND2-IN	1000	FIXED0				
C0823		Disp				**AND2** Display of digital input signals	
1	AND2-IN1						
2	AND2-IN2						
3	AND2-IN3						

Code		Possible settings		IMPORTANT	
No.	Designation	Lenze	Selection		
C0824 STOP			→ selection list 2	**AND3** Configuration of digital input signals	See system manual (extension)
1	AND3-IN1	1000	FIXED0		
2	AND3-IN2	1000	FIXED0		
3	AND3-IN3	1000	FIXED0		
C0825		Disp		**AND3** Display of digital input signals	
1	AND3-IN1				
2	AND3-IN2				
3	AND3-IN3				
C0826 STOP			→ selection list 2	**AND4** Configuration of digital input signals	See system manual (extension)
1	AND4-IN1	1000	FIXED0		
2	AND4-IN2	1000	FIXED0		
3	AND4-IN3	1000	FIXED0		
C0827		Disp		**AND4** Display of digital input signals	
1	AND4-IN1				
2	AND4-IN2				
3	AND4-IN3				
C0828 STOP			→ selection list 2	**AND5** Configuration of digital inputs	See system manual (extension)
1	AND5-IN1	1000	FIXED0		
2	AND5-IN2	1000	FIXED0		
3	AND5-IN3	1000	FIXED0		
C0829		Disp		**AND5** Display of digital input signals	
1	AND5-IN1				
2	AND5-IN2				
3	AND5-IN3				
C0830 STOP			→ selection list 2	**OR1** Configuration of digital input signals	See system manual (extension)
1	OR1-IN1	1000	FIXED0		
2	OR1-IN2	1000	FIXED0		
3	OR1-IN3	1000	FIXED0		
C0831		Disp		**OR1** Display of digital input signals	
1	OR1-IN1				
2	OR1-IN2				
3	OR1-IN3				
C0832 STOP			→ selection list 2	**OR2** Configuration of digital input signals	See system manual (extension)
1	OR2-IN1	1000	FIXED0		
2	OR2-IN2	1000	FIXED0		
3	OR2-IN3	1000	FIXED0		
C0833		Disp		**OR2** Display of digital input signals	
1	OR2-IN1				
2	OR2-IN2				
3	OR2-IN3				

Code		Possible settings		IMPORTANT	
No.	Designation	Lenze	Selection		
C0834 STOP			→ selection list 2	**OR3** Configuration of digital input signals	See system manual (extension)
1	OR3-IN1	1000	FIXED0		
2	OR3-IN2	1000	FIXED0		
3	OR3-IN3	1000	FIXED0		
C0835		Disp		**OR3** Display of digital input signals	
1	OR3-IN1				
2	OR3-IN2				
3	OR3-IN3				
C0836 STOP			→ selection list 2	**OR4** Configuration of digital input signals	See system manual (extension)
1	OR4-IN1	1000	FIXED0		
2	OR4-IN2	1000	FIXED0		
3	OR4-IN3	1000	FIXED0		
C0837		Disp		**OR4** Display of digital input signals	
1	OR4-IN1				
2	OR4-IN2				
3	OR4-IN3				
C0838 STOP			→ selection list 2	**OR5** Configuration of digital input signals	See system manual (extension)
1	OR5-IN1	1000	FIXED0		
2	OR5-IN2	1000	FIXED0		
3	OR5-IN3	1000	FIXED0		
C0839		Disp		**OR5** Display of digital input signals	
1	OR5-IN1				
2	OR5-IN2				
3	OR5-IN3				
C0840 STOP	NOT1-IN	1000	FIXED0 → selection list 2	**NOT1** Configuraton of digital input signal	See system manual (extension)
C0841	NOT1-IN	Disp		**NOT1** Display of digital input signal	
C0842 STOP	NOT2-IN	1000	FIXED0 → selection list 2	**NOT2** Configuraton of digital input signal	See system manual (extension)
C0843	NOT2-IN	Disp		**NOT2** Display of digital input signal	
C0844 STOP	NOT3-IN	1000	FIXED0 → selection list 2	**NOT3** Configuraton of digital input signal	See system manual (extension)
C0845	NOT3-IN	Disp		**NOT3** Display of digital input signal	
C0846 STOP	NOT4-IN	1000	FIXED0 → selection list 2	**NOT4** Configuraton of digital input signal	See system manual (extension)
C0847	NOT4-IN	Disp		**NOT4** Display of digital input signal	
C0848 STOP	NOT5-IN	1000	FIXED0 → selection list 2	**NOT5** Configuraton of digital input signal	See system manual (extension)
C0849	NOT5-IN	Disp		**NOT5** Display of digital input signal	

Code		Possible settings				IMPORTANT	
No.	Designation	Lenze	Selection				
C0850 STOP					→ Selection list 1	**AIF-OUT** Configuration process output words for automation interface AIF (X1)	See system manual (extension)
1	AIF1OUT.W1	1000	FIXED0%				
2	AIF-OUT.W2	1000	FIXED0%				
3	AIF-OUT.W3	1000	FIXED0%				
C0851 STOP	AIF-OUT.D1	1000	FIXED0INC		→ Selection list 3	**AIF-OUT** Configuration of 32-bit angle information	
C0852	AIF-TYPE OUT.W2	0	0 1 2 3	Analog signal Digital 0-15 D1: LOW angle D2: HIGH angle		**AIF-OUT** Configuration process output word 2 for automation interface AIF (X1)	
C0853	AIF-TYPE OUT.W3	0	0 1 2	Analog signal Digital 16-31 HIGH angle		**AIF-OUT** Configuration - process output word 3 for automation interface AIF (X1)	
C0854	AIF-TYPE OUT.W1	0	0 3	Analog signal D2: LOW phase		**AIF-OUT** Configuration process output word 1 for automation interface AIF (X1)	
C0855		Disp				**AIF-IN** Process input words hexadecimal for automation interface X1	See system manual (extension)
1	AIF-IN (0-15)		Bit 00	{1}	Bit 15		
2	AIF-IN (16-31)		16 bit	{1}	Bit 31		
C0856		Disp	-199	{1 %}	199	**AIF-IN** Decimal process input words Display: 100.00 % = 16384	
1	AIF-IN.W1						
2	AIF-IN.W2						
3	AIF-IN.W3						
C0857	AIF-IN.D1	Disp	-2147483648	{1}	2147483647	**AIF-IN** 32-bit phase information	
C0858		Disp	-199.99	{0.01 %}	199.99	**AIF-OUT** Process output words Display: 100 % = 16384	See system manual (extension)
1	AIF-OUT.W1						
2	AIF-OUT.W2						
3	AIF-OUT.W3						
C0859	AIF-OUT.D1	Disp	-2147483648	{1}	2147483647	**AIF-OUT** 32-bit phase information	

Code		Possible settings		IMPORTANT	
No.	Designation	Lenze	Selection		
C0860 STOP			→ Selection list 1	**CAN-OUT** Configuration of process output words	See system manual (extension)
1	CAN-OUT1.W1	5001			
2	CAN-OUT1.W2	1000	FIXED0%		
3	CAN-OUT1.W3	1000	FIXED0%		
4	CAN-OUT2.W1	1000	FIXED0%		
5	CAN-OUT2.W2	1000	FIXED0%		
6	CAN-OUT2.W3	1000	FIXED0%		
7	CAN-OUT2.W4	1000	FIXED0%		
8	CAN-OUT3.W1	1000	FIXED0%		
9	CAN-OUT3.W2	1000	FIXED0%		
10	CAN-OUT3.W3	1000	FIXED0%		
11	CAN-OUT3.W4	1000	FIXED0%		
C0861 STOP			→ Selection list 3	**CAN-OUT** Configuration of 32-bit angle information	
1	CAN-OUT1.D1	1000	FIXED0INC		
2	CAN-OUT2.D1	1000	FIXED0INC		
3	CAN-OUT3.D1	1000	FIXED0INC		
C0863		Disp	0 1	**CAN-IN** Display of process input words, hexadecimal	See system manual (extension)
1	CAN-IN1 (0-15)				
2	CAN-IN1 (16-31)				
3	CAN-IN2 (0-15)				
4	CAN-IN2 (16-31)				
5	CAN-IN3 (0-15)				
6	CAN-IN3 (16-31)				
C0864			0 Analog signal 1 Digital 0-15 2 LOW angle	**CAN-OUT** Configuration of process output words	See system manual (extension)
1	CAN-OUT1.W2	0			
2	CAN-OUT2.W1	0			
3	CAN-OUT3.W1	0			
C0865			0 Analog signal 1 Digital 16-31 2 HIGH angle	**CAN-OUT** Configuration of process output words	
1	CAN-OUT1.W3	0			
2	CAN-OUT2.W2	0			
3	CAN-OUT3.W2	0			

Code		Possible settings				IMPORTANT	
No.	Designation	Lenze	Selection				
C0866		Disp	-32768,00	{0.01%}	32767,00	**CAN-IN** Process input words Display: 100 % = 16384	See system manual (extension)
1	CAN-IN1.W1						
2	CAN-IN1.W2						
3	CAN-IN1.W3						
4	CAN-IN2.W1						
5	CAN-IN2.W2						
6	CAN-IN2.W3						
7	CAN-IN2.W4						
8	CAN-IN3.W1						
9	CAN-IN3.W2						
10	CAN-IN3.W3						
11	CAN-IN3.W4						
C0867		Disp				**CAN-IN** 32-bit phase information	
1	CAN-IN1.D1						
2	CAN-IN2.D1						
3	CAN-IN3.D1						
C0868		Disp	-199.99	{0.01%}	199.99	**CAN-OUT** Process output words Display: 100 % = 16384	See system manual (extension)
1	CAN-OUT1.W1						
2	CAN-OUT1.W2						
3	CAN-OUT1.W3						
4	CAN-OUT2.W1						
5	CAN-OUT2.W2						
6	CAN-OUT2.W3						
7	CAN-OUT2.W4						
8	CAN-OUT3.W1						
9	CAN-OUT3.W2						
10	CAN-OUT3.W3						
11	CAN-OUT3.W4						
C0869		Disp	-2147483648	{1}	2147483647	**CAN-OUT** 32-bit phase information	
1	CAN-OUT1.D1						
2	CAN-OUT2.D1						
3	CAN-OUT3.D1						
C0870 STOP					→ selection list 2	**DCTRL** Configuration of digital input signals (inhibit controller)	See system manual (extension)
1	DCTRL-CINH1	1000	FIXED0				
2	DCTRL-CINH2	1000	FIXED0				
C0871 STOP	DCTRL-TRIP-SET	1000	FIXED0		→ selection list 2	**DCTRL** Configuraton of digital input signal	
C0876 STOP	DCTRL-TRIP-RES	55	DIGIN5		→ selection list 2	**DCTRL** Configuraton of digital input signal	

Code		Possible settings			IMPORTANT	
No.	Designation	Lenze	Selection			
C0878		Disp			**DCTRL** Display of digital input signals	See system manual (extension)
1	DCTRL-CINH1					
2	DCTRL-CINH2					
3	DCTRL-TRIP-SET					
4	DCTRL-TRIP-RES					
C0879			0 No reset 1 Reset		**DCTRL** Reset control words	
1	RESET C135	0				
2	RESET AIF	0				
3	RESET CAN	0				
C0885 STOP	R/L/Q-R	1000	FIXED0	→ selection list 2	**R/L/Q** Configuration of digital input signal (CW rotation)	See system manual (extension)
C0886 STOP	R/L/Q-L	1000	FIXED0	→ selection list 2	**R/L/Q** Configuration of digital input signal (CCW rotation)	
C0889		Disp			**R/L/Q** Display of digital input signals	
1	R/L/Q-L					
2	R/L/Q-R					
C0890 STOP	N-SET	30020	pos-nout	→ Selection list 1	**MCTRL** Configuration of input signal for speed setpoint	See system manual (extension)
C0891 STOP	MCTRL-M-ADD	30021	pos-Mout	→ Selection list 1	**MCTRL** Configuration of input signal for torque setpoint	
C0892 STOP	MCTRL-LO-M-LIM	5700	ANEG1-OUT	→ Selection list 1	**MCTRL** Configuration of input signal for lower torque limit	
C0893 STOP	MCTRL-HI-M-LIM	19523	FCODE-472/3	→ Selection list 1	**MCTRL** Configuration of input signal for upper torque limit	
C0894 STOP	MCTRL-PHI-SET	30020	POS-POUT	→ Selection list 3	**MCTRL** Configuration of input signal for rotor position setpoint	
C0895 STOP	MCTRL-PHI-LIM	19526	FCODE-472/6	→ Selection list 1	**MCTRL** Configuration of input signal for angle controller limit	
C0896 STOP	MCTRL-N2-LIM	1000	FIXED0%	→ Selection list 1	**MCTRL** Configuration of input signal for 2. speed limitation value	See system manual (extension)
C0897 STOP	MCTRL-PHI-ON	1001	FIXED1	→ selection list 2	**MCTRL** Configuration of switch-on signal for angle controller	
C0898 STOP	MCTRL-FLD-WEAK	1006	FIXED100%	→ Selection list 1	**MCTRL** Configuration of input signal for field weakening	
C0899 STOP	MCTRL-N/M-SWT	1000	FIXED0	→ selection list 2	**MCTRL** Configuration of input signal for the change over between speed and torque control	
C0900 STOP	MCTRL-QSP	1000	FIXED0	→ selection list 2	**MCTRL** Configuration of control signal for activation	

Code		Possible settings				IMPORTANT	
No.	Designation	Lenze	Selection				
C0901 STOP	MCTRL-I-SET	1000	FIXED0%		→ Selection list 1	**MCTRL** Configuration of input signal for loading the I component for the speed controller	See system manual (extension)
C0902 STOP	MCTRL-I-LOAD	1000	FIXED0		→ selection list 2	**MCTRL** Configuration of tripping signal for loading the I component for the speed controller	
C0903 STOP	MCTRL-P-ADAPT	1006	FIXED100%		→ Selection list 1	**MCTRL** Configuration of input signal for adaption of the angle controller	
C0906		Disp	-199.99	{0.01 %}	199.99	**MCTRL** Display of analog input signals	See system manual (extension)
1	MCTRL-N-SET						
2	MCTRL-M-ADD						
3	MCTRL-LO-M-LIM						
4	MCTRL-HI-M-LIM						
5	MCTRL-PHI-LIM						
6	MCTRL-N2-LIM						
7	MCTRL-FLD-WEAK						
8	MCTRL-I-SET						
9	MCTRL-P-ADAPT						
C0907		Disp				**MCTRL** Digital input signals	See system manual (extension)
1	MCTRL-PHI-ON						
2	MCTRL-N/M-SWT						
3	MCTRL-QSP						
4	MCTRL-I-LOAD						
C0908	MCTRL-PHI-SET	Disp	-2147483647	{1 inc}	2147483647	**MCTRL** Display of setpoint angle signal ● 1 rev. = 65536 inc	
C0909	SPEED LIMIT	1	1 +/- 175 % 2 0 ... +175 % 3 -175 ... 0 %			**MCTRL** Rotating direction limitation for speed setpoint	
C0940	CONV1-NUMERATOR	1	-32767	{1}	32767	**CONV1** Numerator	See system manual (extension)
C0941	CONV1-DENOMINATOR	1	1	{1}	32767	**CONV1** Denominator	
C0942 STOP	CONV1-IN	1000	FIXED0%		→ Selection list 1	**CONV1** Configuration of analog input	
C0943	CONV1-IN	Disp	-199.99	{0.01 %}	199.99	**CONV1** Display of analog input signal	
C0945	CONV2-NUMERATOR	1	-32767	{1}	32767	**CONV2** Numerator	See system manual (extension)
C0946	CONV2-DENOMINATOR	1	1	{1}	32767	**CONV2** Denominator	
C0947 STOP	CONV2-IN	1000	FIXED0%		→ Selection list 1	**CONV2** Configuration of analog input	
C0948	CONV2-IN	Disp	-199.99	{0.01 %}	199.99	**CONV2** Display of analog input signal	

Code		Possible settings				IMPORTANT	
No.	Designation	Lenze	Selection				
C0950	CONV3-NUMERATOR	1	-32767	{1}	32767	**CONV3** Numerator	See system manual (extension)
C0951	CONV3-DENOMINATOR	1	1	{1}	32767	**CONV3** Denominator	
C0952 STOP	CONV3-IN	1000	FIXEDPHI-0		→ Selection list 4	**CONV3** Configuration of analog input	
C0953	CONV3-IN	Disp	-32767	{1 rpm}	32767	**CONV3** Display of analog input signal	
C0955	CONV4-NUMERATOR	1	-32767	{1}	32767	**CONV4** Numerator	See system manual (extension)
C0956	CONV4-DENOMINATOR	1	1	{1}	32767	**CONV4** Denominator	
C0957 STOP	CONV4-IN	1000	FIXEDPHI-0		→ Selection list 4	**CONV4** Configuration of analog input	
C0958	CONV4-IN	Disp	-32767	{1 rpm}	32767	**CONV4** Display of analog input signal	
C0960	CURVE-FUNCTION	1	1 Characteristic 1 2 Characteristic 2 3 Characteristic 3			**CURVE** Selection of the characteristic function	See system manual (extension)
C0961	CURVE-Y0	0.00	0.00	{0.01 %}	199.99	**CURVE** Configuration - grid point	
C0962	CURVE-Y1	50.00	0.00	{0.01 %}	199.99	**CURVE** Configuration - grid point	
C0963	CURVE-Y2	75.00	0.00	{0.01 %}	199.99	**CURVE** Configuration - grid point	
C0964	CURVE-Y100	100.00	0.00	{0.01 %}	199.99	**CURVE** Configuration - grid point	
C0965	CURVE-X1	50.00	0.01	{0.01 %}	99.00	**CURVE** Configuration - grid point	
C0966	CURVE-X2	75.00	0.01	{0.01 %}	99.00	**CURVE** Configuration - grid point	
C0967 STOP	CURVE-IN	1000	FIXED0%		→ Selection list 1	**CURVE** Configuration of analog input	
C0968	CURVE-IN	Disp	-199.99	{0.01 %}	199.99	**CURVE** Display of analog input signal	
C0990 STOP	PHINT1-IN	1000	FIXEDPHI-0		→ Selection list 4	**PHINT1** Configuration of input signal	See system manual (extension)
C0991 STOP	PHINT1-RESET	1000	FIXED0		→ selection list 2	**PHINT1** Configuration of reset signal	
C0992	PHINT1-IN	Disp	-32767	{1}	32767	**PHINT1** Display of input signal	
C0993	PHINT1-RESET	Disp				**PHINT1** Display of digital input signal	
C0995	PHDIV-DIVISION	0	-31	{1}	31	**PHDIV** Divisor in the power-of-two format (2^{C0995})	See system manual (extension)
C0996 STOP	PHDIV-IN	1000	FIXED0INC		→ Selection list 3	**PHDIV** Configuration of input signal	
C0997	PHDIV-IN	Disp	-2147483647	{1}	2147483647	**PHDIV** Display of input signal	

Code		Possible settings		IMPORTANT	
No.	Designation	Lenze	Selection		
C1000	CONVPPHA1-DIVISION	1	0 {1} 31	**CONVPHA1** Divisor in the power-of-two format (2^{C0995})	See system manual (extension)
C1001 STOP	CONVPPHA1-IN	1000	FIXED0INC → Selection list 3	**CONVPHA1** Configuration of input signal	
C1002	CONVPPHA1-IN	Disp	-2147483647 {1} 2147483647	**CONVPHA1** Display of input signal	
C1010	ARITPH1-FUNCTION	1	0 OUT = IN1 1 IN1 + IN2 2 IN1 - IN2 3 IN1 * IN2 / 2^{30} 13 IN1 * IN2 14 IN1 / IN2 15 IN1 % IN2 21 IN1 + IN2 (no limit) 22 IN1 - IN2 (no limit)	**ARITPH1** Arithmetic function selection	See system manual (extension)
C1011 STOP			→ Selection list 3	**ARITPH1** Configuration of input signals	
1	ARITPH1-IN1	1000	FIXED0INC		
2	ARITPH1-IN2	1000	FIXED0INC		
C1012		Disp	-2147483647 {1} 2147483647	**ARITPH1** Display of input signals	
1	ARITPH1-IN1				
2	ARITPH1-IN2				
C1020	ARITPH2-FUNCTION	1	0 OUT = IN1 1 IN1 + IN2 2 IN1 - IN2 3 IN1 * IN2 / 2^{30} 13 IN1 * IN2 14 IN1 / IN2 15 IN1 % IN2 21 IN1 + IN2 (no limit) 22 IN1 - IN2 (no limit)	**ARITPH2** Arithmetic function selection	See system manual (extension)
C1021 STOP			→ Selection list 3	**ARITPH2** Configuration of input signals	
1	ARITPH2-IN1	1000	FIXED0INC		
2	ARITPH2-IN2	1000	FIXED0INC		
C1022		Disp	-2147483647 {1} 2147483647	**ARITPH2** Display of input signals	
1	ARITPH2-IN1				
2	ARITPH2-IN2				
C1025	ARITPH3-FUNCTION	1	0 OUT = IN1 1 IN1 + IN2 2 IN1 - IN2 3 IN1 * IN2 / 2^{30} 13 IN1 * IN2 14 IN1 / IN2 15 IN1 % IN2 21 IN1 + IN2 (no limit) 22 IN1 - IN2 (no limit)	**ARITPH3** Arithmetic function selection	See system manual (extension)
C1026 STOP			→ Selection list 3	**ARITPH3** Configuration of input signals	
1	ARITPH3-IN1	1000	FIXED0INC		
2	ARITPH3-IN2	1000	FIXED0INC		
C1027		Disp	-2147483647 {1} 2147483647	**ARITPH3** Display of input signals	
1	ARITPH3-IN1				
2	ARITPH3-IN2				

Code		Possible settings				IMPORTANT	
No.	Designation	Lenze	Selection				
C1090	FEVAN1-OUTPUT SIGNAL	Disp	-2147483648	{1}	2147483647	**FEVAN1** Display of output signal	See system manual (extension)
C1091	FEVAN1-CODE	141	2	{1}	2000	**FEVAN1** Selection target code	
C1092	FEVAN1-SUBCODE	0	0	{1}	255	**FEVAN1** Selection of the target subcode	
C1093	FEVAN1-NUMERATOR	1.0000	0.0001	{0.0001}	100000,0000	**FEVAN1** Numerator	
C1094	FEVAN1-DENOMIATOR	0.0001	0.0001	{0.0001}	100000,0000	**FEVAN1** Denominator	
C1095	FEVAN1-OFFSET	0	0	{1}	1000000000	**FEVAN1** Offset setting	
C1096 STOP	FEVAN1-IN	1000	FIXED0%		→ Selection list 1	**FEVAN1** Configuration - analog input signal	See system manual (extension)
C1097 STOP					→ selection list 2	**FEVAN1** Configuration of digital input signals	
1	FEVAN1-LOAD	1000	FIXED0				
2	FEVAN1-BUSY-IN	1000	FIXED0				
3	FEVAN1-FAIL-IN	1000	FIXED0				
C1098	FEVAN1-IN	Disp	-32768	{1}	32767	**FEVAN1** Display of analog input signal	See system manual (extension)
C1099		Disp				**FEVAN1** Display of digital input signals	
1	FEVAN1-LOAD						
2	FEVAN1-BUSY-IN						
3	FEVAN1-FAIL-IN						
C1100	FCNT1-FUNCTION	1				**FCNT1** Function selection	See system manual (extension)
			1	Return		If |counter content| ≥ |FCNT1-CMP-Val|, FCNT1-EQUAL is set to HIGH for 1 ms	
			2	Hold if >=		If |counter content| ≥ |FCNT1-CMP-Val|, the counter stops	
			3	Hold if =		If |counter content| = |FCNT1-CMP-Val|, the counter stops	
C1101 STOP					→ Selection list 1	**FCNT1** Configuration of analog input signals	See system manual (extension)
1	FCNT1-LD-VAL	1000	FIXED0%				
2	FCNT1-CMP-VAL	1000	FIXED0%				
C1102 STOP					→ selection list 2	**FCNT1** Configuration of digital input signals	
1	FCNT1-CLKUP	1000	FIXED0				
2	FCNT1-CLKDWN	1000	FIXED0				
3	FCNT1-LOAD	1000	FIXED0				

Code		Possible settings		IMPORTANT	
No.	Designation	Lenze	Selection		
C1103		Disp	-32768 {1} 32768	**FCNT1** Display of analog input signals	See system manual (extension)
1	FCNT1-LD-VAL				
2	FCNT1-CMP-VAL				
C1104		Disp		**FCNT1** Display of digital input signals	
1	FCNT1-CLKUP				
2	FCNT1-CLKDWN				
3	FCNT1-LOAD				
C1105	FCNT2-FUNCTION	1		**FCNT2** Function selection	See system manual (extension)
			1 Return	If |counter content| ≥ |FCNT2-CMP-Val|, FCNT2-EQUAL is set to HIGH for 1 ms	
			2 Hold if >=	If |counter content| ≥ |FCNT2-CMP-Val|, the counter stops	
			3 Hold if =	If |counter content| = |FCNT2-CMP-Val|, the counter stops	
C1106 STOP			→ Selection list 1	**FCNT2** Configuration of analog input signals	See system manual (extension)
1	FCNT2-LD-VAL	1000	FIXED0%		
2	FCNT2-CMP-VAL	1000	FIXED0%		
C1107 STOP			→ selection list 2	**FCNT2** Configuration of digital input signals	
1	FCNT2-CLKUP	1000	FIXED0		
2	FCNT2-CLKDWN	1000	FIXED0		
3	FCNT2-LOAD	1000	FIXED0		
C1108		Disp	-32768 {1} 32768	**FCNT2** Display of analog input signals	See system manual (extension)
1	FCNT2-LD-VAL				
2	FCNT2-CMP-VAL				
C1109		Disp		**FCNT2** Display of digital input signals	
1	FCNT2-CLKUP				
2	FCNT2-CLKDWN				
3	FCNT2-LOAD				
C1110	FCNT3-FUNCTION	1		**FCNT3** Function selection	See system manual (extension)
			1 Return	If |counter content| ≥ |FCNT3-CMP-Val|, FCNT3-EQUAL is set to HIGH for 1 ms	
			2 Hold if >=	If |counter content| ≥ |FCNT3-CMP-Val|, the counter stops	
			3 Hold if =	If |counter content| = |FCNT3-CMP-Val|, the counter stops	

Code		Possible settings				IMPORTANT	
No.	Designation	Lenze	Selection				
C1111 STOP					→ Selection list 1	**FCNT3** Configuration of analog input signals	See system manual (extension)
1	FCNT3-LD-VAL	1000	FIXED0%				
2	FCNT3-CMP-VAL	1000	FIXED0%				
C1112 STOP					→ selection list 2	**FCNT3** Configuration of digital input signals	
1	FCNT3-CLKUP	1000	FIXED0				
2	FCNT3-CLKDWN	1000	FIXED0				
3	FCNT3-LOAD	1000	FIXED0				
C1113		Disp	-32768	{1}	32768	**FCNT3** Display of analog input signals	See system manual (extension)
1	FCNT3-LD-VAL						
2	FCNT3-CMP-VAL						
C1114		Disp				**FCNT3** Display of digital input signals	
1	FCNT3-CLKUP						
2	FCNT3-CLKDWN						
3	FCNT3-LOAD						
C1120	SYNC MODE	2	0 1 2	Sync switched off CAN Sync activated Terminal Sync activated		**SYNC1** Function	See system manual (extension)
C1121 STOP			0	{1 ms}	13	**SYNC1** The interpolation is restarted with every sync signal.	
1	SYNC CYCLE	2				Definition of the cycle time of the sync signals (in the slave); only for system bus	
2	INTERPOL. CYCL	2				Definition of the interpolation time between the sync signals (in the slave), only for terminal	
C1122	SYNC TIME	0.460	0.000	{0.001 ms}	10.000	**SYNC1** Phase shift between CAN Sync and internal control program cycle ● Only for system bus ● Depending on the baud rate and bus load	See system manual (extension)
C1123			-0.450	{0.001 ms}	0.450	**SYNC1**	See system manual (extension)
1	PHASESHIFT	0.000				Phase shift between Terminal Sync and internal control program cycle ● Only for terminal sync	
2	SYNC WINDOW	0.200				Synchronisation window for synchronisation edge of the Terminal Sync (LOW-HIGH edge) ● Only for terminal sync ● When the Sync signal is in the window, SYNCx-STAT switches to HIGH	

Code		Possible settings				IMPORTANT	
No.	Designation	Lenze	Selection				
C1124 STOP	SYNC1-IN1	1000	FIXED0%		→ Selection list 1	**SYNC1** Configuration - analog input signal	See system manual (extension)
C1125 STOP	SYNC1-IN2	1000	FIXED0INC		→ Selection list 3	**SYNC1** Configuration of input signal	
C1126 STOP	SYNC1-IN3	1000	FIXED0%		→ Selection list 1	**SYNC1** Configuration - analog input signal	
C1127	SYNC1-IN1	Disp	-2147483647	{1}	2147483647	**SYNC1** Display of analog input signal	
C1128	SYNC1-IN2	Disp	-2147483647	{1}	2147483647	**SYNC1** Display of input signal	
C1129	SYNC1-IN3	Disp	-2147483647	{1}	2147483647	**SYNC1** Display of analog input signal	
C1130 STOP					→ Selection list 1	**CONVPHPH2** Configuration of analog input signals	See system manual (extension)
1	CONVPHPH2-NUM	1000	FIXED0%				
2	CONVPHPH2-DEN	1000	FIXED0%				
C1131 STOP	CONVPHPH2-ACT	1000	FIXED0		→ selection list 2	**CONVPHPH2** Configuraton of digital input signal	
C1132 STOP	CONVPHPH2-IN2	1000	FIXED0INC		→ Selection list 3	**CONVPHPH2** Configuration of input signal	
C1135		Disp				**CONVPHPH2** Display of analog input signals	
1	CONVPHPH2-NUM						
2	CONVPHPH2-DEN						
C1136	CONVPHPH2-ACT	Disp				**CONVPHPH2** Display of digital input signal	
C1137	CONVPHPH2-IN2	Disp	-2147483647	{1}	2147483647	**CONVPHPH2** Display of input signal	
C1160 STOP					→ Selection list 1	**ASW3** Configuration of analog input signals	See system manual (extension)
1	ASW3-IN1	1000	FIXED0%				
2	ASW3-IN2	1000	FIXED0%				
C1161 STOP	ASW3-SET	1000	FIXED0		→ selection list 2	**ASW3** Configuraton of digital input signal	
C1162		Disp	-199.99	{0.01 %}	199.99	**ASW3** Display of analog input signals	
1	ASW3-IN1						
2	ASW3-IN2						
C1163	ASW3-SET	Disp				**ASW3** Display of digital input signal	

Code		Possible settings			IMPORTANT	
No.	Designation	Lenze	Selection			
C1165 STOP				→ Selection list 1	**ASW4** Configuration of analog input signals	See system manual (extension)
1	ASW4-IN1	1000	FIXED0%			
2	ASW4-IN2	1000	FIXED0%			
C1166 STOP	ASW4-SET	1000	FIXED0	→ selection list 2	**ASW4** Configuraton of digital input signal	
C1167		Disp	-199.99 {0.01 %} 199.99		**ASW4** Display of analog input signals	
1	ASW4-IN1					
2	ASW4-IN2					
C1168	ASW4-SET	Disp			**ASW4** Display of digital input signal	
C1180	IDENT MODE	0	0	Inactive	**Control parameter identification**	
			1	Calculate control parameters	Calculate control parameters from data set	
			2	Identify	Identify plant parameters	
			3	Identify & calculate	Identify plant parameters and calculate control parameters	

Code		Possible settings			IMPORTANT
No.	Designation	Lenze	Selection		
C1181	ID STATE	Disp			**Status of the control parameter identification**
			0	Not activated / completed	
			1	Busy	Control parameters are identified
			2	Error: Calculation not possible (C1187/C1188)	Control parameter calculation not possible ● Check whether the plant parameters are set reasonably (C1187/C1188)
			3	Error: Identification not possible (C1182-C1185)	Too few scanning points registered ● Change basic conditions of the movement (C1182-C1185) – Increase torque, increase number of revolutions, increase speed, reduce torque rise time
			4	Error: Reference torque C0057 too low	Reference torque too low ● Increase I_{max} (C0022) ● Check max. torque (C0057)
			5	Error: Speed at start not zero	Speed at start ≠ 0 ● Stop drive and reactivate function
			6	Error: Controller inhibit during motion	Controller inhibit during motion ● Repeat identification
			7	Error: Torque ramp in C1185 too long	Minimum braking torque not reached, torque ramp too flat, or max. torque too low ● Change basic conditions of the movement (C1182-C1185) – Increase torque, increase number of revolutions, increase speed, reduce torque rise time
			8	Error: Identification too long (C1184-C1185)	Time overflow ● Increase torque, reduce torque rise time
			9	Error: Unfavourable entries (C1182-C1185)	Blocking ● Release brake, check motor cable, eliminate blocking
			10	Waiting for enable to start the movement	
			11	Waiting for end of movement	
			12	Waiting for controller inhibit for completion	
			99	Internal error	
C1182	PHI-ID PHASE	100.0	0.5	{0.1 rev} 3000.0	**Control parameter identification** ● Selection of the number of revolutions
C1183	N-ID MAX	100	10	{1 %} 100	**Control parameter identification** ● Selection of the speed ● 100 % = n_{max}

Code		Possible settings				IMPORTANT	
No.	Designation	Lenze	Selection				
C1184	M-ID MAX	100	10	{1 %}	100	**Control parameter identification** ● Selection of the torque ● 100 % = M_{max}	
C1185	M RISETIME	100	10	{1 ms}	10000	**Control parameter identification** ● Selection of the torque rise time	
C1186	OPTIMISE ID	0	0 1	Optimum control Fault		**Control parameter identification** ● Optimisation of the control parameter identification	
C1187	INERTIA	0.0	0.0	{0.1 kg*cm²}	214000.0	**Control parameter identification** Plant parameters ● Inertia	
C1188	FRICTION	0	0	{1 %}	100	**Control parameter identification** Plant parameters ● Part of friction load (proportional to speed)	
C1190	MOTOR PTC SELECTION	0				**Temperature characteristic for PTC thermistors** Selection of the characteristic for PTC thermistors at X7 or X8 for detecting the motor temperature	
			0	Standard		Characteristic for PTC thermistors in Lenze motors	
			1	Characteristic		Characteristic for application-specific PTC thermistors	
C1191	CHAR.: TEMPERATURE 1		0	{1 °C}	255	**Temperature range for PTC thermistors** Define temperature points on the characteristic for PTC thermistors	
1	CHAR.: TEMP 1	100				Temperature point 1	
2	CHAR.: TEMP 2	150				Temperature point 2	
C1192	CHAR.: RESISTANCE 1		0	{1 Ω}	3000	**Resistance range for PTC thermistors** Define resistance points on the characteristic for PTC thermistors	
1	CHAR.: OHM 1	1670				Resistance point 1	
2	CHAR.: OHM 2	2225				Resistance point 2	
C1195 STOP	AIF-OUT.D2	1000	FIXED0INC		→ Selection list 3	**AIF-OUT** Configuration of phase input signal	See system manual (extension)
C1196	AIF-OUT.D2	Disp	-2147483647	{1}	2147483647	**AIF-OUT** Display of input signal	
C1197	AIF-IN.D2	Disp				**AIF-IN** Display of input signal	See system manual (extension)
C1202	RATIO NUM.	1	1	{1}	65535	**Gearbox factor numerator** $i = \frac{C1202}{C1203} = \frac{n_{motor}}{n_{gearbox_output}}$	See system manual (extension)
C1203	RATIO DENUM.	1	1	{1}	65535	**Gearbox factor denominator**	

Code		Possible settings				IMPORTANT	
No.	Designation	Lenze	Selection				
C1204	FEED CONSTANT	1.0000	0.0001	{0.0001}	214000,0000	**Feed constant** ● Feed of the machine in units per revolution of the load side of the gearbox.	See system manual (extension)
C1205	POS. RESOLUT.	Disp	0	{0.0001 inc/unit}	214000.0000	**Position resolution** ● The position resolution indicates the number of increments which resolve a unit determined by the user.	See system manual (extension)
C1206 STOP	SET POLARITY	0	0 1	Not inverted Inverted		**Polarity of position setpoint** ● Reversal of the position direction	See system manual (extension)
C1207			1	{1}	65335	**Position encoder - gearbox factor** ● Gearbox factor between motor and position encoder ● Numerator/denominator corresponds to motor speed/encoder speed ● Encoder to motor shaft: 1/1	See system manual (extension)
1	FDBK RAT NUM	1					
2	FDBK RAT DEN	1					
C1208	ACT POLARITY	0	0 1	Not inverted Inverted		**Polarity - actual position** ● >Inversion of the actual position, e.g. when using a separate position encoder behind the gearbox.	See system manual (extension)
C1209	REF END-POINT	0	0 1 61 71 101	Ref-point Real-0 VTPOS-No 060 VTPOS-No 070 VTPOS-No 100		**Homing end point** ● Point where the drive is to be positioned after homing	See system manual (extension)
C1210	POS. MODE	0	0 1 2	Absolute positioning Relative positioning Absolute positioning with saving		**Positioning mode** ● If C1210 = 0, relative and absolute positioning processes can be carried out ● If C11210 = 1, only relative positioning processes can be carried out	See system manual (extension)
C1211	START PS NO.	1	1	{1}	32	**Program set number** ● Program set with which processing of the positioning program is to be started ● The program start is effected after an edge at the input "PRG-START"	See system manual (extension)
C1212	ACT. PS NO.	Disp	0 1 2 ... 31 32	Prog. end PS 01 PS 02 ... PS 31 PS 32		**Program set number** ● Display of the actual program set number	See system manual (extension)

Code		Possible settings				IMPORTANT	
No.	Designation	Lenze	Selection				
C1213	REF. MODE	0			Travel direction	**Homing mode** ● Mode for homing (valid for manual mode and program homing).	📖 6.13-1 See system manual (extension)
			0	+home	positive	Move to reference point via homing switch	
			1	-home	negative		
			2	+LIM,-home	positive	Approach end of travel range limit switch, reverse and move to reference point via homing switch	
			3	-LIM,+home	negative		
			4	+MARK,-home	positive	Move to homing switch, reverse and move to reference point	
			5	-MARK,+home	negative		
			6	+MARK,+TP	positive	Move to TP signal via reference switch	
			7	-MARK,-TP	negative		
			8	+TP	positive	Directly travel to TP signal	
			9	-TP	negative		
			10	+LIM,-TP	positive	Move to the travel range limit switch, reverse there, and reference to TP	
			11	-LIM,+TP	negative		
C1214	REF TP-INPUT	4	1 2 3 4	TP-IN = X5/E1 TP-IN = X5/E2 TP-IN = X5/E3 TP-IN = X5/E4		**Homing touch probe** ● Selection of the touch probe input (TP-IN) for homing acc. to modes 6...9. When using an incremental encoder, the TP input X5/E4 is particularly suitable.	See system manual (extension)
C1215			0 1	LOW/HIGH edge HIGH/LOW edge		**TP input edge** ● Selection of the edge for the touch probe input terminals. (Applies to homing acc. to modes 6...9, TP positioning, TP storage)	See system manual (extension)
1	TP-TRANS	0					
2	TP-TRANS	0					
3	TP-TRANS	0					
4	TP-TRANS	0					
C1216	V-REF2 ACTIVE.	0	0 1	inactive active		**Homing speed** Activation of 2nd speed	See system manual (extension)
C1218			0	{0.0001 units}	214000.0000	**POS** Following error tolerance	See system manual (extension)
1	FOL.TOLERANCE	4,0000					
2	FOL.TOLERANCE	1.0000					

Code		Possible settings				IMPORTANT	
No.	Designation	Lenze	Selection				
C1220		Disp	-214000.0000	{0.0001 units}	214000.0000	**POS** Display in units	See system manual (extension)
1	POS-TARGET					Actual target position	
2	POS-SETPOS					Actual position setpoint	
3	POS-ACTPOS					Actual position	
4	ACT.FOLLOW ERR					Actual following error	
5	ACTPOS ABS.					Actual position (absolute value)	
6	REFMARK 0-IMP					Distance between REF-MARK and index pulse	
7	ACT.HOME OFFS					Actual reference dimension offset	
8	ACT.HOME POS.					Actual home position	
9	ACT. WAY					Actual path (path still to be positioned)	
10	ACT. C1223					Real internal values of codes C1223, C1224, C1240, C1250 (internal limitation possible: see error message P18 in the chapter ”Troubleshooting and fault messages	
11	ACT. C1224						
12	ACT. C1240						
13	ACT. C1250						
14	ACT. VNORM					Actual value Vnorm Internal value for fault analysis	
15	ACT. ANORM					Actual value Anorm Internal value for fault analysis	
16	POS-ABS-VAL					Actual position (without offset)	
C1221		Disp	-2147483647	{1 inc}	2147483647	**POS** Display in increments	See system manual (extension)
1	POS-TARGET					Actual target position	
2	POS-SETPOS					Actual position setpoint	
3	POS-ACTPOS					Actual position	
4	ACT.FOLLOW ERR					Actual following error	
5	ACTPOS ABS.					Read in absolute value	
6	REFMARK 0-IMP					Distance of REF-MARK to index pulse	
7	ACT.HOME OFFS					Actual reference dimension offset	
8	ACT.HOME POS.					Actual home position	
9	ACT. WAY					Path still to be positioned	
10	ACT. C1223					Real internal values of codes C1223, C1224, C1240, C1250 (internal limitation possible: see error message P18 in the chapter ”Troubleshooting and fault messages	
11	ACT. C1224						
12	ACT. C1240						
13	ACT. C1250						
14	ACT. VNORM					Actual value Vnorm Internal value for fault analysis	
15	ACT. ANORM					Actual value Anorm Internal value for fault analysis	
16	POS-ABS-VAL					Actual position (without offset)	

Code		Possible settings				IMPORTANT	
No.	Designation	Lenze	Selection				
C1223 STOP	POS. LIMIT+	16000.0000	0	{0.0001 units}	214000.0000	**POS** Position limit positive	See system manual (extension)
C1224 STOP	POS. LIMIT-	-16000.0000	-214000.0000	{0.0001 units}	0	**POS** Position limit negative	
C1225	HOME OFFSET	0	-214000.0000	{0.0001 units}	214000.0000	**POS** Homing measure offset	
C1227	HOME POSITION	0	-214000.0000	{0.0001 units}	214000.0000	**POS** Home position	See system manual (extension)
C1240	V-MAX	50.0000	0.0001	{0.0001units/s}	214000.0000	**POS** Max. speed v_{max}	See system manual (extension)
C1241	V-HOMING 2	2.00	0.01	{0.01 %vmax}	100.00	**POS** Second homing speed	
C1242	V-HOMING	5.00	0.01	{0.01 %vmax}	100.00	**POS** Homing speed	
C1243	V-MANUAL	5.00	0.01	{0.01 %vmax}	100.00	**POS** Manual speed	
C1245		Disp	-199.99	{0.01 %vmax}	199.99	**POS** Display of speeds	See system manual (extension)
1	POS-VSET					Actual speed setpoint	
2	POS-VTRAV					Traversing speed of current program set	
3	POS-VFINAL					Final speed of current program set	
C1250	A-MAX	100.0000	0.0001	{0.0001 units/s²}	214000.0000	**POS** Max. acceleration/deceleration a_{max}	
C1251	A-HOMING	10.00	0.01	{0.01 %amax}	100.00	**Acceleration/deceleration of homing**	📖 6.13-1 See system manual (extension)
C1252	A-MANUAL	10.00	0.01	{0.01 %amax}	100.00	**Acceleration/deceleration of manual jog**	See system manual (extension)
C1253	A-CANCEL	100.00	0.01	{0.01 %amax}	100.00	**Deceleration PS-CANCEL** Deceleration of the drive until standstill when the PS is aborted	See system manual (extension)
C1255		Disp	-199.99	{0.01 %amax}	199.99	**POS**	See system manual (extension)
1	POS-ASET					Actual acceleration/deceleration	
2	POS-ACC					Acceleration of current PS	
3	POS-DCC					Deceleration of current PS	
C1256	S-RMP: JERK	1	0.064	{0.001 s}	10	**POS** S-ramp, max. jerk	See system manual (extension)
C1257	S-RMP: FILTER	10	0	{1 rpm}	1000	**S-ramp** PARAM-RD filter	
C1259			0 1	Linear ramp S-ramp		**POS** Mode of the deceleration ramp	See system manual (extension)
1	MODE MAN RAMP	0				Deceleration of manual jog	
2	MODE STP RAMP	0				Deceleration program stop	
3	MODE CANCEL	0				Deceleration of PS-CANCEL	

Code		Possible settings			IMPORTANT	
No.	Designation	Lenze	Selection			
C1260	MANUAL MODE	0	0 1	Without intermediate stop With intermediate stop	**POS** Manual jog mode	See system manual (extension)
C1261			0 1 2 3 ... 104	Inactive VTPOS-No 001 VTPOS-No 002 VTPOS-No 003 ... VTPOS-No 104	**POS** Intermediate stop target, number in VTPOS	
1	MANU-STP-NO	0				
2	MANU-STP-NO	1				
...	...	...				
15	MANU-STP-NO	14				
16	MANU-STP-NO	15				
C1280	POS. CONTROL	0	0 {1} 65535		**POS** Control word positioning	See system manual (extension)
			Bit 0 Bit 1 Bit 2 Bit 3 Bit 4 Bit 5 Bit 6 Bit 7 Bits 8-15	Program start Program stop Program reset Program abort Manual operation Negative manual jog Positive manual jog Manual homing reserved		
C1283	POS. STATUS	Disp	0 5 10 11 12 15 20 25 26 30 35 36 50 51 55 56 57 58 59 62 63 80 85	Program operation Ready to start Started Started-dig Started-rem Started-break Program end Stopped-dig Stopped-rem Stand-by-operation Program reset-dig Program reset-rem Manual operation-dig Manual operation-rem Manual-negative-dig Manual-negative-rem Manual-positive-dig Manual-positive-rem Manual negative and positive active Manual referencing-dig Manual referencing-rem POS-LOOP-INH active POS-PSET-SWT active	**POS** Position status display The state is only updated under the following conditions: ● Power section supplied: DCTRL-RDY = 1 ● No fault: DCTRL-TRIP = 0 DCTRL-FAIL-QSP = 0 ● Drive enabled: DCTRL-CINH = 0 ● No quick stop (QSP) active: MCTRL-QSP-OUT = 0 ● No manual operation active: POS-MANUAL = 0 C1280.B4 = 0	See system manual (extension)
C1284	HOMING-STATUS	Disp	0 1 5 10 11 20 25	No reference Reference known Prg-fct. homing active Manual referencing-dig Manual referencing - C1280 Absolute value encoder External absolute value	**POS** Homing status	See system manual (extension)
C1285			0 4	TRIP Fail-QSP	**Monitoring P01, P02, P04, P05**	📖 8.31
1	MONIT P01	4			Negative limit switch	
2	MONIT P02	4			Positive limit switch	
3	MONIT P04	4			Limit position negative	
4	MONIT P05	4			Limit position positive	

Code		Possible settings			IMPORTANT	
No.	Designation	Lenze	Selection			
C1286			0 TRIP 2 Warning 3 Off 4 Fail-QSP		**Monitoring P14, P15**	📖 8.31
1	MONIT P14	4			1. following error tolerance > C1218/1	
2	MONIT P15	3			2. following error tolerance > C1218/2	
C1287		4	0 TRIP 4 Fail-QSP		**P06 monitoring** No reference	📖 8.31
1	MONIT P06					
C1288		4	0 TRIP 2 Warning 3 Off 4 Fail-QSP		**P12 monitoring** Exceeding the encoder range	
1	MONIT P12					
C1289			0 TRIP 2 Warning 3 Off 4 Fail-QSP		**Monitoring P17, P18**	📖 8.31
1	MONIT P17	4			Control error of touch probe	
2	MONIT P18	2			Internal limitation (display area, position limits, speeds)	
C1290			0 TRIP 2 Warning 3 Off 4 Fail-QSP		**P16 monitoring** Configuration of monitoring in the case of a sync error	📖 8.31
1	MONIT P16	4				
C1291			0 TRIP 4 Fail-QSP		**Monitoring P07, P08, P09**	📖 8.31
1	MONIT P07	4			PS mode absolute instead of relative	
2	MONIT P08	4			Actual reference dimension offset outside position limits	
3	MONIT P09	4			Impermissible programming	
C1292	MONIT P19	2	0 TRIP 2 Warning 3 Off		**P19 monitoring** Configuration of monitoring a limitation of the input value at DFIN	
C1298	P18 DIAGNOSTIC	Disp	0 No P18 source 1 C1223 2 C1224 3 C1240 4 C1250 5 V_norm 6 A_norm		**P18 diagnostics** Display of the code which has led to an internal limitation	📖 8.31
C1299		Disp	0	{1 pcs} 65535	**POS** Display of actual state of piece counter	See system manual (extension)
1	ACT. CNT					
2	ACT. CNT					
...	...					
32	ACT. CNT					
C1301			-214000,0000	{0.0001 units} 214000,0000	**POS** Entry of VTPOS position values	See system manual (extension)
1	VTPOS-VALUE	0				
2	VTPOS-VALUE	0				
...	...	...				
60	VTPOS-VALUE	0				

Code		Possible settings				IMPORTANT	
No.	Designation	Lenze	Selection				
C1302			0.01	{0.01 %vmax}	100.00	**POS** Input VTVEL speeds	See system manual (extension)
1	VTVEL-VALUE	10.00					
2	VTVEL-VALUE	20.00					
...	...	...					
10	VTVEL-VALUE	100.00					
...	...	...					
30	VTVEL-VALUE	100.00					
C1303			0.01	{0.01 %amax}	100.00	**POS** Input of VTACC accelerations/decelerations	See system manual (extension)
1	VTACC-VALUE	10.00					
2	VTACC-VALUE	20.00					
...	...	...					
10	VTACC-VALUE	100.00					
...	...	...					
30	VTACC-VALUE	100.00					
C1304			1	{1 pcs}	65535	**POS** Input VTPCS piece numbers	See system manual (extension)
1	VTPCS-VALUE	1					
...	...	...					
30	VTPCS-VALUE	30					
C1305			0	{0.001 s}	65535.000	**POS** Input VTTIME waiting times	See system manual (extension)
1	VTTIME-VALUE	1.000					
...	...	...					
30	VTTIME-VALUE	30.000					
C1311			0	No positioning/special function		**POS** Program set mode	See system manual (extension)
1	PS MODE	0	1	Absolute PS			
2	PS MODE	0	2	Relative PS			
3	PS MODE	0	3	Homing			
4	PS MODE	0	4	Set home position			
5	PS MODE	0	5	Set position value to target position (C1312)			
6	PS MODE	0	6	Absolute PS, TP positioning with E01			
7	PS MODE	0	7	Absolute PS, TP positioning with E02			
...	...	...	8	Absolute PS, TP positioning with E03			
25	PS MODE	0	9	Absolute PS, TP positioning with E04			
25	PS MODE	0	11	Relative PS, TP positioning with E01			
26	PS MODE	0	12	Relative PS, TP positioning with E02			
27	PS MODE	0	13	Relative PS, TP positioning with E03			
28	PS MODE	0	14	Relative PS, TP positioning with E04			
29	PS MODE	0	16	Acceptance of home position (C1227)			
28	PS MODE	0	30	Stand-by operation, cancel with STDBY-STP			
29	PS MODE	0	31	Stand-by operation, abort with TP E01 (+residual path)			
30	PS MODE	0	32	Stand-by operation, abort with TP E02 (+residual path)			
31	PS MODE	0	33	Stand-by operation, abort with TP E03 (+residual path)			
32	PS MODE	0	34	Stand-by operation, abort with TP E04 (+residual path)			

Code		Possible settings			IMPORTANT	
No.	Designation	Lenze	Selection			
C1312			0	Real zero	**POS** Program set target position, number in VTPOS	See system manual (extension)
1	TARGET-NO	0	1	VTPOS-No 001		
2	TARGET-NO	0	2	VTPOS-No 002		
...	...	...	3	VTPOS-No 003		
32	TARGET-NO	0	...	...		
			104	VTPOS-No 104		
C1313			0	v-max	**POS** Program set traversing speed, number in VTVEL	See system manual (extension)
1	V-TRAVEL-NO	0	1	VTVEL-No 01		
2	V-TRAVEL-NO	0	2	VTVEL-No 02		
...	...	...	3	VTVEL-No 03		
32	V-TRAVEL-NO	0	...	...		
			34	VTVEL-No 34		
C1314			0	a-max	**POS** Program set acceleration, number in VTACC	See system manual (extension)
1	ACC-NO	0	1	VTACC-No 01		
2	ACC-NO	0	2	VTACC-No 02		
...	...	...	3	VTACC-No 03		
32	ACC-NO	0	...	...		
			34	VTACC-No 34		
C1315			0	a-max	**POS** Program set deceleration, number in VTACC	See system manual (extension)
1	DCC-NO	0	1	VTACC-No 01		
2	DCC-NO	0	2	VTACC-No 02		
...	...	...	3	VTACC-No 03		
32	DCC-NO	0	...	...		
			34	VTACC-No 34		
C1316			0	Standstill	**POS** Program set final speed, number in VTVEL	See system manual (extension)
1	V-FINAL-NO	0	1	VTVEL-No 01		
2	V-FINAL-NO	0	2	VTVEL-No 02		
...	...	...	3	VTVEL-No 03		
32	V-FINAL-NO	0	...	...		
			34	VTVEL-No 34		
C1318			0	Inactive	**POS** Wait for PFI, number of the PFI)	See system manual (extension)
1	WAIT-PFI-NO	0	1	PFI 01		
2	WAIT-PFI-NO	0	2	PFI 02		
...	...	...	...	...		
32	WAIT-PFI-NO	0	32	PFI 32		
C1319			0	LOW level	**POS** Level for Wait-PFI	See system manual (extension)
			1	HIGH level		
1	WAIT-LEVEL	0				
2	WAIT-LEVEL	0				
...	...	...				
32	WAIT-LEVEL	0				
C1320			0	Inactive	**POS** First switching PFO, number of the PFO ● PFO1: Setting an output BEFORE the positioning	See system manual (extension)
			1	PFO 01		
1	PFO1-NO	0	2	PFO 02		
			3	PFO 03		
2	PFO1-NO	0	...	...		
			31	PFO 31		
			32	PFO 32		
...	...	...	100	All PFO's		
			101	PFO 01 ... 08		
			102	PFO 09 ... 16		
32	PFO1-NO	0	103	PFO 17 ... 24		
			104	PFO 25 ... 32		

Code		Possible settings			IMPORTANT	
No.	Designation	Lenze	Selection			
C1321			0 1	LOW level HIGH level	**POS** First switching PFO level	See system manual (extension)
1	PFO1-LEVEL	0				
2	PFO1-LEVEL	0				
...	...	...				
32	PFO1-LEVEL	0				
C1322			0 1 2 3 ... 31 32 100 101 102 103 104	Inactive PFO 01 PFO 02 PFO 03 ... PFO 31 PFO 32 All PFOs PFO 01 ... 08 PFO 09 ... 16 PFO 17 ... 24 PFO 25 ... 32	**POS** Second switching PFO, number of the PFO ● PFO2: Setting an output AFTER the positioning	See system manual (extension)
1	PFO2-NO	0				
2	PFO2-NO	0				
...	...	...				
32	PFO2-NO	0				
C1323			0 1	LOW level HIGH level	**POS** Second switching PFO level	See system manual (extension)
1	PFO2-LEVEL	0				
2	PFO2-LEVEL	0				
...	...	...				
32	PFO2-LEVEL	0				
C1324			0 1 2 3 ... 34	Inactive VTTIME-No 01 VTTIME-No 02 VTTIME-No 03 ... VTTIME-No 34	**POS,** Waiting time, number in VTTIME	See system manual (extension)
1	WAITTIME-NO	0				
2	WAITTIME-NO	0				
...	...	...				
32	WAITTIME-NO	0				
C1325			0 1 2 ... 32	Inactive PFI 01 PFI 02 ... PFI 32	**POS** Number of a PFI for branch 1	See system manual (extension)
1	JMP1-PFI-NO	0				
2	JMP1-PFI-NO	0				
...	...	...				
32	JMP1-PFI-NO	0				
C1326			0 1	LOW level HIGH level	**POS** Level of a PFI for branch 1	See system manual (extension)
1	JMP1-LEVEL	0				
2	JMP1-LEVEL	0				
...	...	...				
32	JMP1-LEVEL	0				
C1327			0 1 2 3 ... 32	Prg.-end Ps 01 Ps 02 Ps 03 ... Ps 32	**POS** Branch 1 to a program set	See system manual (extension)
1	JMP1-PS	0				
2	JMP1-PS	0				
...	...	...				
32	JMP1-PS	0				
C1328			0 1 2 3 ... 34	Inactive VTPCS-No 01 VTPCS-No 02 VTPCS-No 03 ... VTPCS-No 34	**POS** Selection of a set piece number from VTPCS for the piece number repeat function	See system manual (extension)
1	JMP-PCS-NO	0				
2	JMP-PCS-NO	0				
...	...	...				
32	JMP-PCS-NO	0				

Code		Possible settings			IMPORTANT	
No.	Designation	Lenze	Selection			
C1329			0	Prg.-end	**POS** Branch to a program set if the piece number selected in VTPCS (C1328) has not been reached yet	See system manual (extension)
1	JMP-PCS-PS	0	1	PS 01		
2	JMP-PCS-PS	0	2	PS 02		
...	...	...	3	PS 03		
32	JMP-PCS-PS	0	...	...		
			32	PS 32		
C1330			0	Travel range	**Touch probe window** Selection of a window for touch probe. In this area the touch probe is ”sharp”.	
1	TP WINDOW	0	1	VTPOS-No 001		
2	TP WINDOW	0	2	VTPOS-No 002		
...	...	...	3	VTPOS-No 003		
32	TP WINDOW	0	...	...		
			104	VTPOS-No 104		
C1331			0	Target = TP position	**Residual touch probe path** Selection of a residual path from VTPOS for touch probe	
1	TP DISTANCE	0	1	VTPOS-No 001		
2	TP DISTANCE	0	2	VTPOS-No 002		
...	...	...	3	VTPOS-No 003		
32	TP DISTANCE	0	...	...		
			104	VTPOS-No 104		
C1333			0	Prg.-end	**POS** Branch to a program set if no touch probe has occurred until the target position (C1312) is reached	See system manual (extension)
1	JMP-TP-PS	0	1	PS 01		
2	JMP-TP-PS	0	2	PS 02		
...	...	...	3	PS 03		
32	JMP-TP-PS	0	...	...		
			32	PS 32		
C1334			0	Inactive	**POS** Number of a PFI for branch 2	See system manual (extension)
1	JMP2-PFI-NO		1	PFI 01		
2	JMP2-PFI-NO		2	PFI 02		
...	...		...	...		
32	JMP2-PFI-NO		32	PFI 32		
C1335			0	LOW level	**POS** Level of a PFI for branch 1	See system manual (extension)
			1	HIGH level		
1	JMP2-LEVEL	0				
2	JMP2-LEVEL	0				
...	...	...				
32	JMP2-LEVEL	0				
C1336			0	Prg.-end	**POS** Branch 2 to a program set	See system manual (extension)
1	JMP2-PS	0	1	PS 01		
2	JMP2-PS	0	2	PS 02		
...	...	...	3	PS 03		
32	JMP2-PS	0	...	...		
			32	PS 32		
C1349			0	Prg.-end	**POS** Unconditional branch to a program set	See system manual (extension)
1	JMP-PS	0	1	PS 01		
2	JMP-PS	0	2	PS 02		
...	...	...	3	PS 03		
32	JMP-PS	0	...	...		
			32	PS 32		

Code		Possible settings				IMPORTANT	
No.	Designation	Lenze	Selection				
C1350 STOP					→ Selection list 3	**VTPOS** Configuration of input signals	See system manual (extension)
1	VTPOS-IN1	1000	FIXED0INC				
...	...	...	...				
10	VTPOS-IN10	1000	FIXED0INC				
C1351		Disp	-2147483647	{1 inc}	2147483647	**VTPOS** Display of input signals	
1	VTPOS-IN1						
...	...						
10	VTPOS-IN10						
C1352 STOP					→ Selection list 3	**VTVEL** Configuration of input signals	See system manual (extension)
1	VTVEL-IN1	1000	FIXED0INC				
...	...	...	...				
4	VTVEL-IN4	1000	FIXED0INC				
C1353		Disp	-2147483647	{1}	2147483647	**VTVEL** Display of input signals	
1	VTVEL-IN1						
...	...						
4	VTVEL-IN4						
C1354 STOP					→ Selection list 3	**VTACC** Configuration of input signals	See system manual (extension)
1	VTACC-IN1	1000	FIXED0INC				
...	...	...	...				
4	VTACC-IN4	1000	FIXED0INC				
C1355		Disp	-2147483647	{1}	2147483647	**VTACC** Display of input signals	
1	VTACC-IN1						
...	...						
4	VTACC-IN4						
C1356 STOP					→ Selection list 1	**VTPCS** Configuration of analog input signals	See system manual (extension)
1	VTPCS-IN1	1000	FIXED0%				
...	...	...	...				
4	VTPCS-IN4	1000	FIXED0%				
C1357		Disp	-32768	{1}	32767	**VTPCS** Display of analog input signals	
1	VTPCS-IN1						
...	...						
4	VTPCS-IN4						
C1358					→ Selection list 1	**VTTIME** Configuration of analog input signals	See system manual (extension)
1	VTTIME-IN1	1000	FIXED0%				
...	...	...	...				
4	VTTIME-IN4	1000	FIXED0%				
C1359		Disp	-32768	{1}	32767	**VTTIME** Display of analog input signals	
1	VTTIME-IN1						
...	...						
4	VTTIME-IN4						

Code		Possible settings		IMPORTANT	
No.	Designation	Lenze	Selection		
C1360 STOP			→ selection list 2	**POS** Configuration of digital input signals	See system manual (extension)
1	POS-PRG-START	53	DIGIN3		
2	POS-PRG-STOP	20201	CAN-IN2.B0		
3	POS-PRG-RESET	55	DIGIN5		
4	POS-LIM-NEG	51	DIGIN1		
5	POS-LIM-POS	52	DIGIN2		
6	POS-MANUAL	55	DIGIN5		
7	POS-MANU-NEG	20202	CAN-IN2.B1		
8	POS-MANU-POS	20203	CAN-IN2.B2		
9	POS-MANU-REF	20204	CAN-IN2.B3		
10	POS-REF-MARK	54	DIGIN4		
11	POS-TP1-ENABL-TP1	1000	FIXED0		
12	POS-TP2-ENABL-TP2	1000	FIXED0		
13	POS-TP3-ENABL-TP3	1000	FIXED0		
14	POS-TP4-ENABL-TP4	1000	FIXED0		
15	POS-PS-CANCEL	20208	CAN-IN2.B7		
16	POS-STDBY-STP	20205	CAN-IN2.B4		
17	POS-S-RAMPS	19522	FCODE-471.B1		
18	POS-PARAM-RD	20206	CAN-IN2.B5		
19	POS-LOOP-INH	20207	CAN-IN2.B6		
20	POS-PSET-SWT	1000	FIXED0		
21	POS-ABS-SET	1000	FIXED0		
22	POS-WAITSTATE	1000	FIXED0		

Code		Possible settings		IMPORTANT	
No.	Designation	Lenze	Selection		
C1361		Disp		**POS** Display of digital input signals	See system manual (extension)
1	POS-PRG-START				
2	POS-PRG-STOP				
3	POS-PRG-RESET				
4	POS-LIM-NEG				
5	POS-LIM-POS				
6	POS-MANUAL				
7	POS-MANU-NEG				
8	POS-MANU-POS				
9	POS-MANU-REF				
10	POS-REF-MARK				
11	POS-TP1-ENABL-TP1				
12	POS-TP2-ENABL-TP2				
13	POS-TP3-ENABL-TP3				
14	POS-TP4-ENABL-TP4				
15	POS-PS-CANCEL				
16	POS-STDBY-STP				
17	POS-S-RAMPS				
18	POS-PARAM-RD				
19	POS-LOOP-INH				
20	POS-PSET-SWT				
21	POS-ABS-SET				
22	POS-WAITSTATE				
C1362 STOP			→ Selection list 1	**POS** Configuration of analog input signals	See system manual (extension)
1	POS-START-PS	19517	FCODE-1211		
2	POS-V-OVERRID	1006	FIXED100%		
3	POS-A-OVERRID	1006	FIXED100%		
4	POS-N-IN	1000	FIXED0%		
5	POS-NOUT-GAIN	1006	FIXED100%		
6	POS-M-IN	1000	FIXED0%		
7	POS-MOUT-GAIN	1000	FIXED0%		
8	POS-JERK-RED	1006	FIXED100%		

Code		Possible settings				IMPORTANT	
No.	Designation	Lenze	Selection				
C1363		Disp	-32768	{1}	32767	**POS** Display of analog input signals	See system manual (extension)
1	POS-START-PS						
2	POS-V-OVERRID						
3	POS-A-OVERRID						
4	POS-N-IN						
5	POS-NOUT-GAIN						
6	POS-M-IN						
7	POS-MOUT-GAIN						
8	POS-JERK-RED						
C1364 STOP					→ Selection list 3	**POS** Configuration of input signals	See system manual (extension)
1	POS-PSET-EXT	1000	FIXED0INC				
2	POS-ABS-IN	5000	MCTRL-PHI-ANG				
3	POS-P-IN	1000	FIXED0INC				
C1365		Disp	-2147483647	{1 inc}	2147483647	**POS** Display of input signals	See system manual (extension)
1	POS-PSET-EXT						
2	POS-ABS-IN						
3	POS-P-IN						
C1370 STOP					→ selection list 2	**POS** Configuration of digital input signals	See system manual (extension)
1	POS-PFI	20201	CAN-IN2.B0				
2	POS-PFI	20202	CAN-IN2.B1				
...	...	...	...				
30	POS-PFI	20230	CAN-IN2.B29				
31	POS-PFI	53	DIGIN3				
32	POS-PFI	54	DIGIN4				
C1371		Disp				**POS** Display of digital input signals	
1	POS-PFI-LOW					LOW-WORD	
2	POS-PFI-HIGH					HIGH-WORD	
C1372		Disp				**POS** Display of digital input signals	
1	POS-PFO-LOW					LOW-WORD	
2	POS-PFO-HIGH					HIGH-WORD	
C1380		Disp	-214000.0000	{0.0001 units}	214000.0000	**VTPOS** Display of the table position with the position values	See system manual (extension)
1	VTPOS1						
...	...						
104	VTPOS104						
C1381		Disp	-2147483647	{1 inc}	2147483647	**VTPOS** Display of the table positions with the position values	
1	VTPOS1						
...	...						
104	VTPOS104						

Code		Possible settings				IMPORTANT	
No.	Designation	Lenze	Selection				
C1382		Disp	0.01	{0.01 %vmax}	100.00	**VTVEL** Display of the table positions with the values for the speed in [%] of v_{max}	See system manual (extension)
1	VTVEL1						
...	...						
34	VTVEL34						
C1383		Disp	-2147483647	2^{-14} inc/ms	2147483647	**VTVEL** Display of the table positions with the values for the speed in [inc]	
1	VTVEL1						
...	...						
34	VTVEL34						
C1384		Disp	0.01	{0.01 %amax}	100.00	**VTACC** Display of the table positions with the values for acceleration and deceleration in [%] of a_{max}	See system manual (extension)
1	VTACC1						
...	...						
34	VTACC34						
C1385		Disp	-2147483647	2^{-14} inc/ms^2	2147483647	**VTACC** Display of the table positions with the values for the acceleration and deceleration in [inc]	
1	VTACC1						
...	...						
34	VTACC34						
C1386		Disp	0	{1 pcs}	65535	**VTPCS** Display of the table positions with the piece numbers	See system manual (extension)
1	VTPCS1						
...	...						
34	VTPCS34						
C1387		Disp	0.000	{0.001 s}	65535.000	**VTTIME** Display of the table positions with the waiting times	See system manual (extension)
1	VTTIME1						
...	...						
34	VTTIME34						
C1400 STOP					→ selection list 2	**TEACH1** Configuration of digital input signals	See system manual (extension)
1	TEACH1-SET	1000	FIXED0				
2	TEACH1-NEXT	1000	FIXED0				
3	TEACH1-CLR	1000	FIXED0				
4	TEACH1-LOAD	1000	FIXED0				
C1401 STOP					→ Selection list 3	**TEACH1** Configuration of input signals	
1	TEACH1-L-IN	1000	FIXED0INC				
C1402		Disp	0	{1}	1	**TEACH1** Display of digital input signals	
1	TEACH1-SET						
2	TEACH1-NEXT						
3	TEACH1-CLR						
4	TEACH1-LOAD						
C1403	TEACH1-CNT	Disp	0	{1}	65535	**TEACH1** Display of analog output signal	See system manual (extension)
C1404		Disp	-2147483647	{1 inc}	2147483647	**TEACH1** Display of input signals	
1	TEACH1-L-IN						

Code		Possible settings				IMPORTANT	
No.	Designation	Lenze	Selection				
C1405 STOP					→ Selection list 1	**TEACH1** Configuration - analog input signal	See system manual (extension)
1	TEACH1-LDVAL	1000	FIXED0%				
C1406		Disp	-32768	{1}	32768	**TEACH1** Display of analog input signal	
1	TEACH1-LDVAL						
C1500	OUTPUT SIGNAL	Disp	-2147483648	{1}	2147483647	**FEVAN2** Signal output	See system manual (extension)
C1501	FEVAN2 CODE	141	2	{1}	2000	**FEVAN2** Target code of FEVAN2	
C1502	FEVAN2 SUBCODE	0	0	{1}	255	**FEVAN2** Target subcode FEVAN2	
C1503	FEVAN2 NUMERATOR	1.0000	0.0001	{0.0001}	100000.0000	**FEVAN2** Numerator	
C1504	FEVAN2 DENOMINATOR	0.0001	0.0001	{0.0001}	100000.0000	**FEVAN2** Denominator	
C1505	FEVAN2 OFFSET	0	0		1000000000	**FEVAN2** Offset	
C1506 STOP	FEVAN2-IN	1000	FIXED0%		→ Selection list 1	**FEVAN2** Configuration - analog input signal	See system manual (extension)
C1507 STOP					→ selection list 2	**FEVAN2** Configuration of digital input signals	
1	FEVAN2-LOAD	1000	FIXED0				
2	FEVAN2-BUSY-IN	1000	FIXED0				
3	FEVAN2-FAIL-IN	1000	FIXED0				
C1508	FEVAN2-IN	Disp	-32768	{1}	32767	**FEVAN2** Display of analog input signal	
C1509		Disp				**FEVAN2** Display of digital input signals	
1	FEVAN2-LOAD						
2	FEVAN2-BUSY-IN						
3	FEVAN2-FAIL-IN						
C1510	OUTPUT SIGNAL		-2147483648	{1}	2147483647	**FEVAN3** Signal output	See system manual (extension)
C1511	FEVAN3 CODE	141	2	{1}	2000	**FEVAN3** Target code of FEVAN3	
C1512	FEVAN3 SUBCODE	0	0	{1}	255	**FEVAN3** Target subcode FEVAN3	
C1513	FEVAN3 NUMERATOR	1,0000	0.0001	{0.0001}	100000,0000	**FEVAN3** Numerator	
C1514	FEVAN3 DENOMINATOR	0,0001	0,0001	{0,0001}	100000,0000	**FEVAN3** Denominator	
C1515	FEVAN3 OFFSET	0	0		1000000000	**FEVAN3** Offset	

Code		Possible settings				IMPORTANT	
No.	Designation	Lenze	Selection				
C1516 STOP	FEVAN3-IN	1000	FIXED0%		→ Selection list 1	**FEVAN3** Configuration - analog input signal	See system manual (extension)
C1517 STOP					→ selection list 2	**FEVAN3** Configuration of digital input signals	
1	FEVAN3-LOAD	1000	FIXED0				
2	FEVAN3-BUSY-IN	1000	FIXED0				
3	FEVAN3-FAIL-IN	1000	FIXED0				
C1518	FEVAN3-IN	Disp	-32768	{1}	32767	**FEVAN3** Display of analog input signal	
C1519		Disp				**FEVAN3** Display of digital input signals	
1	FEVAN3-LOAD						
2	FEVAN3-BUSY-IN						
3	FEVAN3-FAIL-IN						
C1520	OUTPUT SIGNAL		-2147483648	{1}	2147483647	**FEVAN4** Signal output	See system manual (extension)
C1521	FEVAN4 CODE	141	2	{1}	2000	**FEVAN4** Target code of FEVAN4	
C1522	SUBCODE	0	0	{1}	255	**FEVAN4** Target subcode FEVAN4	
C1523	FEVAN4 NUMERATOR	1.0000	0.0001	{0.0001}	100000.0000	**FEVAN4** Numerator	
C1524	FEVAN4 DENOMINATOR	0.0001	0.0001	{0.0001}	100000.0000	**FEVAN4** Denominator	
C1525	FEVAN4 OFFSET	0	0		1000000000	**FEVAN4** Offset	
C1526 STOP	FEVAN4-IN	1000	FIXED0%		→ Selection list 1	**FEVAN4** Configuration - analog input signal	See system manual (extension)
C1527 STOP					→ selection list 2	**FEVAN4** Configuration of digital input signals	
1	FEVAN4-LOAD	1000	FIXED0				
2	FEVAN4-BUSY-IN	1000	FIXED0				
3	FEVAN4-FAIL-IN	1000	FIXED0				
C1528	FEVAN4-IN	Disp	-32768	{1}	32767	**FEVAN4** Display of analog input signal	
C1529		Disp				**FEVAN4** Display of digital input signals	
1	FEVAN4-LOAD						
2	FEVAN4-BUSY-IN						
3	FEVAN4-FAIL-IN						

Code		Possible settings				IMPORTANT	
No.	Designation	Lenze	Selection				
C1530	OUTPUT SIGNAL		-2147483648	{1}	2147483647	**FEVAN5** Signal output	See system manual (extension)
C1531	FEVAN5 CODE	141	2	{1}	2000	**FEVAN5** Target code of FEVAN5	
C1532	FEVAN5 SUBCODE	0	0	{1}	255	**FEVAN5** Target subcode FEVAN5	
C1533	FEVAN5 NUMERATOR	1.0000	0.0001	{0.0001}	100000.0000	**FEVAN5** Numerator	
C1534	FEVAN5 DENOMINATOR	0.0001	0.0001	{0.0001}	100000.0000	**FEVAN5** Denominator	
C1535	FEVAN5 OFFSET	0	0		1000000000	**FEVAN5** Offset	
C1536 STOP	FEVAN5-IN	1000	FIXED0%		→ Selection list 1	**FEVAN5** Configuration - analog input signal	See system manual (extension)
C1537 STOP					→ selection list 2	**FEVAN5** Configuration of digital input signals	
1	FEVAN5-LOAD	1000	FIXED0				
2	FEVAN5-BUSY-IN	1000	FIXED0				
3	FEVAN5-FAIL-IN	1000	FIXED0				
C1538	FEVAN5-IN	Disp	-32768	{1}	32767	**FEVAN5** Display of analog input signal	
C1539		Disp				**FEVAN5** Display of digital input signals	
1	FEVAN5-LOAD						
2	FEVAN5-BUSY-IN						
3	FEVAN5-FAIL-IN						
C1540	OUTPUT SIGNAL		-2147483648	{1}	2147483647	**FEVAN6** Signal output	See system manual (extension)
C1541	FEVAN6 CODE	141	2	{1}	2000	**FEVAN6** Target code of FEVAN6	
C1542	FEVAN6 SUBCODE	0	0	{1}	255	**FEVAN6** Target subcode FEVAN6	
C1543	FEVAN6 NUMERATOR	1.0000	0.0001	{0.0001}	100000.0000	**FEVAN6** Numerator	
C1544	FEVAN6 DENOMINATOR	0.0001	0,0001	{0.0001}	100000.0000	**FEVAN6** Denominator	
C1545	FEVAN6 OFFSET	0	0		1000000000	**FEVAN6** Offset	

Code		Possible settings		IMPORTANT	
No.	Designation	Lenze	Selection		
C1546 STOP	FEVAN6-IN	1000	FIXED0% → Selection list 1	**FEVAN6** Configuration - analog input signal	See system manual (extension)
C1547 STOP			→ selection list 2	**FEVAN6** Configuration of digital input signals	
1	FEVAN6-LOAD	1000	FIXED0		
2	FEVAN6-BUSY-IN	1000	FIXED0		
3	FEVAN6-FAIL-IN	1000	FIXED0		
C1548	FEVAN6-IN	Disp	-32768 {1} 32767	**FEVAN6** Display of analog input signal	
C1549		Disp		**FEVAN6** Configuration of digital input signals	
1	FEVAN6-LOAD				
2	FEVAN6-BUSY-IN				
3	FEVAN6-FAIL-IN				
C1550	ARITPH4 FUNCTION	1	0 OUT = IN1 1 OUT = IN1 + IN2 2 OUT = IN1 - IN2 3 OUT = IN1 × IN2 / 2^{30} 13 OUT = IN1 × IN2 14 OUT = IN1 / IN2 15 OUT = IN1 % IN2 21 OUT = IN1 + IN2 (no limit) 22 OUT = IN1 - IN2 (no limit)	**ARITPH4** Arithmetic function selection	See system manual (extension)
C1551 STOP			→ Selection list 3	**ARITPH4** Configuration of input signals	
1	ARITPH4-IN1	1000	FIXED0INC		
2	ARITPH4-IN2	1000	FIXED0INC		
C1552		Disp	-2147483647 {1} 2147483647	**ARITPH4** Display of input signals	
1	ARITPH4-IN1				
2	ARITPH4-IN2				
C1555	ARITPH5 FUNCTION	1	0 OUT = IN1 1 OUT = IN1 + IN2 2 OUT = IN1 - IN2 3 OUT = IN1 × IN2 / 2^{30} 13 OUT = IN1 × IN2 14 OUT = IN1 / IN2 15 OUT = IN1 % IN2 21 OUT = IN1 + IN2 (no limit) 22 OUT = IN1 - IN2 (no limit)	**ARITPH5** Arithmetic function selection	See system manual (extension)
C1556 STOP			→ Selection list 3	**ARITPH5** Configuration of input signals	
1	ARITPH5-IN1	1000	FIXED0INC		
2	ARITPH5-IN2	1000	FIXED0INC		
C1557		Disp	-2147483647 {1} 2147483647	**ARITPH5** Display of input signals	
1	ARITPH5-IN1				
2	ARITPH5-IN2				

Code		Possible settings				IMPORTANT	
No.	Designation	Lenze	Selection				
C1560	ARITPH6 FUNCTION	1	0 1 2 3 13 14 15 21 22	OUT = IN1 OUT = IN1 + IN2 OUT = IN1 - IN2 OUT = IN1 × IN2 / 2^{30} OUT = IN1 × IN2 OUT = IN1 / IN2 OUT = IN1 % IN2 OUT = IN1 + IN2 (no limit) OUT = IN1 - IN2 (no limit)		**ARITPH6** Arithmetic function selection	See system manual (extension)
C1561 STOP		1000			→ Selection list 3	**ARITPH6** Configuration of input signals	
1	ARITPH6-IN1	1000	FIXED0INC				
2	ARITPH6-IN2	1000	FIXED0INC				
C1562		Disp	-2147483647	{1}	2147483647	**ARITPH6** Display of input signals	
1	ARITPH6-IN1						
2	ARITPH6-IN2						
C1570 STOP					→ selection list 2	**CONVDA1** Configuration of digital input signals	See system manual (extension)
1	CONVDA1-B0	1000	FIXED0				
2	CONVDA1-B1	1000	FIXED0				
3	CONVDA1-B2	1000	FIXED0				
4	CONVDA1-B3	1000	FIXED0				
5	CONVDA1-B4	1000	FIXED0				
6	CONVDA1-B5	1000	FIXED0				
7	CONVDA1-B6	1000	FIXED0				
8	CONVDA1-B7	1000	FIXED0				
9	CONVDA1-B8	1000	FIXED0				
10	CONVDA1-B9	1000	FIXED0				
11	CONVDA1-B10	1000	FIXED0				
12	CONVDA1-B11	1000	FIXED0				
13	CONVDA1-B12	1000	FIXED0				
14	CONVDA1-B13	1000	FIXED0				
15	CONVDA1-B14	1000	FIXED0				
16	CONVDA1-SIGN	1000	FIXED0				
C1571	RESULT	Disp	0	{1 hex}	65536	**CONVDA1** Display of the result	

Code		Possible settings				IMPORTANT	
No.	Designation	Lenze	Selection				
C1573 STOP					→ selection list 2	**CONVDA2** Configuration of digital input signals	See system manual (extension)
1	CONVDA2-B0	1000	FIXED0				
2	CONVDA2-B1	1000	FIXED0				
3	CONVDA2-B2	1000	FIXED0				
4	CONVDA2-B3	1000	FIXED0				
5	CONVDA2-B4	1000	FIXED0				
6	CONVDA2-B5	1000	FIXED0				
7	CONVDA2-B6	1000	FIXED0				
8	CONVDA2-B7	1000	FIXED0				
9	CONVDA2-B8	1000	FIXED0				
10	CONVDA2-B9	1000	FIXED0				
11	CONVDA2-B10	1000	FIXED0				
12	CONVDA2-B11	1000	FIXED0				
13	CONVDA2-B12	1000	FIXED0				
14	CONVDA2-B13	1000	FIXED0				
15	CONVDA2-B14	1000	FIXED0				
16	CONVDA2-SIGN	1000	FIXED0				
C1574	RESULT	Disp	0	{1 hex}	65536	**CONVDA2** Display of the result	
C1576 STOP					→ selection list 2	**CONVDA3** Configuration of digital input signals	See system manual (extension)
1	CONVDA3-B0	1000	FIXED0				
2	CONVDA3-B1	1000	FIXED0				
3	CONVDA3-B2	1000	FIXED0				
4	CONVDA3-B3	1000	FIXED0				
5	CONVDA3-B4	1000	FIXED0				
6	CONVDA3-B5	1000	FIXED0				
7	CONVDA3-B6	1000	FIXED0				
8	CONVDA3-B7	1000	FIXED0				
9	CONVDA3-B8	1000	FIXED0				
10	CONVDA3-B9	1000	FIXED0				
11	CONVDA3-B10	1000	FIXED0				
12	CONVDA3-B11	1000	FIXED0				
13	CONVDA3-B12	1000	FIXED0				
14	CONVDA3-B13	1000	FIXED0				
15	CONVDA3-B14	1000	FIXED0				
16	CONVDA3-SIGN	1000	FIXED0				
C1577	RESULT	Disp	0	{1 hex}	65536	**CONVDA3** Display of the result	
C1580 STOP	CONVAD1-IN	1000	FIXED0%		→ Selection list 1	**CONVAD1** Configuration - analog input signal	See system manual (extension)
C1581	CONVAD1-IN	Disp	-32768	{1}	32767	**CONVAD1** Display of analog input signal	

Code		Possible settings				IMPORTANT	
No.	Designation	Lenze	Selection				
C1582 STOP	CONVAD2-IN	1000	FIXED0%		→ Selection list 1	**CONVAD2** Configuration - analog input signal	See system manual (extension)
C1583	CONVAD2-IN	Disp	-32768	{1}	32767	**CONVAD2** Display of analog input signal	
C1590	CONVAPH1 NUMERATOR	1	-32767	{1}	32767	**CONVAPH1** Numerator	See system manual (extension)
C1591	CONVAPH1 DENUMERATOR	1	1	{1}	32767	**CONVAPH1** Denominator	
C1593 STOP	CONVAPH1-IN	1000	FIXED0%		→ Selection list 1	**CONVAPH1** Configuration - analog input signal	
C1594	CONVAPH1-IN	Disp	-32768	{1}	32767	**CONVAPH1** Display of analog input signal	
C1595	CONVAPH2 NUMERATOR	1	-32767	{1}	32767	**CONVAPH2** Numerator	See system manual (extension)
C1596	CONVAPH2 DENUMERATOR	1	1	{1}	32767	**CONVAPH2** Denominator	
C1598 STOP	CONVAPH2-IN	1000	FIXED0%		→ Selection list 1	**CONVAPH2** Configuration - analog input signal	
C1599	CONVAPH2-IN	Disp	-32768	{1}	32767	**CONVAPH2** Display of analog input signal	
C1600	CONVAPH3 NUMERATOR	1	-32767	{1}	32767	**CONVAPH3** Numerator	See system manual (extension)
C1601	CONVAPH3 DENUMERATOR	1	1	{1}	32767	**CONVAPH3** Denominator	
C1603 STOP	CONVAPH3-IN	1000	FIXED0%		→ Selection list 1	**CONVAPH3** Configuration - analog input signal	
C1604	CONVAPH3-IN	Disp	-32768	{1}	32767	**CONVAPH3** Display of analog input signal	
C1610		1	0	{1}	31	**CONVPHA2** Division factor	See system manual (extension)
C1611 STOP	CONVPHA2-IN	1000	FIXED0INC		→ Selection list 3	**CONVPHA2** Configuration of input signal	
C1612	CONVPHA2-IN	Disp				**CONVPHA2** Display of input signal	
C1615		1	0	{1}	31	**CONVPHA3** Division factor	See system manual (extension)
C1616 STOP	CONVPHA3-IN	1000	FIXED0INC		→ Selection list 3	**CONVPHA3** Configuration of input signal	
C1617	CONVPHA3-IN	Disp				**CONVPHA3** Display of input signal	

Code		Possible settings		IMPORTANT	
No.	Designation	Lenze	Selection		
C1640 STOP	SP1-RESET	1000	FIXED0 → selection list 2	**SP1** Configuraton of digital input signal	See system manual (extension)
C1641			0 Real zero 1 VTPOS-No 001 ... 104 VTPOS-No 104	**SP1**	
1	SP1-VALUE 1-1	1		Switching point output SP1-STAT1	
2	SP1-VALUE 1-2	1			
3	SP1-VALUE 2-1	1		Switching point output SP1-STAT2	
4	SP1-VALUE 2-2	1			
5	SP1-VALUE 3-1	1		Switching point output SP1-STAT3	
6	SP1-VALUE 3-2	1			
7	SP1-VALUE 4-1	1		Switching point output SP1-STAT4	
8	SP1-VALUE 4-2	1			
9	SP1-VALUE 5-1	1		Switching point output SP1-STAT5	
10	SP1-VALUE 5-2	1			
11	SP1-VALUE 6-1	1		Switching point output SP1-STAT6	
12	SP1-VALUE 6-2	1			
13	SP1-VALUE 7-1	1		Switching point output SP1-STAT8	
14	SP1-VALUE 7-2	1			
15	SP1-VALUE 8-1	1		Switching point output SP1-STAT8	
16	SP1-VALUE 8-2	1			
C1642 STOP	SP1-L-IN	1000	FIXED0INC → Selection list 3	**SP1** Configuration of input signal	
C1643	SP1-RESET	Disp	0 1	**SP1** Display of digital input signal	
C1644	SP1-L-IN	Disp	-1073741824 {1 inc} 1073741823	**SP1** Display of input signal	
C1645	SP1-MODE	0	0 Starting point and final point 1 Centre with switch range	**SP1** Setting of the switching points	

Code		Possible settings		IMPORTANT
No.	Designation	Lenze	Selection	
C1650 STOP	SP2-RESET	1000	FIXED0 → selection list 2	**SP2** Configuraton of digital input signal
C1651			0 Real zero 1 VTPOS-No 001 ... ... 104 VTPOS-No 104	**SP2**
1	SP2-VALUE 1-1	1		Switching point output SP2-STAT1
2	SP2-VALUE 1-2	1		
3	SP2-VALUE 2-1	1		Switching point output SP2-STAT2
4	SP2-VALUE 2-2	1		
5	SP2-VALUE 3-1	1		Switching point output SP2-STAT3
6	SP2-VALUE 3-2	1		
7	SP2-VALUE 4-1	1		Switching point output SP2-STAT4
8	SP2-VALUE 4-2	1		
9	SP2-VALUE 5-1	1		Switching point output SP2-STAT5
10	SP2-VALUE 5-2	1		
11	SP2-VALUE 6-1	1		Switching point output SP2-STAT6
12	SP2-VALUE 6-2	1		
13	SP2-VALUE 7-1	1		Switching point output SP2-STAT8
14	SP2-VALUE 7-2	1		
15	SP2-VALUE 8-1	1		Switching point output SP2-STAT8
16	SP2-VALUE 8-2	1		
C1652 STOP	SP2-L-IN	1000	FIXED0INC → Selection list 3	**SP2** Configuration of input signal
C1653	SP2-RESET	Disp	0 1	**SP2** Display of digital input signal
C1654	SP2-L-IN	Disp	-1073741824 {1 inc} 1073741823	**SP2** Display of input signal
C1655	SP2-MODE	0	0 Starting point and final point 1 Centre with switch range	**SP2** Setting of the switching points
C1657			-30000 {1 ms} 30000	**SP2** Dead time
1	DEAD TIME	0		
...	...	0		
4	DEAD TIME	0		
C1658	HYSTERESIS	0	-32767 {1 inc} 32767	**SP2** Hysteresis
C1659	FILTER	1	0 Filter off 1 Filter 1 ms 2 Filter 2 ms 4 Filter 4 ms 8 Filter 8 ms 16 Filter 16 ms	**SP2** Filters

Code		Possible settings				IMPORTANT	
No.	Designation	Lenze	Selection				
C1660	ACT. SELECTION	Disp	0	{1}	8	**SELPH1** Shows which input is currently switched to SELPH1-OUT	
C1661 STOP	SELPH1-SELECT	1000	FIXED0%		→ Selection list 1	**SELPH1** Configuration - analog input signal	
C1662 STOP					→ Selection list 3	**SELPH1** Configuration of input signals	
1	SELPH1-IN1	1000	FIXED0INC				
...	...	1000	FIXED0INC				
8	SELPH1-IN8	1000	FIXED0INC				
C1663	SELPH1-SELECT	Disp	-32768	{1}	32767	**SELPH1** Display of analog input signal	
C1664		Disp	-2147483648	{1 inc}	147483647	**SELPH1** Display of input signals	
1	SELPH1-IN1						
...	...						
8	SELPH1-IN8						
C1665	ACT. SELECTION	Disp	0	{1}	8	**SELPH2** Shows which input is currently switched to SELPH2-OUT	See system manual (extension)
C1666 STOP	SELPH2-SELECT	1000	FIXED0%		→ Selection list 1	**SELPH2** Configuration - analog input signal	
C1667 STOP					→ Selection list 3	**SELPH2** Configuration of input signals	
1	SELPH2-IN1	1000	FIXED0INC				
...	...	1000	FIXED0INC				
8	SELPH2-IN8	1000	FIXED0INC				
C1668	SELPH2-SELECT	Disp	-32768	{1}	32767	**SELPH2** Display of analog input signal	
C1669		Disp	-2147483648	{1 inc}	147483647	**SELPH2** Display of input signals	
1	SELPH2-IN1						
...	...						
8	SELPH2-IN8						

Code		Possible settings				IMPORTANT	
No.	Designation	Lenze	Selection				
C1670	CMPPH1-FUNCTION	1	1	IN1 = IN2		**CMPPH1** Selection of the function for comparing two phase signals	See system manual (extension)
			2	IN1 > IN2			
			3	IN1 < IN2			
			4	|IN1| = |IN2|			
			5	|IN1| > |IN2|			
			6	|IN1| < |IN2|			
C1671	CMPPH1-HYSTERESIS	50	0	{1 inc}	1073741824	**CMPPH1** Hysteresis to compensate an oscillating output signal due to unstable input signals	
C1672	CMPPH1-WINDOW	0	0	{1 inc}	1073741824	**CMPPH1** Window within which the phase signals comply with each other	
C1673 STOP			→ Selection list 3			**CMPPH1** Configuration of input signals	
1	CMPPH1-IN1	1000	FIXED0INC				
2	CMPPH1-IN2	1000	FIXED0INC				
C1674		Disp	-2147483647	{1 inc}	2147483647	**CMPPH1** Display of input signals	
1	CMPPH1-IN1						
2	CMPPH1-IN2						
C1675	CMPPH2-FUNCTION	1	1	IN1 = IN2		**CMPPH2** Selection of the function for comparing two phase signals	See system manual (extension)
			2	IN1 > IN2			
			3	IN1 < IN2			
			4	|IN1| = |IN2|			
			5	|IN1| > |IN2|			
			6	|IN1| < |IN2|			
C1676	CMPPH2-HYSTERESIS	50	0	{1 inc}	1073741824	**CMPPH2** Hysteresis to compensate an oscillating output signal due to unstable input signals	
C1677	CMPPH2-WINDOW	0	0	{1 inc}	1073741824	**CMPPH2** Window within which the phase signals comply with each other	
C1678 STOP			→ Selection list 3			**CMPPH2** Configuration of input signals	
1	CMPPH2-IN1	1000	FIXED0INC				
2	CMPPH2-IN2	1000	FIXED0INC				
C1679		Disp	-2147483647	{1 inc}	2147483647	**CMPPH2** Display of input signals	
1	CMPPH2-IN1						
2	CMPPH2-IN2						
C1680	CMPPH3-FUNCTION	1	1	IN1 = IN2		**CMPPH3** Selection of the function for comparing two phase signals	
			2	IN1 > IN2			
			3	IN1 < IN2			
			4	|IN1| = |IN2|			
			5	|IN1| > |IN2|			
			6	|IN1| < |IN2|			

Code		Possible settings				IMPORTANT	
No.	Designation	Lenze	Selection				
C1681	CMPPH3-HYSTERESIS	50	0	{1 inc}	1073741824	**CMPPH3** Hysteresis to compensate an oscillating output signal due to unstable input signals	See system manual (extension)
C1682	CMPPH3-WINDOW	0	0	{1 inc}	1073741824	**CMPPH3** Window within which the phase signals comply with each other	
C1683 STOP					→ Selection list 3	**CMPPH3** Configuration of input signals	
1	CMPPH3-IN1	1000	FIXED0INC				
2	CMPPH3-IN2	1000	FIXED0INC				
C1684		Disp	-2147483647	{1 inc}	2147483647	**CMPPH3** Display of input signals	
1	CMPPH3-IN1						
2	CMPPH3-IN2						
C1690 STOP					→ Selection list 1	**DISA** Configuration of analog input signals	See system manual (extension)
1	DISA-IN1	1000	FIXED0%				
...	...	...	...				
10	DISA-IN10	1000	FIXED0%				
C1691		Disp	-199.99	{0.01 %}	199.99	**DISA** Display of the input signals in the analog format	
1	DISA-IN (%)1						
...	...						
10	DISA-IN (%)10						
C1692		Disp	-32768	{1}	32768	**DISA** Display of the input signals in the decimal format	
1	DISA-IN (VALUE)1						
...	...						
10	DISA-IN (VALUE)10						
C1693		Disp	0	{1 hex}	65536	**DISA** Display of the input signals in the hexadecimal format	
1	DISA-IN (HEX)1						
...	...						
10	DISA-IN (HEX)10						
C1695 STOP					→ Selection list 3	**DISPH** Configuration of input signals	See system manual (extension)
1	DISPH-IN1	1000	FIXED0INC				
...	...	...	FIXED0INC				
10	DISPH-IN10	1000	FIXED0INC				
C1696		Disp	-2147483647	{1 inc}	2147483647	**DISPH** Display of input signals	
1	DISPH-IN1						
...	...						
10	DISPH-IN10						

Code		Possible settings				IMPORTANT	
No.	Designation	Lenze	Selection				
C1700		Disp	-2147483647	{1}	2147483647	**BCD1**	See system manual (extension)
1	OUTPUT SIGNAL					Display of output signal	
2	BCD RESULT					Display of the output signal after the evaluation with C1703/C1704 and C1705	
C1701	BCD1 CODE	141	11	{1}	2000	**BCD1** Code	
C1702	BCD1 SUBCODE	0	0	{1}	255	**BCD1** Subcode	
C1703	BCD1 NUMERATOR	1	0	{1}	100000	**BCD1** Numerator	
C1704	BCD1 DENOMINATOR	0.0001	0.0001	{0.0001}	100000.0000	**BCD1** Denominator	
C1705	BCD1 OFFSET	0	0	{1}	1000000000	**BCD1** Offset	
C1706	BCD MODE	0	0 1	Without acceptance signal With acceptance signal		**BCD1** Mode	
C1707	BCD DELAY	10	0	{1 ms}	255	**BCD1** Deceleration	
C1708 STOP					→ selection list 2	**BCD1** Configuration of digital input signals	See system manual (extension)
1	BCD1-READ	1000	FIXED0				
2	BCD1-DATA1	1000	FIXED0				
3	BCD1-DATA2	1000	FIXED0				
4	BCD1-DATA3	1000	FIXED0				
5	BCD1-DATA4	1000	FIXED0				
6	BCD1-LOAD	1000	FIXED0				
7	BCD1-BUSY-IN	1000	FIXED0				
8	BCD1-FAIL-IN	1000	FIXED0				
C1709		Disp	0		1	**BCD1** Display of digital input signals	
1	BCD1-READ						
2	BCD1-DATA1						
3	BCD1-DATA2						
4	BCD1-DATA3						
5	BCD1-DATA4						
6	BCD1-LOAD						
7	BCD1-BUSY-IN						
8	BCD1-FAIL-IN						

Code		Possible settings				IMPORTANT	
No.	Designation	Lenze	Selection				
C1710		Disp	-2147483647	{1}	2147483647	**BCD2**	See system manual (extension)
1	OUTPUT SIGNAL					Display of output signal	
2	BCD RESULT					Display of the output signal after the evaluation with C1703/C1704 and C1705	
C1711	BCD2 CODE	141	11	{1}	2000	**BCD2** Code	
C1712	BCD2 SUBCODE	0	0	{1}	255	**BCD2** Subcode	
C1713	BCD2 NUMERATOR	1	0	{1}	100000	**BCD2** Numerator	
C1714	BCD2 DENOMINATOR	0.0001	0.0001	{0.0001}	100000.0000	**BCD2** Denominator	
C1715	BCD2 OFFSET	0	0	{1}	1000000000	**BCD2** Offset	
C1716	BCD MODE	0	0 1	Without acceptance signal With acceptance signal		**BCD2** Mode	
C1717	BCD DELAY	10	0	{1 ms}	255	**BCD2** Deceleration	
C1718 STOP					→ selection list 2	**BCD2** Configuration of digital input signals	See system manual (extension)
1	BCD2-READ	1000	FIXED0				
2	BCD2-DATA1	1000	FIXED0				
3	BCD2-DATA2	1000	FIXED0				
4	BCD2-DATA3	1000	FIXED0				
5	BCD2-DATA4	1000	FIXED0				
6	BCD2-LOAD	1000	FIXED0				
7	BCD2-BUSY-IN	1000	FIXED0				
8	BCD2-FAIL-IN	1000	FIXED0				
C1719		Disp	0		1	**BCD2** Display of digital input signals	
1	BCD2-READ						
2	BCD2-DATA1						
3	BCD2-DATA2						
4	BCD2-DATA3						
5	BCD2-DATA4						
6	BCD2-LOAD						
7	BCD2-BUSY-IN						
8	BCD2-FAIL-IN						

Code		Possible settings				IMPORTANT	
No.	Designation	Lenze	Selection				
C1720		Disp	-2147483647	{1}	2147483647	**BCD3**	See system manual (extension)
1	OUTPUT SIGNAL					Display of output signal	
2	BCD RESULT					Display of the output signal after the evaluation with C1703/C1704 and C1705	
C1721	BCD3 CODE	141	11	{1}	2000	**BCD3** Code	
C1722	BCD3 SUBCODE	0	0	{1}	255	**BCD3** Subcode	
C1723	BCD3 NUMERATOR	1	0	{1}	100000	**BCD3** Numerator	
C1724	BCD3 DENOMINATOR	0.0001	0.0001	{0.0001}	100000.0000	**BCD3** Denominator	
C1725	BCD3 OFFSET	0	0	{1}	1000000000	**BCD3** Offset	
C1726	BCD MODE	0	0 Without acceptance signal 1 With acceptance signal			**BCD3** Mode	
C1727	BCD DELAY	10	0	{1 ms}	255	**BCD3** Deceleration	
C1728 STOP					→ selection list 2	**BCD3** Configuration of digital input signals	See system manual (extension)
1	BCD3-READ	1000	FIXED0				
2	BCD3-DATA1	1000	FIXED0				
3	BCD3-DATA2	1000	FIXED0				
4	BCD3-DATA3	1000	FIXED0				
5	BCD3-DATA4	1000	FIXED0				
6	BCD3-LOAD	1000	FIXED0				
7	BCD3-BUSY-IN	1000	FIXED0				
8	BCD3-FAIL-IN	1000	FIXED0				
C1729		Disp	0		1	**BCD3** Display of digital input signals	
1	BCD3-READ						
2	BCD3-DATA1						
3	BCD3-DATA2						
4	BCD3-DATA3						
5	BCD3-DATA4						
6	BCD3-LOAD						
7	BCD3-BUSY-IN						
8	BCD3-FAIL-IN						
C1799	DFOUT F_{MAX} [KHZ]	1250	20	{1}	1250	**DFOUT f_{max} (kHz)** 1250 corresponds to 500 kHz	

8.6 Selection lists

8.6.1 Selection list 1: Analog output signals

Parameter	Analog output signal (O)
000050	AIN1-OUT
000055	AIN2-OUT
000100	DFSET-NOUT
001000	FIXED0%
001006	FIXED100%
001007	FIXED-100%
005000	MCTRL-NSET2
005001	MCTRL-NACT
005002	MCTRL-MSET2
005003	MCTRL-MACT
005004	MCTRL-IACT
005005	MCTRL-DCVOLT
005009	MCTRL-PHI-ANA
005050	NSET-NOUT
005051	NSET-RFG-I
005100	MPOT1-OUT
005550	ADD1-OUT
005600	RFG1-OUT
005650	ASW1-OUT
005655	ASW2-OUT
005700	ANEG1-OUT
005705	ANEG2-OUT
006200	CONV1-OUT
006205	CONV2-OUT
006210	CONV3-OUT
006215	CONV4-OUT
006230	CONVPHA1-OUT
006232	CONVPHA2-OUT
006234	CONVPHA3-OUT
006300	S&H1-OUT
006350	CURVE1-OUT
006400	FCNT1-OUT
006405	FCNT2-OUT
006410	FCNT3-OUT
006550	TEACH1-CNT
006600	SYNC1-OUT3
007200	CONVDA1-OUT
007205	CONVDA2-OUT
007210	CONVDA3-OUT
010000	BRK1-M-SET
015028	MCTRL-Utilization
015030	MCTRL-LOAD-I2Xt

Parameter	Analog output signal (O)
019500	FCODE-17
019502	FCODE-26/1
019503	FCODE-26/2
019504	FCODE-27/1
019505	FCODE-27/2
019506	FCODE-32
019507	FCODE-37
019510	FCODE-108/1
019511	FCODE-108/2
019512	FCODE-109/1
019513	FCODE-109/2
019515	FCODE-141
019517	FCODE-1211
019521	FCODE-472/1
019522	FCODE-472/2
019523	FCODE-472/3
019524	FCODE-472/4
019525	FCODE-472/5
019526	FCODE-472/6
019527	FCODE-472/7
019528	FCODE-472/8
019529	FCODE-472/9
019530	FCODE-472/10
019531	FCODE-472/11
019532	FCODE-472/12
019533	FCODE-472/13
019534	FCODE-472/14
019535	FCODE-472/15
019536	FCODE-472/16
019537	FCODE-472/17
019538	FCODE-472/18
019539	FCODE-472/19
019540	FCODE-472/20
019551	FCODE-473/1
019552	FCODE-473/2
019553	FCODE-473/3
019554	FCODE-473/4
019555	FCODE-473/5
019556	FCODE-473/6
019557	FCODE-473/7
019558	FCODE-473/8
019559	FCODE-473/9

Parameter	Analog output signal (O)
019560	FCODE-473/10
020101	CAN-IN1.W1
020102	CAN-IN1.W2
020103	CAN-IN1.W3
020201	CAN-IN2.W1
020202	CAN-IN2.W2
020203	CAN-IN2.W3
020204	CAN-IN2.W4
020301	CAN-IN3.W1
020302	CAN-IN3.W2
020303	CAN-IN3.W3
020304	CAN-IN3.W4
025101	AIF-IN.W1
025102	AIF-IN.W2
025103	AIF-IN.W3
030000	POS-ACT-PS-NO
030010	POS-NSET
030020	pos-nout
030021	pos-Mout
030030	POS-POUT-NORM
031301	VTTIME-OUT1
031302	VTTIME-OUT2
031303	VTTIME-OUT3
031304	VTTIME-OUT4
031351	VTPCS-OUT1
031352	VTPCS-OUT2
031353	VTPCS-OUT3
031354	VTPCS-OUT4

8.6.2 Selection list 2: Digital output signals

Parameter	Digital output signal (☐)
000051	DIGIN1
000052	DIGIN2
000053	DIGIN3
000054	DIGIN4
000055	DIGIN5
000060	STATE-BUS-O
000065	DIGIN-CINH
000100	DFSET-ACK
000500	DCTRL-RDY
000501	DCTRL-CINH
000502	DCTRL-INIT
000503	DCTRL-IMP
000504	DCTRL-NACT=0
000505	DCTRL-CW/CCW
001000	FIXED0
001001	FIXED1
005001	MCTRL-QSP-OUT
005002	MCTRL-IMAX
005003	MCTRL-MMAX
005050	NSET-RFG-I=0
006000	DFRFG1-FAIL
006001	DFRFG1-SYNC
006400	FCNT1-EQUAL
006405	FCNT2-EQUAL
006410	FCNT3-EQUAL
006450	SP1-STATUS-01
006451	SP1-STATUS-02
006452	SP1-STATUS-03
006453	SP1-STATUS-04
006454	SP1-STATUS-05
006455	SP1-STATUS-06
006456	SP1-STATUS-07
006457	SP1-STATUS-08
006460	SP2-STATUS-01
006461	SP2-STATUS-02
006462	SP2-STATUS-03
006463	SP2-STATUS-04
006464	SP2-STATUS-05
006465	SP2-STATUS-06
006466	SP2-STATUS-07
006467	SP2-STATUS-08
006600	SYNC1-STAT
007150	CONVAD1-0
007151	CONVAD1-1
007152	CONVAD1-2

Parameter	Digital output signal (☐)
007153	CONVAD1-3
007154	CONVAD1-4
007155	CONVAD1-5
007156	CONVAD1-6
007157	CONVAD1-7
007158	CONVAD1-8
007159	CONVAD1-9
007160	CONVAD1-10
007161	CONVAD1-11
007162	CONVAD1-12
007163	CONVAD1-13
007164	CONVAD1-14
007165	CONVAD1-SIGN
007170	CONVAD2-0
007171	CONVAD2-1
007172	CONVAD2-2
007173	CONVAD2-3
007174	CONVAD2-4
007175	CONVAD2-5
007176	CONVAD2-6
007177	CONVAD2-7
007178	CONVAD2-8
007179	CONVAD2-9
007180	CONVAD2-10
007181	CONVAD2-11
007182	CONVAD2-12
007183	CONVAD2-13
007184	CONVAD2-14
007185	CONVAD2-SIGN
010000	BRK1-OUT
010001	BRK1-CINH
010002	BRK1-QSP
010003	BRK1-M-STORE
010250	R/L/Q-QSP
010251	R/L/Q-R/L
010500	AND1-OUT
010505	AND2-OUT
010510	AND3-OUT
010515	AND4-OUT
010520	AND5-OUT
010550	OR1-OUT
010555	OR2-OUT
010560	OR3-OUT
010565	OR4-OUT
010570	OR5-OUT

Parameter	Digital output signal (☐)
010600	NOT1-OUT
010605	NOT2-OUT
010610	NOT3-OUT
010615	NOT4-OUT
010620	NOT5-OUT
010650	CMP1-OUT
010655	CMP2-OUT
010700	DIGDEL1-OUT
010705	DIGDEL2-OUT
010750	TRANS1-OUT
010755	TRANS2-OUT
010900	FLIP1-OUT
010905	FLIP2-OUT
011000	CMPPH1-OUT
011005	CMPPH2-OUT
011010	CMPPH3-OUT
012000	PHINT1-FAIL
013000	FEVAN1-BUSY
013001	FEVAN1-FAIL
013005	FEVAN2-BUSY
013006	FEVAN2-FAIL
013010	FEVAN3-BUSY
013011	FEVAN3-FAIL
013015	FEVAN4-BUSY
013016	FEVAN4-FAIL
013020	FEVAN5-BUSY
013021	FEVAN5-FAIL
013025	FEVAN6-BUSY
013026	FEVAN6-FAIL
013050	BCD1-SEL1
013051	BCD1-SEL2
013052	BCD1-SEL3
013053	BCD1-SEL4
013054	BCD1-SEL5
013055	BCD1-SEL6
013056	BCD1-SEL7
013057	BCD1-SEL8
013058	BCD1-SIGN
013059	BCD1-NEW-DATA
013060	BCD1-EOT
013061	BCD1-DATA-FLT
013062	BCD1-BUSY
013063	BCD1-FAIL
013065	BCD2-SEL1
013066	BCD2-SEL2
013067	BCD2-SEL3

Parameter	Digital output signal (☐)
013068	BCD2-SEL4
013069	BCD2-SEL5
013070	BCD2-SEL6
013071	BCD2-SEL7
013072	BCD2-SEL8
013073	BCD2-SIGN
013074	BCD2-NEW-DATA
013075	BCD2-EOT
013076	BCD2-DATA-FLT
013077	BCD2-BUSY
013078	BCD2-FAIL
013080	BCD3-SEL1
013081	BCD3-SEL2
013082	BCD3-SEL3
013083	BCD3-SEL4
013084	BCD3-SEL5
013085	BCD3-SEL6
013086	BCD3-SEL7
013087	BCD3-SEL8
013088	BCD3-SIGN
013089	BCD3-NEW-DATA
013090	BCD3-EOT
013091	BCD3-DATA-FLT
013092	BCD3-BUSY
013093	BCD3-FAIL
015000	DCTRL-TRIP
015001	DCTRL-MESS
015002	DCTRL-WARN
015003	DCTRL-FAIL
015004	DCTRL-FAILQSP
015010	MONIT-LU
015011	MONIT-OU
015012	MONIT-EEr
015013	MONIT-OC1
015014	MONIT-OC2
015015	MONIT-LP1
015016	MONIT-OH
015017	MONIT-OH3
015018	MONIT-OH4
015019	MONIT-OH7
015020	MONIT-OH8
015021	MONIT-Sd2
015022	MONIT-Sd3
015023	MONIT-P03
015024	MONIT-P13
015026	MONIT-CE0

Parameter	Digital output signal (☐)
015027	MONIT-NMAX
015028	MONIT-OC5
015029	MONIT-SD5
015030	MONIT-SD6
015031	MONIT-SD7
015032	MONIT-H07
015033	MONIT-H10
015034	MONIT-H11
015040	MONIT-CE1
015041	MONIT-CE2
015042	MONIT-CE3
015043	MONIT-CE4
015044	MONIT-PL
015047	MONIT-OC6
015301	MONIT-P01
015302	MONIT-P02
015304	MONIT-P04
015305	MONIT-P05
015306	MONIT-P06
015307	MONIT-P07
015308	MONIT-P08
015309	MONIT-P09
015312	MONIT-P12
015314	MONIT-P14
015315	MONIT-P15
015316	MONIT-P16
015317	MONIT-P17
015318	MONIT-P18
019500	FCODE-250
019521	FCODE-471.B0
019522	FCODE-471.B1
019523	FCODE-471.B2
019524	FCODE-471.B3
019525	FCODE-471.B4
019526	FCODE-471.B5
019527	FCODE-471.B6
019528	FCODE-471.B7
019529	FCODE-471.B8
019530	FCODE-471.B9
019531	FCODE-471.B10
019532	FCODE-471.B11
019533	FCODE-471.B12
019534	FCODE-471.B13
019535	FCODE-471.B14
019536	FCODE-471.B15
019537	FCODE-471.B16

Parameter	Digital output signal (☐)
019538	FCODE-471.B17
019539	FCODE-471.B18
019540	FCODE-471.B19
019541	FCODE-471.B20
019542	FCODE-471.B21
019543	FCODE-471.B22
019544	FCODE-471.B23
019545	FCODE-471.B24
019546	FCODE-471.B25
019547	FCODE-471.B26
019548	FCODE-471.B27
019549	FCODE-471.B28
019550	FCODE-471.B29
019551	FCODE-471.B30
019552	FCODE-471.B31
019751	FCODE-135.B0
019752	FCODE-135.B1
019753	FCODE-135.B2
019755	FCODE-135.B4
019756	FCODE-135.B5
019757	FCODE-135.B6
019758	FCODE-135.B7
019763	FCODE-135.B12
019764	FCODE-135.B13
019765	FCODE-135.B14
019766	FCODE-135.B15
020001	CAN-CTRL.B0
020002	CAN-CTRL.B1
020003	CAN-CTRL.B2
020005	CAN-CTRL.B4
020006	CAN-CTRL.B5
020007	CAN-CTRL.B6
020008	CAN-CTRL.B7
020013	CAN-CTRL.B12
020014	CAN-CTRL.B13
020015	CAN-CTRL.B14
020016	CAN-CTRL.B15
020101	CAN-IN1.B0
020102	CAN-IN1.B1
020103	CAN-IN1.B2
020104	CAN-IN1.B3
020105	CAN-IN1.B4
020106	CAN-IN1.B5

Parameter	Digital output signal (☐)
020107	CAN-IN1.B6
020108	CAN-IN1.B7
020109	CAN-IN1.B8
020110	CAN-IN1.B9
020111	CAN-IN1.B10
020112	CAN-IN1.B11
020113	CAN-IN1.B12
020114	CAN-IN1.B13
020115	CAN-IN1.B14
020116	CAN-IN1.B15
020117	CAN-IN1.B16
020118	CAN-IN1.B17
020119	CAN-IN1.B18
020120	CAN-IN1.B19
020121	CAN-IN1.B20
020122	CAN-IN1.B21
020123	CAN-IN1.B22
020124	CAN-IN1.B23
020125	CAN-IN1.B24
020126	CAN-IN1.B25
020127	CAN-IN1.B26
020128	CAN-IN1.B27
020129	CAN-IN1.B28
020130	CAN-IN1.B29
020131	CAN-IN1.B30
020132	CAN-IN1.B31
020201	CAN-IN2.B0
020202	CAN-IN2.B1
020203	CAN-IN2.B2
020204	CAN-IN2.B3
020205	CAN-IN2.B4
020206	CAN-IN2.B5
020207	CAN-IN2.B6
020208	CAN-IN2.B7
020209	CAN-IN2.B8
020210	CAN-IN2.B9
020211	CAN-IN2.B10
020212	CAN-IN2.B11
020213	CAN-IN2.B12
020214	CAN-IN2.B13
020215	CAN-IN2.B14
020216	CAN-IN2.B15
020217	CAN-IN2.B16
020218	CAN-IN2.B17
020219	CAN-IN2.B18
020220	CAN-IN2.B19

Parameter	Digital output signal (☐)
020221	CAN-IN2.B20
020222	CAN-IN2.B21
020223	CAN-IN2.B22
020224	CAN-IN2.B23
020225	CAN-IN2.B24
020226	CAN-IN2.B25
020227	CAN-IN2.B26
020228	CAN-IN2.B27
020229	CAN-IN2.B28
020230	CAN-IN2.B29
020231	CAN-IN2.B30
020232	CAN-IN2.B31
020301	CAN-IN3.B0
020302	CAN-IN3.B1
020303	CAN-IN3.B2
020304	CAN-IN3.B3
020305	CAN-IN3.B4
020306	CAN-IN3.B5
020307	CAN-IN3.B6
020308	CAN-IN3.B7
020309	CAN-IN3.B8
020310	CAN-IN3.B9
020311	CAN-IN3.B10
020312	CAN-IN3.B11
020313	CAN-IN3.B12
020314	CAN-IN3.B13
020315	CAN-IN3.B14
020316	CAN-IN3.B15
020317	CAN-IN3.B16
020318	CAN-IN3.B17
020319	CAN-IN3.B18
020320	CAN-IN3.B19
020321	CAN-IN3.B20
020322	CAN-IN3.B21
020323	CAN-IN3.B22
020324	CAN-IN3.B23
020325	CAN-IN3.B24
020326	CAN-IN3.B25
020327	CAN-IN3.B26
020328	CAN-IN3.B27
020329	CAN-IN3.B28
020330	CAN-IN3.B29
020331	CAN-IN3.B30
020332	CAN-IN3.B31
025001	AIF-CTRL.B0
025002	AIF-CTRL.B1

Parameter	Digital output signal (☐)
025003	AIF-CTRL.B2
025005	AIF-CTRL.B4
025006	AIF-CTRL.B5
025007	AIF-CTRL.B6
025008	AIF-CTRL.B7
025013	AIF-CTRL.B12
025014	AIF-CTRL.B13
025015	AIF-CTRL.B14
025016	AIF-CTRL.B15
025101	AIF-IN.B0
025102	AIF-IN.B1
025103	AIF-IN.B2
025104	AIF-IN.B3
025105	AIF-IN.B4
025106	AIF-IN.B5
025107	AIF-IN.B6
025108	AIF-IN.B7
025109	AIF-IN.B8
025110	AIF-IN.B9
025111	AIF-IN.B10
025112	AIF-IN.B11
025113	AIF-IN.B12
025114	AIF-IN.B13
025115	AIF-IN.B14
025116	AIF-IN.B15
025117	AIF-IN.B16
025118	AIF-IN.B17
025119	AIF-IN.B18
025120	AIF-IN.B19
025121	AIF-IN.B20
025122	AIF-IN.B21
025123	AIF-IN.B22
025124	AIF-IN.B23
025125	AIF-IN.B24
025126	AIF-IN.B25
025127	AIF-IN.B26
025128	AIF-IN.B27
025129	AIF-IN.B28
025130	AIF-IN.B29
025131	AIF-IN.B30
025132	AIF-IN.B31
030000	POS-STARTED
030001	POS-STOPED
030002	POS-ENDED
030003	POS-RESETED
030010	POS-STDBY-ACT
030011	POS-MANU-ACT

Parameter	Digital output signal (☐)
030012	pos-ref-ok
030013	POS-IN-TARGET
030014	POS-VTRAV-REA
030015	POS-VFIN-REAC
030016	POS-ACC-RAMP
030017	POS-DCC-RAMP
030101	pos-pfo1
030102	POS-PFO2
030103	POS-PFO3
030104	POS-PFO4
030105	POS-PFO5
030106	POS-PFO6
030107	POS-PFO7
030108	POS-PFO8
030109	POS-PFO9
030110	POS-PFO10
030111	POS-PFO11
030112	POS-PFO12
030113	POS-PFO13
030114	POS-PFO14
030115	POS-PFO15
030116	POS-PFO16
030117	POS-PFO17
030118	POS-PFO18
030119	POS-PFO19
030120	POS-PFO20
030121	POS-PFO21
030122	POS-PFO22
030123	POS-PFO23
030124	POS-PFO24
030125	POS-PFO25
030126	POS-PFO26
030127	POS-PFO27
030128	POS-PFO28
030129	POS-PFO29
030130	POS-PFO30
030131	POS-PFO31
030132	POS-PFO32
030200	POS-TP1-EN
030201	POS-TP1-RECOG
030202	POS-TP2-EN
030203	POS-TP2-RECOG
030204	POS-TP3-EN
030205	POS-TP3-RECOG
030206	POS-TP4-EN
030207	POS-TP4-RECOG

8.6.3 Selection list 3: Angle signals

Parameter	Angle signal (▲)
000100	DFSET-PSET
000101	DFSET-PSET2
001000	FIXED0INC
005000	MCTRL-PHI-ANG
005520	ARITPH1-OUT
005525	ARITPH2-OUT
005530	ARITPH3-OUT
005535	ARITPH4-OUT
005540	ARITPH5-OUT
005545	ARITPH6-OUT
005775	SELPH1-OUT
005780	SELPH2-OUT
006237	CONVPHPH2-OUT
006600	SYNC1-OUT2
007050	CONVAPH1-OUT
007055	CONVAPH2-OUT
007060	CONVAPH3-OUT
012000	PHINT1-OUT
012050	PHDIV1-OUT
019521	FCODE-474/1
019522	FCODE-474/2
019523	FCODE-474/3
019524	FCODE-474/4
019525	FCODE-474/5
019526	FCODE-474/6
019527	FCODE-474/7
019528	FCODE-474/8
019529	FCODE-474/9
019530	FCODE-474/10
020103	CAN-IN1.D1
020201	CAN-IN2.D1
020301	CAN-IN3.D1
025103	AIF-IN.D1
025104	AIF-IN.D2
030010	POS-TARGET
030011	POS-VTRAV
030012	POS-VFINAL
030013	POS-ACC
030014	POS-DCC
030015	POS-ASET
030016	POS-VSET
030017	POS-SETPOS
030020	POS-POUT
030021	POS-ACTPOS
030022	POS-ABS-VAL
031001	VTPOS-OUT1

Parameter	Angle signal (▲)
031002	VTPOS-OUT2
031003	VTPOS-OUT3
031004	VTPOS-OUT4
031005	VTPOS-OUT5
031006	VTPOS-OUT6
031007	VTPOS-OUT7
031008	VTPOS-OUT8
031009	VTPOS-OUT9
031010	VTPOS-OUT10
031011	VTPOS-OUT11
031012	VTPOS-OUT12
031013	VTPOS-OUT13
031014	VTPOS-OUT14
031015	VTPOS-OUT15
031016	VTPOS-OUT16
031017	VTPOS-OUT17
031018	VTPOS-OUT18
031019	VTPOS-OUT19
031020	VTPOS-OUT20
031021	VTPOS-OUT21
031022	VTPOS-OUT22
031023	VTPOS-OUT23
031024	VTPOS-OUT24
031025	VTPOS-OUT25
031026	VTPOS-OUT26
031027	VTPOS-OUT27
031028	VTPOS-OUT28
031029	VTPOS-OUT29
031030	VTPOS-OUT30
031031	VTPOS-OUT31
031032	VTPOS-OUT32
031033	VTPOS-OUT33
031034	VTPOS-OUT34
031035	VTPOS-OUT35
031036	VTPOS-OUT36
031037	VTPOS-OUT37
031038	VTPOS-OUT38
031039	VTPOS-OUT39
031040	VTPOS-OUT40
031041	VTPOS-OUT41
031042	VTPOS-OUT42
031043	VTPOS-OUT43
031044	VTPOS-OUT44
031045	VTPOS-OUT45
031046	VTPOS-OUT46
031047	VTPOS-OUT47

Parameter	Angle signal (▲)
031048	VTPOS-OUT48
031049	VTPOS-OUT49
031050	VTPOS-OUT50
031051	VTPOS-OUT51
031052	VTPOS-OUT52
031053	VTPOS-OUT53
031054	VTPOS-OUT54
031055	VTPOS-OUT55
031056	VTPOS-OUT56
031057	VTPOS-OUT57
031058	VTPOS-OUT58
031059	VTPOS-OUT59
031060	VTPOS-OUT60
031061	VTPOS-OUT61
031062	VTPOS-OUT62
031063	VTPOS-OUT63
031064	VTPOS-OUT64
031065	VTPOS-OUT65
031066	VTPOS-OUT66
031067	VTPOS-OUT67
031068	VTPOS-OUT68
031069	VTPOS-OUT69
031070	VTPOS-OUT70
031071	VTPOS-OUT71
031072	VTPOS-OUT72
031073	VTPOS-OUT73
031074	VTPOS-OUT74
031075	VTPOS-OUT75
031076	VTPOS-OUT76
031077	VTPOS-OUT77
031078	VTPOS-OUT78
031079	VTPOS-OUT79

Parameter	Angle signal (▲)
031080	VTPOS-OUT80
031081	VTPOS-OUT81
031082	VTPOS-OUT82
031083	VTPOS-OUT83
031084	VTPOS-OUT84
031085	VTPOS-OUT85
031086	VTPOS-OUT86
031087	VTPOS-OUT87
031088	VTPOS-OUT88
031089	VTPOS-OUT89
031090	VTPOS-OUT90
031091	VTPOS-OUT91
031092	VTPOS-OUT92
031093	VTPOS-OUT93
031094	VTPOS-OUT94
031095	VTPOS-OUT95
031096	VTPOS-OUT96
031097	VTPOS-OUT97
031098	VTPOS-OUT98
031099	VTPOS-OUT99
031100	VTPOS-OUT100
031101	VTPOS-OUT101
031102	VTPOS-OUT102
031103	VTPOS-OUT103
031104	VTPOS-OUT104
031201	VTVEL-OUT1
031202	VTVEL-OUT2
031203	VTVEL-OUT3
031204	VTVEL-OUT4
031251	VTACC-OUT1
031252	VTACC-OUT2
031253	VTACC-OUT3
031254	VTACC-OUT4

8.6.4 Selection list 4: Speed signals

Parameter	Speed signal (△)
000050	DFIN-OUT
000100	DFSET-POUT
000250	DFOUT-OUT
001000	FIXEDPHI-0
005000	MCTRL-PHI-ACT
006000	DFRFG1-OUT
006220	CONV5-OUT
006600	SYNC1-OUT1
019521	FCODE-475/1
019522	FCODE-475/2
030000	POS-PHI-SET

8.6.5 Selection list 5: Function blocks

Parameter	Function block
000000	Empty
000050	AIN1
000055	AIN2
000070	AOUT1
000075	AOUT2
000100	DFSET
000200	DFIN
000250	DFOUT
005050	NSET
005100	MPOT1
005520	ARITPH1
005525	ARITPH2
005530	ARITPH3
005535	ARITPH4
005540	ARITPH5
005545	ARITPH6
005550	ADD1
005600	RFG1
005650	ASW1
005655	ASW2
005660	ASW3
005665	ASW4
005700	ANEG1
005705	ANEG2
005750	FIXSET1
005775	SELPH1
005780	SELPH2
005800	LIM1
005850	ABS1
005900	PT1-1
005950	DT1-1
006000	DFRFG1
006150	DB1
006200	CONV1
006205	CONV2
006210	CONV3
006215	CONV4
006220	CONV5
006230	CONVPHA1
006232	CONVPHA2
006234	CONVPHA3
006237	CONVPHPH2
006300	S&H1
006350	CURVE1
006400	FCNT1
006405	FCNT2

Parameter	Function block
006410	FCNT3
006450	SP1
006460	SP2
006550	TEACH1
006600	SYNC1
007050	CONVAPH1
007055	CONVAPH2
007060	CONVAPH3
007150	CONVAD1
007170	CONVAD2
007200	CONVDA1
007205	CONVDA2
007210	CONVDA3
008000	DISA
008050	DISPH
010000	BRK1
010250	R/L/Q
010500	AND1
010505	AND2
010510	AND3
010515	AND4
010520	AND5
010550	OR1
010555	OR2
010560	OR3
010565	OR4
010570	OR5
010600	NOT1
010605	NOT2
010610	NOT3
010615	NOT4
010620	NOT5
010650	CMP1
010655	CMP2
010660	CMP3
010700	DIGDEL1
010705	DIGDEL2
010750	TRANS1
010755	TRANS2
010900	FLIP1
010905	FLIP2
011000	CMPPH1
011005	CMPPH2
011010	CMPPH3
012000	PHINT1
012050	PHDIV1

Parameter	Function block
013000	FEVAN1
013005	FEVAN2
013010	FEVAN3
013015	FEVAN4
013020	FEVAN5
013025	FEVAN6
013050	BCD1
013065	BCD2
013080	BCD3
015100	MLP1
020000	CAN-OUT
025000	AIF-OUT
030000	POS
030050	POS-SRAMPS
031000	VTPOS
031200	VTVEL
031250	VTACC
031300	VTTIME
031350	VTPCS

8.6.6 Selection list 10: Error messages

Parameter	Error message
000000	No error
000011	OC1-TRIP
000012	OC2-TRIP
000015	OC5-TRIP
000016	OC6-TRIP
000018	OC8-TRIP
000022	LUQ-TRIP
000032	LP1-TRIP
000050	OH-TRIP
000053	OH3-TRIP
000057	OH7-TRIP
000058	OH8-TRIP
000061	CE0-TRIP
000062	CE1-TRIP
000063	CE2-TRIP
000064	CE3-TRIP
000065	CE4-TRIP
000070	U15-TRIP
000071	CCr-TRIP
000072	Pr1-TRIP
000073	Pr2-TRIP
000074	PEr-TRIP
000075	Pr0-TRIP
000077	Pr3-TRIP
000078	Pr4-TRIP
000079	PI-TRIP
000082	Sd2-TRIP
000083	Sd3-TRIP
000085	Sd5-TRIP
000086	Sd6-TRIP
000087	Sd7-TRIP
000088	Sd8-TRIP
000089	PL-TRIP
000091	EEr-TRIP
000105	H05-TRIP
000107	H07-TRIP
000110	H10-TRIP
000111	H11-TRIP
000151	P01-TRIP
000152	P02-TRIP
000153	P03-TRIP
000154	P04-TRIP
000155	P05-TRIP
000156	P06-TRIP
000157	P07-TRIP
000158	P08-TRIP

Parameter	Error message
000159	P09-TRIP
000162	P12-TRIP
000163	P13-TRIP
000164	P14-TRIP
000165	P15-TRIP
000166	P16-TRIP
000167	P17-TRIP
000168	P18-TRIP
000169	P19-TRIP
000190	nErr-TRIP
000200	NMAX-TRIP
001020	OU message
001030	LU message
001091	EEr message
002018	OC8 warning
002032	LP1 warning
002053	OH3 warning
002054	OH4 warning
002057	OH7 warning
002058	OH8 warning
002061	CE0 warning
002062	CE1 warning
002063	CE2 warning
002064	CE3 warning
002065	CE4 warning
002082	Sd2 warning
002083	Sd3 warning
002085	Sd5 warning
002086	Sd6 warning
002091	EER warning
002153	P03 warning
002163	P13 warning
002164	P14 warning
002165	P15 warning
002166	P16 warning
002167	P17 warning
002168	P18 warning
002169	P19 warning
002191	nErr warning
003091	EEr-QSP
003151	P01-QSP
003152	P02-QSP
003154	P04-QSP
003155	P05-QSP
003156	P06-QSP
003157	P07-QSP

Parameter	Error message
003158	P08-QSP
003159	P09-QSP
003162	P12-QSP
003163	P13-QSP
003164	P14-QSP
003165	P15-QSP
003166	P16-QSP
003167	P17-QSP
003168	P18-QSP
003190	nErr-QSP

8.7 Table of attributes

The attribute table describes the properties of the codes used. It enables you to create your own communication programs for the controller.

How to read the table of attributes

Column		Abbreviation	Meaning	
Code		Cxxxx	Name of the Lenze code	
Index	dec	24575 - Lenze code number	Index under which the parameter is addressed The subindex of array variables corresponds to the Lenze subcode number	Is only required for control via INTERBUS, PROFIBUS DP or system bus (CAN)
	hex	5FFFh - Lenze code number		
Data	DS	E	Data structure	Single variable (only one parameter element)
		A		Array variable (several parameter elements)
	DA	xx	Number of array elements (subcodes)	
	DT	B8	Data type	1 byte bit-coded
		B16		2 bytes bit-coded
		B32		4 bytes bit-coded
		FIX32		32-bit value with sign; decimal with four decimal places
		I32		4 bytes with sign
		U32		4 bytes without sign
		VS		ASCII string
	Format	VD	LECOM format (see also Operating Instructions of the bus module)	ASCII decimal format
		VH		ASCII hexadecimal format
		VS		String format
		VO		Octet string format for data blocks
	DL		Data length in byte	The column "Important" contains further information
Access	LCM-R/W	Ra	Access authorisation for LECOM	Reading is always permitted
		Wa		Writing is always permitted
		W		Writing is restricted
	Condition	CINH	Condition for writing	Writing permitted only when controller is inhibited

Code	Index		Data					Access	
	dec	hex	DS	DA	DT	Format	DL	LCM-R/W	Condition
C0002	24573	5FFDh	E	1	FIX32	VD	4	Ra/W	CINH
C0003	24572	5FFCh	E	1	FIX32	VD	4	Ra/Wa	
C0004	24571	5FFBh	E	1	FIX32	VD	4	Ra/Wa	
C0005	24570	5FFAh	E	1	FIX32	VD	4	Ra/W	CINH
C0006	24569	5FF9h	E	1	FIX32	VD	4	Ra/W	CINH
C0009	24566	5FF6h	E	1	FIX32	VD	4	Ra/Wa	
C0011	24564	5FF4h	E	1	FIX32	VD	4	Ra/W	CINH
C0012	24563	5FF3h	E	1	FIX32	VD	4	Ra/Wa	
C0013	24562	5FF2h	E	1	FIX32	VD	4	Ra/Wa	
C0017	24558	5FEEh	E	1	FIX32	VD	4	Ra/Wa	
C0018	24557	5FEDh	E	1	FIX32	VD	4	Ra/Wa	
C0019	24556	5FECh	E	1	FIX32	VD	4	Ra/Wa	
C0022	24553	5FE9h	E	1	FIX32	VD	4	Ra/Wa	
C0025	24550	5FE6h	E	1	FIX32	VD	4	Ra/W	CINH
C0026	24549	5FE5h	A	2	FIX32	VD	4	Ra/Wa	
C0027	24548	5FE4h	A	2	FIX32	VD	4	Ra/Wa	
C0030	24545	5FE1h	E	1	FIX32	VD	4	Ra/Wa	
C0032	24543	5FDFh	E	1	FIX32	VD	4	Ra/Wa	
C0033	24542	5FDEh	E	1	FIX32	VD	4	Ra/Wa	
C0034	24541	5FDDh	E	1	FIX32	VD	4	Ra/Wa	
C0037	24538	5FDAh	E	1	FIX32	VD	4	Ra/Wa	
C0039	24536	5FD8h	A	15	FIX32	VD	4	Ra/Wa	
C0040	24535	5FD7h	E	1	FIX32	VD	4	Ra/Wa	
C0042	24533	5FD5h	E	1	FIX32	VD	4	Ra	
C0043	24532	5FD4h	E	1	FIX32	VD	4	Ra/Wa	
C0045	24530	5FD2h	E	1	FIX32	VD	4	Ra	
C0046	24529	5FD1h	E	1	FIX32	VD	4	Ra	
C0049	24526	5FCEh	E	1	FIX32	VD	4	Ra	
C0050	24525	5FCDh	E	1	FIX32	VD	4	Ra	
C0051	24524	5FCCh	E	1	FIX32	VD	4	Ra	
C0052	24523	5FCBh	E	1	FIX32	VD	4	Ra	
C0053	24522	5FCAh	E	1	FIX32	VD	4	Ra	
C0054	24521	5FC9h	E	1	FIX32	VD	4	Ra	
C0056	24519	5FC7h	E	1	FIX32	VD	4	Ra	
C0057	24518	5FC6h	E	1	FIX32	VD	4	Ra	
C0058	24517	5FC5h	E	1	FIX32	VD	4	Ra/Wa	
C0059	24516	5FC4h	E	1	FIX32	VD	4	Ra	
C0060	24515	5FC3h	E	1	FIX32	VD	4	Ra	
C0061	24514	5FC2h	E	1	FIX32	VD	4	Ra	
C0063	24512	5FC0h	E	1	FIX32	VD	4	Ra	
C0064	24511	5FBFh	E	1	FIX32	VD	4	Ra	
C0066	24509	5FBDh	E	1	FIX32	VD	4	Ra	
C0067	24508	5FBCh	E	1	FIX32	VD	4	Ra	
C0070	24505	5FB9h	E	1	FIX32	VD	4	Ra/Wa	
C0071	24504	5FB8h	E	1	FIX32	VD	4	Ra/Wa	
C0072	24503	5FB7h	E	1	FIX32	VD	4	Ra/Wa	

Code	Index		Data					Access	
	dec	hex	DS	DA	DT	Format	DL	LCM-R/W	Condition
C0075	24500	5FB4h	E	1	FIX32	VD	4	Ra/Wa	
C0076	24499	5FB3h	E	1	FIX32	VD	4	Ra/Wa	
C0077	24498	5FB2h	E	1	FIX32	VD	4	Ra/Wa	
C0078	24497	5FB1h	E	1	FIX32	VD	4	Ra/Wa	
C0081	24494	5FAEh	E	1	FIX32	VD	4	Ra/W	CINH
C0084	24491	5FABh	E	1	FIX32	VD	4	Ra/W	CINH
C0085	24490	5FAAh	E	1	FIX32	VD	4	Ra/W	CINH
C0086	24489	5FA9h	E	1	FIX32	VD	4	Ra/W	CINH
C0087	24488	5FA8h	E	1	FIX32	VD	4	Ra/W	CINH
C0088	24487	5FA7h	E	1	FIX32	VD	4	Ra/W	CINH
C0089	24486	5FA6h	E	1	FIX32	VD	4	Ra/W	CINH
C0090	24485	5FA5h	E	1	FIX32	VD	4	Ra/W	CINH
C0091	24484	5FA4h	E	1	FIX32	VD	4	Ra/W	CINH
C0093	24482	5FA2h	E	1	FIX32	VD	4	Ra	
C0094	24481	5FA1h	E	1	FIX32	VD	4	Ra/Wa	
C0095	24480	5FA0h	E	1	FIX32	VD	4	Ra/W	CINH
C0096	24479	5F9Fh	A	2	FIX32	VD	4	Ra/Wa	
C0099	24476	5F9Ch	E	1	FIX32	VD	4	Ra	
C0101	24474	5F9Ah	A	15	FIX32	VD	4	Ra/Wa	
C0103	24472	5F98h	A	15	FIX32	VD	4	Ra/Wa	
C0105	24470	5F96h	E	1	FIX32	VD	4	Ra/Wa	
C0108	24467	5F93h	A	2	FIX32	VD	4	Ra/Wa	
C0109	24466	5F92h	A	2	FIX32	VD	4	Ra/Wa	
C0114	24461	5F8Dh	A	5	FIX32	VD	4	Ra/Wa	
C0116	24459	5F8Bh	A	32	FIX32	VD	4	Ra/W	CINH
C0117	24458	5F8Ah	A	4	FIX32	VD	4	Ra/W	CINH
C0118	24457	5F89h	A	4	FIX32	VD	4	Ra/Wa	
C0120	24455	5F87h	E	1	FIX32	VD	4	Ra/Wa	
C0121	24454	5F86h	E	1	FIX32	VD	4	Ra/Wa	
C0122	24453	5F85h	E	1	FIX32	VD	4	Ra/Wa	
C0125	24450	5F82h	E	1	FIX32	VD	4	Ra/Wa	
C0126	24449	5F81h	E	1	FIX32	VD	4	Ra/Wa	
C0127	24448	5F80h	E	1	FIX32	VD	4	Ra/Wa	
C0128	24447	5F79h	E	1	FIX32	VD	4	Ra/Wa	
C0130	24445	5F7Dh	E	1	FIX32	VD	4	Ra	
C0134	24441	5F79h	E	1	FIX32	VD	4	Ra/Wa	
C0135	24440	5F78h	E	1	B16	VH	2		
C0136	24439	5F77h	A	3	B16	VH	2	Ra	
C0141	24434	5F72h	E	1	FIX32	VD	4	Ra/Wa	
C0142	24433	5F71h	E	1	FIX32	VD	4	Ra/Wa	
C0150	24425	5F69h	E	1	B16	VH	2	Ra	
C0151	24424	5F68h	E	1	B32	VH	4	Ra	
C0155	24420	5F64h	E	1	B16	VH	2	Ra	
C0156	24419	5F63h	A	7	FIX32	VD	4	Ra/W	CINH
C0157	24418	5F62h	A	7	FIX32	VD	4	Ra	
C0161	24414	5F5Eh	E	1	FIX32	VD	4	Ra	
C0167	24408	5F58h	E	1	FIX32	VD	4	Ra/Wa	

Code	Index		Data					Access	
	dec	hex	DS	DA	DT	Format	DL	LCM-R/W	Condition
C0168	24407	5F57h	A	8	FIX32	VD	4	Ra	
C0169	24406	5F56h	A	8	U32	VH	4	Ra	
C0170	24405	5F55h	A	8	FIX32	VD	4	Ra	
C0173	24402	5F52h	E	1	FIX32	VD	4	Ra/Wa	
C0178	24397	5F4Dh	E	1	U32	VH	4	Ra	
C0179	24396	5F4Ch	E	1	U32	VH	4	Ra	
C0182	24393	5F49h	E	1	FIX32	VD	4	Ra/Wa	
C0183	24392	5F48h	E	1	FIX32	VD	4	Ra	
C0190	24385	5F41h	E	1	FIX32	VD	4	Ra/Wa	
C0195	24380	5F3Ch	E	1	FIX32	VD	4	Ra/Wa	
C0196	24379	5F3Bh	E	1	FIX32	VD	4	Ra/Wa	
C0200	24375	5F37h	E	1	VS	VS	?	Ra	
C0201	24374	5F36h	E	1	VS	VS	?	Ra	
C0202	24373	5F35h	E	1	FIX32	VD	4	Ra	
C0203	24372	5F34h	E	1	VS	VS	?	Ra	
C0204	24371	5F33h	E	1	FIX32	VD	4	Ra	
C0206	24369	5F31h	E	1	VS	VS	?	Ra	
C0207	24368	5F30h	E	1	VS	VS	?	Ra	
C0208	24367	5F2Fh	E	1	VS	VS	?	Ra	
C0209	24366	5F2Eh	E	1	VS	VS	?	Ra	
C0220	24355	5F23h	E	1	FIX32	VD	4	Ra/Wa	
C0221	24354	5F22h	E	1	FIX32	VD	4	Ra/Wa	
C0222	24353	5F21h	E	1	FIX32	VD	4	Ra/Wa	
C0223	24352	5F20h	E	1	FIX32	VD	4	Ra/Wa	
C0224	24351	5F1Fh	E	1	FIX32	VD	4	Ra/Wa	
C0241	24334	5F0Eh	E	1	FIX32	VD	4	Ra/Wa	
C0244	24331	5F0Bh	E	1	FIX32	VD	4	Ra/Wa	
C0250	24325	5F05h	E	1	FIX32	VD	4	Ra/Wa	
C0252	24323	5F03h	E	1	I32	VH	4	Ra/Wa	
C0253	24322	5F02h	E	1	FIX32	VD	4	Ra/Wa	
C0254	24321	5F01h	E	1	FIX32	VD	4	Ra/Wa	
C0255	24320	5F00h	E	1	U32	VH	4	Ra/Wa	
C0260	24315	5EFBh	E	1	FIX32	VD	4	Ra/Wa	
C0261	24314	5EFAh	E	1	FIX32	VD	4	Ra/Wa	
C0262	24313	5EF9h	E	1	FIX32	VD	4	Ra/Wa	
C0263	24312	5EF8h	E	1	FIX32	VD	4	Ra/Wa	
C0264	24311	5EF7h	E	1	FIX32	VD	4	Ra/Wa	
C0265	24310	5EF6h	E	1	FIX32	VD	4	Ra/Wa	
C0267	24308	5EF4h	A	2	FIX32	VD	4	Ra/W	CINH
C0268	24307	5EF3h	E	1	FIX32	VD	4	Ra/W	CINH
C0269	24306	5EF2h	A	3	FIX32	VD	4	Ra	
C0325	24250	5EBAh	E	1	FIX32	VD	4	Ra/Wa	
C0326	24249	5EB9h	E	1	FIX32	VD	4	Ra/Wa	
C0327	24248	5EB8h	E	1	FIX32	VD	4	Ra/Wa	
C0328	24247	5EB7h	E	1	FIX32	VD	4	Ra/Wa	
C0329	24246	5EB6h	E	1	FIX32	VD	4	Ra/Wa	
C0332	24243	5EB3h	E	1	FIX32	VD	4	Ra/Wa	

Code	Index		Data					Access	
	dec	hex	DS	DA	DT	Format	DL	LCM-R/W	Condition
C0333	24242	5EB2h	E	1	FIX32	VD	4	Ra/Wa	
C0336	24239	5EAFh	E	1	FIX32	VD	4	Ra	
C0337	24238	5EAEh	E	1	FIX32	VD	4	Ra/Wa	
C0338	24237	5EADh	E	1	FIX32	VD	4	Ra/Wa	
C0339	24236	5EACh	A	2	FIX32	VD	4	Ra/W	CINH
C0340	24235	5EABh	A	2	FIX32	VD	4	Ra	
C0350	24225	5EA1h	E	1	FIX32	VD	4	Ra/Wa	
C0351	24224	5EA0h	E	1	FIX32	VD	4	Ra/Wa	
C0352	24223	5E9Fh	E	1	FIX32	VD	4	Ra/Wa	
C0353	24222	5E9Eh	A	3	FIX32	VD	4	Ra/Wa	
C0354	24221	5E9Dh	A	6	FIX32	VD	4	Ra/Wa	
C0355	24220	5E9Ch	A	6	FIX32	VD	4	Ra	
C0356	24219	5E9Bh	A	4	FIX32	VD	4	Ra/Wa	
C0357	24218	5E9Ah	A	3	FIX32	VD	4	Ra/Wa	
C0358	24217	5E99h	E	1	FIX32	VD	4	Ra/Wa	
C0359	24216	5E98h	E	1	FIX32	VD	4	Ra	
C0360	24215	5E97h	A	12	FIX32	VD	4	Ra	
C0361	24214	5E96h	A	12	FIX32	VD	4	Ra	
C0362	24213	5E95h	E	1	FIX32	VD	4	Ra	
C0363	24212	5E94h	E	1	FIX32	VD	4	Ra/Wa	
C0364	24211	5E93h	E	1	FIX32	VD	4	Ra/W	CINH
C0365	24210	5E92h	E	1	FIX32	VD	4	Ra	
C0366	24209	5E91h	E	1	FIX32	VD	4	Ra/Wa	
C0367	24208	5E90h	E	1	FIX32	VD	4	Ra/Wa	
C0368	24207	5E8Fh	E	1	FIX32	VD	4	Ra/Wa	
C0369	24206	5E8Eh	E	1	FIX32	VD	4	Ra/Wa	
C0400	24175	5E6Fh	E	1	FIX32	VD	4	Ra	
C0402	24173	5E6Dh	E	1	FIX32	VD	4	Ra/W	CINH
C0403	24172	5E6Ch	E	1	FIX32	VD	4	Ra/W	CINH
C0404	24171	5E6Bh	A	2	FIX32	VD	4	Ra	
C0405	24170	5E6Ah	E	1	FIX32	VD	4	Ra	
C0407	24168	5E68h	E	1	FIX32	VD	4	Ra/W	CINH
C0408	24167	5E67h	E	1	FIX32	VD	4	Ra/W	CINH
C0409	24166	5E66h	A	2	FIX32	VD	4	Ra	
C0416	24159	5E5Fh	E	1	U32	VH	4	Ra/W	CINH
C0420	24155	5E5Bh	E	1	FIX32	VD	4	Ra/W	CINH
C0421	24154	5E5Ah	E	1	FIX32	VD	4	Ra/W	CINH
C0425	24150	5E56h	E	1	FIX32	VD	4	Ra/Wa	
C0426	24149	5E55h	E	1	FIX32	VD	4	Ra	
C0427	24148	5E54h	E	1	FIX32	VD	4	Ra/Wa	
C0429	24146	5E52h	E	1	FIX32	VD	4	Ra/Wa	
C0430	24145	5E51h	A	4	FIX32	VD	4	Ra/Wa	
C0431	24144	5E50h	E	1	FIX32	VD	4	Ra/W	CINH
C0432	24143	5E4Fh	E	1	FIX32	VD	4	Ra/W	CINH
C0433	24142	5E4Eh	E	1	FIX32	VD	4	Ra/W	CINH
C0434	24141	5E4Dh	A	3	FIX32	VD	4	Ra	
C0436	24139	5E4Bh	E	1	FIX32	VD	4	Ra/W	CINH

Code	Index		Data					Access	
	dec	hex	DS	DA	DT	Format	DL	LCM-R/W	Condition
C0437	24138	5E4Ah	E	1	FIX32	VD	4	Ra/W	CINH
C0438	24137	5E49h	E	1	FIX32	VD	4	Ra/W	CINH
C0439	24136	5E48h	A	3	FIX32	VD	4	Ra	
C0440	24135	5E47h	E	1	FIX32	VD	4	Ra/W	CINH
C0441	24134	5E46h	E	1	FIX32	VD	4	Ra	
C0443	24132	5E44h	E	1	B8	VH	1	Ra	
C0444	24131	5E43h	A	4	FIX32	VD	4	Ra	
C0450	24125	5E3Dh	E	1	FIX32	VD	4	Ra/W	CINH
C0451	24124	5E3Ch	E	1	FIX32	VD	4	Ra/W	CINH
C0452	24123	5E3Bh	E	1	FIX32	VD	4	Ra/W	CINH
C0458	24117	5E35h	A	2	FIX32	VD	4	Ra	
C0459	24116	5E34h	E	1	FIX32	VD	4	Ra	
C0464	24111	5E2Fh	E	1	FIX32	VD	4	Ra	
C0465	24110	5E2Eh	A	50	FIX32	VD	4	Ra/W	CINH
C0466	24109	5E2Dh	E	1	FIX32	VD	4	Ra	
C0469	24106	5E2Ah	E	1	FIX32	VD	4	Ra/W	CINH
C0470	24105	5E29h	A	4	B8	VH	1	Ra/Wa	
C0471	24104	5E28h	E	1	B32	VH	4	Ra/Wa	
C0472	24103	5E27h	A	20	FIX32	VD	4	Ra/Wa	
C0473	24102	5E26h	A	10	FIX32	VD	4	Ra/Wa	
C0474	24101	5E25h	A	10	I32	VH	4	Ra/Wa	
C0475	24100	5E24h	A	2	FIX32	VD	4	Ra/Wa	
C0490	24085	5E15h	E	1	FIX32	VD	4	Ra/W	CINH
C0495	24080	5E10h	E	1	FIX32	VD	4	Ra/W	CINH
C0497	24078	5E0Eh	E	1	FIX32	VD	4	Ra/Wa	
C0517	24058	5DFAh	A	32	FIX32	VD	4	Ra/Wa	
C0520	24055	5DF7h	E	1	FIX32	VD	4	Ra/W	CINH
C0521	24054	5DF6h	E	1	FIX32	VD	4	Ra/W	CINH
C0522	24053	5DF5h	E	1	FIX32	VD	4	Ra/W	CINH
C0523	24052	5DF4h	E	1	FIX32	VD	4	Ra/W	CINH
C0524	24051	5DF3h	E	1	FIX32	VD	4	Ra/W	CINH
C0525	24050	5DF2h	E	1	FIX32	VD	4	Ra/W	CINH
C0526	24049	5DF1h	E	1	FIX32	VD	4	Ra/W	CINH
C0527	24048	5DF0h	E	1	FIX32	VD	4	Ra/W	CINH
C0528	24047	5DEFh	A	2	I32	VH	4	Ra	
C0529	24046	5DEEh	E	1	FIX32	VD	4	Ra/Wa	
C0530	24045	5DEDh	E	1	FIX32	VD	4	Ra/Wa	
C0531	24044	5DECh	E	1	FIX32	VD	4	Ra/Wa	
C0532	24043	5DEBh	E	1	FIX32	VD	4	Ra/Wa	
C0533	24042	5DEAh	E	1	FIX32	VD	4	Ra/Wa	
C0534	24041	5DE9h	E	1	FIX32	VD	4	Ra/Wa	
C0535	24040	5DE8h	E	1	FIX32	VD	4	Ra/Wa	
C0536	24039	5DE7h	A	3	FIX32	VD	4	Ra	
C0537	24038	5DE6h	E	1	FIX32	VD	4	Ra	
C0538	24037	5DE5h	A	3	FIX32	VD	4	Ra	
C0539	24036	5DE4h	E	1	FIX32	VD	4	Ra	
C0540	24035	5DE3h	E	1	FIX32	VD	4	Ra/Wa	

Code	Index		Data					Access	
	dec	hex	DS	DA	DT	Format	DL	LCM-R/W	Condition
C0541	24034	5DE2h	E	1	FIX32	VD	4	Ra/W	CINH
C0542	24033	5DE1h	E	1	FIX32	VD	4	Ra/W	CINH
C0544	24031	5DDFh	E	1	FIX32	VD	4	Ra/W	CINH
C0545	24030	5DDEh	E	1	FIX32	VD	4	Ra/Wa	
C0546	24029	5DDDh	E	1	U32	VH	4	Ra/Wa	
C0547	24028	5DDCh	E	1	FIX32	VD	4	Ra	
C0548	24027	5DDBh	E	1	FIX32	VD	4	Ra	
C0549	24026	5DDAh	E	1	FIX32	VD	4	Ra	
C0560	24015	5DCFh	A	15	FIX32	VD	4	Ra/Wa	
C0561	24014	5DCEh	E	1	FIX32	VD	4	Ra/W	CINH
C0562	24013	5DCDh	A	4	FIX32	VD	4	Ra/W	CINH
C0563	24012	5DCCh	E	1	FIX32	VD	4	Ra	
C0564	24011	5DCBh	A	4	FIX32	VD	4	Ra	
C0570	24005	5DC5h	E	1	FIX32	VD	4	Ra/W	CINH
C0571	24004	5DC4h	E	1	FIX32	VD	4	Ra/W	CINH
C0572	24003	5DC3h	E	1	FIX32	VD	4	Ra	
C0573	24002	5DC2h	E	1	FIX32	VD	4	Ra	
C0577	23998	5DBEh	E	1	FIX32	VD	4	Ra/Wa	
C0578	23997	5DBDh	E	1	FIX32	VD	4	Ra/Wa	
C0581	23994	5DBAh	E	1	FIX32	VD	4	Ra/Wa	
C0582	23993	5DB9h	E	1	FIX32	VD	4	Ra/Wa	
C0583	23992	5DB8h	E	1	FIX32	VD	4	Ra/Wa	
C0584	23991	5DB7h	E	1	FIX32	VD	4	Ra/Wa	
C0585	23990	5DB6h	E	1	FIX32	VD	4	Ra/Wa	
C0586	23989	5DB5h	E	1	FIX32	VD	4	Ra/Wa	
C0587	23988	5DB4h	E	1	FIX32	VD	4	Ra/Wa	
C0588	23987	5DB3h	E	1	FIX32	VD	4	Ra/Wa	
C0589	23986	5DB2h	E	1	FIX32	VD	4	Ra/Wa	
C0590	23985	5DB1h	E	1	FIX32	VD	4	Ra/Wa	
C0591	23984	5DB0h	E	1	FIX32	VD	4	Ra/Wa	
C0592	23983	5DAFh	E	1	FIX32	VD	4	Ra/Wa	
C0593	23982	5DAEh	E	1	FIX32	VD	4	Ra/Wa	
C0594	23981	5DADh	E	1	FIX32	VD	4	Ra/Wa	
C0595	23980	5DACh	E	1	FIX32	VD	4	Ra/Wa	
C0596	23979	5DABh	E	1	FIX32	VD	4	Ra/Wa	
C0597	23978	5DAAh	E	1	FIX32	VD	4	Ra/Wa	
C0598	23977	5DA9h	E	1	FIX32	VD	4	Ra/Wa	
C0599	23976	5DA8h	E	1	FIX32	VD	4	Ra/Wa	
C0600	23975	5DA7h	E	1	FIX32	VD	4	Ra/Wa	
C0601	23974	5DA6h	A	2	FIX32	VD	4	Ra/W	CINH
C0602	23973	5DA5h	A	2	FIX32	VD	4	Ra	
C0606	23966	5D9Eh	E	1	FIX32	VD	4	Ra/Wa	
C0610	23965	5D9Dh	A	3	FIX32	VD	4	Ra/W	CINH
C0611	23964	5D9Ch	A	3	FIX32	VD	4	Ra	
C0620	23955	5D93h	E	1	FIX32	VD	4	Ra/Wa	
C0621	23954	5D92h	E	1	FIX32	VD	4	Ra/Wa	
C0622	23953	5D91h	E	1	FIX32	VD	4	Ra/W	CINH

Code	Index		Data					Access	
	dec	hex	DS	DA	DT	Format	DL	LCM-R/W	Condition
C0623	23952	5D90h	E	1	FIX32	VD	4	Ra	
C0630	23945	5D89h	E	1	FIX32	VD	4	Ra/Wa	
C0631	23944	5D88h	E	1	FIX32	VD	4	Ra/Wa	
C0632	23943	5D87h	E	1	FIX32	VD	4	Ra/W	CINH
C0633	23942	5D86h	E	1	FIX32	VD	4	Ra	
C0640	23935	5D7Fh	E	1	FIX32	VD	4	Ra/Wa	
C0641	23934	5D7Eh	E	1	FIX32	VD	4	Ra/W	CINH
C0642	23933	5D7Dh	E	1	FIX32	VD	4	Ra	
C0650	23925	5D75h	E	1	FIX32	VD	4	Ra/Wa	
C0651	23924	5D74h	E	1	FIX32	VD	4	Ra/Wa	
C0652	23923	5D73h	E	1	FIX32	VD	4	Ra/W	CINH
C0653	23922	5D72h	E	1	FIX32	VD	4	Ra/Wa	
C0654	23921	5D71h	E	1	FIX32	VD	4	Ra	
C0655	23920	5D70h	E	1	FIX32	VD	4	Ra/Wa	
C0656	23919	5D6Fh	E	1	FIX32	VD	4	Ra/Wa	
C0657	23918	5D6Eh	E	1	FIX32	VD	4	Ra/W	CINH
C0658	23917	5D6Dh	E	1	FIX32	VD	4	Ra	
C0661	23914	5D6Ah	E	1	FIX32	VD	4	Ra/W	CINH
C0662	23913	5D69h	E	1	FIX32	VD	4	Ra	
C0671	23904	5D60h	E	1	FIX32	VD	4	Ra/Wa	
C0672	23903	5D5Fh	E	1	FIX32	VD	4	Ra/Wa	
C0673	23902	5D5Eh	E	1	FIX32	VD	4	Ra/W	CINH
C0674	23901	5D5Dh	E	1	FIX32	VD	4	Ra/W	CINH
C0675	23900	5D5Ch	E	1	FIX32	VD	4	Ra/W	CINH
C0676	23899	5D5Bh	A	2	FIX32	VD	4	Ra	
C0677	23898	5D5Ah	E	1	FIX32	VD	4	Ra	
C0680	23895	5D57h	E	1	FIX32	VD	4	Ra/Wa	
C0681	23894	5D56h	E	1	FIX32	VD	4	Ra/Wa	
C0682	23893	5D55h	E	1	FIX32	VD	4	Ra/Wa	
C0683	23892	5D54h	A	2	FIX32	VD	4	Ra/W	CINH
C0684	23891	5D53h	A	2	FIX32	VD	4	Ra	
C0685	23890	5D52h	E	1	FIX32	VD	4	Ra/Wa	
C0686	23889	5D51h	E	1	FIX32	VD	4	Ra/Wa	
C0687	23888	5D50h	E	1	FIX32	VD	4	Ra/Wa	
C0688	23887	5D4Fh	A	2	FIX32	VD	4	Ra/W	CINH
C0689	23886	5D4Eh	A	2	FIX32	VD	4	Ra	
C0690	23885	5D4Dh	E	1	FIX32	VD	4	Ra/Wa	
C0691	23884	5D4Ch	E	1	FIX32	VD	4	Ra/Wa	
C0692	23883	5D4Bh	E	1	FIX32	VD	4	Ra/Wa	
C0693	23882	5D4Ah	A	2	FIX32	VD	4	Ra/W	CINH
C0694	23881	5D49h	A	2	FIX32	VD	4	Ra	
C0700	23875	5D43h	E	1	FIX32	VD	4	Ra/W	CINH
C0701	23874	5D42h	E	1	FIX32	VD	4	Ra	
C0703	23872	5D40h	E	1	FIX32	VD	4	Ra/W	CINH
C0704	23871	5D3Fh	E	1	FIX32	VD	4	Ra	
C0710	23865	5D39h	E	1	FIX32	VD	4	Ra/Wa	
C0711	23864	5D38h	E	1	FIX32	VD	4	Ra/Wa	

Code	Index		Data					Access	
	dec	hex	DS	DA	DT	Format	DL	LCM-R/W	Condition
C0713	23862	5D36h	E	1	FIX32	VD	4	Ra/W	CINH
C0714	23861	5D35h	E	1	FIX32	VD	4	Ra	
C0715	23860	5D34h	E	1	FIX32	VD	4	Ra/Wa	
C0716	23859	5D33h	E	1	FIX32	VD	4	Ra/Wa	
C0718	23857	5D31h	E	1	FIX32	VD	4	Ra/W	CINH
C0719	23856	5D30h	E	1	FIX32	VD	4	Ra	
C0720	23855	5D2Fh	E	1	FIX32	VD	4	Ra/Wa	
C0721	23854	5D2Eh	E	1	FIX32	VD	4	Ra/Wa	
C0723	23852	5D2Ch	E	1	FIX32	VD	4	Ra/W	CINH
C0724	23851	5D2Bh	E	1	FIX32	VD	4	Ra	
C0725	23850	5D2Ah	E	1	FIX32	VD	4	Ra/Wa	
C0726	23849	5D29h	E	1	FIX32	VD	4	Ra/Wa	
C0728	23847	5D27h	E	1	FIX32	VD	4	Ra/W	CINH
C0729	23846	5D26h	E	1	FIX32	VD	4	Ra	
C0744	23831	5D17h	E						
C0750	23825	5D11h	E	1	FIX32	VD	4	Ra/Wa	
C0751	23824	5D10h	E	1	FIX32	VD	4	Ra/Wa	
C0752	23823	5D0Fh	E	1	FIX32	VD	4	Ra/Wa	
C0753	23822	5D0Eh	E	1	FIX32	VD	4	Ra/Wa	
C0754	23821	5D0Dh	E	1	U32	VH	4	Ra/Wa	
C0755	23820	5D0Ch	E	1	FIX32	VD	4	Ra/Wa	
C0756	23819	5D0Bh	E	1	I32	VH	4	Ra/Wa	
C0757	23818	5D0Ah	E	1	FIX32	VD	4	Ra/Wa	
C0758	23817	5D09h	E	1	FIX32	VD	4	Ra/W	CINH
C0759	23816	5D08h	E	1	FIX32	VD	4	Ra/W	CINH
C0760	23815	5D07h	E	1	FIX32	VD	4	Ra/W	CINH
C0761	23814	5D06h	E	1	FIX32	VD	4	Ra/W	CINH
C0764	23811	5D03h	A	3	FIX32	VD	4	Ra	
C0765	23810	5D02h	E	1	FIX32	VD	4	Ra	
C0766	23809	5D01h	E	1	FIX32	VD	4	Ra/Wa	
C0770	23805	5CFDh	E	1	FIX32	VD	4	Ra/W	CINH
C0771	23804	5CFCh	E	1	FIX32	VD	4	Ra/W	CINH
C0772	23803	5CFBh	E	1	FIX32	VD	4	Ra/W	CINH
C0773	23802	5CFAh	A	3	FIX32	VD	4	Ra	
C0775	23800	5CF8h	E	1	FIX32	VD	4	Ra/W	CINH
C0776	23799	5CF7h	E	1	FIX32	VD	4	Ra/W	CINH
C0777	23798	5CF6h	E	1	FIX32	VD	4	Ra/W	CINH
C0778	23797	5CF5h	A	3	FIX32	VD	4	Ra	
C0780	23795	5CF3h	E	1	FIX32	VD	4	Ra/W	CINH
C0781	23794	5CF2h	E	1	FIX32	VD	4	Ra/W	CINH
C0782	23793	5CF1h	E	1	FIX32	VD	4	Ra/W	CINH
C0783	23792	5CF0h	E	1	FIX32	VD	4	Ra/W	CINH
C0784	23791	5CEFh	E	1	FIX32	VD	4	Ra/W	CINH
C0785	23790	5CEEh	E	1	FIX32	VD	4	Ra/W	CINH
C0786	23789	5CEDh	E	1	FIX32	VD	4	Ra/W	CINH
C0787	23788	5CECh	A	4	FIX32	VD	4	Ra/W	CINH
C0788	23787	5CEBh	A	4	FIX32	VD	4	Ra/W	CINH

Code	Index		Data					Access	
	dec	hex	DS	DA	DT	Format	DL	LCM-R/W	Condition
C0789	23786	5CEAh	E	1	FIX32	VD	4	Ra/W	CINH
C0790	23785	5CE9h	E	1	FIX32	VD	4	Ra/W	CINH
C0798	23777	5CE1h	A	2	FIX32	VD	4	Ra	
C0799	23776	5CE0h	A	13	FIX32	VD	4	Ra	
C0800	23775	5CDFh	E	1	FIX32	VD	4	Ra/W	CINH
C0801	23774	5CDEh	E	1	FIX32	VD	4	Ra/W	CINH
C0802	23773	5CDDh	E	1	FIX32	VD	4	Ra/W	CINH
C0803	23772	5CDCh	E	1	FIX32	VD	4	Ra/W	CINH
C0804	23771	5CDBh	E	1	FIX32	VD	4	Ra/W	CINH
C0805	23770	5CDAh	E	1	FIX32	VD	4	Ra/W	CINH
C0808	23767	5CD7h	A	4	FIX32	VD	4	Ra	
C0809	23766	5CD6h	A	2	FIX32	VD	4	Ra	
C0810	23765	5CD5h	A	2	FIX32	VD	4	Ra/W	CINH
C0811	23764	5CD4h	E	1	FIX32	VD	4	Ra/W	CINH
C0812	23763	5CD3h	A	2	FIX32	VD	4	Ra	
C0813	23762	5CD2h	E	1	FIX32	VD	4	Ra	
C0815	23760	5CD0h	A	2	FIX32	VD	4	Ra/W	CINH
C0816	23759	5CCFh	E	1	FIX32	VD	4	Ra/W	CINH
C0817	23758	5CCEh	A	2	FIX32	VD	4	Ra	
C0818	23757	5CCDh	E	1	FIX32	VD	4	Ra	
C0820	23755	5CCBh	A	3	FIX32	VD	4	Ra/W	CINH
C0821	23754	5CCAh	A	3	FIX32	VD	4	Ra	
C0822	23753	5CC9h	A	3	FIX32	VD	4	Ra/W	CINH
C0823	23752	5CC8h	A	3	FIX32	VD	4	Ra	
C0824	23751	5CC7h	A	3	FIX32	VD	4	Ra/W	CINH
C0825	23750	5CC6h	A	3	FIX32	VD	4	Ra	
C0826	23749	5CC5h	A	3	FIX32	VD	4	Ra/W	CINH
C0827	23748	5CC4h	A	3	FIX32	VD	4	Ra	
C0828	23747	5CC3h	A	3	FIX32	VD	4	Ra/W	CINH
C0829	23746	5CC2h	A	3	FIX32	VD	4	Ra	
C0830	23745	5CC1h	A	3	FIX32	VD	4	Ra/W	CINH
C0831	23744	5CC0h	A	3	FIX32	VD	4	Ra	
C0832	23743	5CBFh	A	3	FIX32	VD	4	Ra/W	CINH
C0833	23742	5CBEh	A	3	FIX32	VD	4	Ra	
C0834	23741	5CBDh	A	3	FIX32	VD	4	Ra/W	CINH
C0835	23740	5CBCh	A	3	FIX32	VD	4	Ra	
C0836	23739	5CBBh	A	3	FIX32	VD	4	Ra/W	CINH
C0837	23738	5CBAh	A	3	FIX32	VD	4	Ra	
C0838	23737	5CB9h	A	3	FIX32	VD	4	Ra/W	CINH
C0839	23736	5CB8h	A	3	FIX32	VD	4	Ra	
C0840	23735	5CB7h	E	1	FIX32	VD	4	Ra/W	CINH
C0841	23734	5CB6h	E	1	FIX32	VD	4	Ra	
C0842	23733	5CB5h	E	1	FIX32	VD	4	Ra/W	CINH
C0843	23732	5CB4h	E	1	FIX32	VD	4	Ra	
C0844	23731	5CB3h	E	1	FIX32	VD	4	Ra/W	CINH
C0845	23730	5CB2h	E	1	FIX32	VD	4	Ra	
C0846	23729	5CB1h	E	1	FIX32	VD	4	Ra/W	CINH

Code	Index		Data					Access	
	dec	hex	DS	DA	DT	Format	DL	LCM-R/W	Condition
C0847	23728	5CB0h	E	1	FIX32	VD	4	Ra	
C0848	23727	5CAFh	E	1	FIX32	VD	4	Ra/W	CINH
C0849	23726	5CAEh	E	1	FIX32	VD	4	Ra	
C0850	23725	5CADh	A	3	FIX32	VD	4	Ra/W	CINH
C0851	23724	5CACh	E	1	FIX32	VD	4	Ra/W	CINH
C0852	23723	5CABh	E	1	FIX32	VD	4	Ra/Wa	
C0853	23722	5CAAh	E	1	FIX32	VD	4	Ra/Wa	
C0854	23721	5CA9h	E	1	FIX32	VD	4	Ra/Wa	
C0855	23720	5CA8h	A	2	B16	VH	2	Ra	
C0856	23719	5CA7h	A	3	I32	VH	4	Ra	
C0857	23718	5CA6h	E	1	I32	VH	4	Ra	
C0858	23717	5CA5h	A	3	FIX32	VD	4	Ra	
C0859	23716	5CA4h	E	1	I32	VH	4	Ra	
C0860	23715	5CA3h	A	11	FIX32	VD	4	Ra/W	CINH
C0861	23714	5CA2h	A	3	FIX32	VD	4	Ra/W	CINH
C0863	23712	5CA0h	A	6	B16	VH	2	Ra	
C0864	23711	5C9Fh	A	3	FIX32	VD	4	Ra/Wa	
C0865	23710	5C9Eh	A	3	FIX32	VD	4	Ra/Wa	
C0866	23709	5C9Dh	A	11	FIX32	VD	4	Ra	
C0867	23708	5C9Ch	A	5	I32	VH	4	Ra	
C0868	23707	5C9Bh	A	11	FIX32	VD	4	Ra	
C0869	23706	5C9Ah	A	3	I32	VH	4	Ra	
C0870	23705	5C99h	A	2	FIX32	VD	4	Ra/W	CINH
C0871	23704	5C98h	E	1	FIX32	VD	4	Ra/W	CINH
C0876	23699	5C93h	E	1	FIX32	VD	4	Ra/W	CINH
C0878	23697	5C91h	A	4	FIX32	VD	4	Ra	
C0879	23696	5C90h	A	3	FIX32	VD	4	Ra/Wa	
C0885	23690	5C8Ah	E	1	FIX32	VD	4	Ra/W	CINH
C0886	23689	5C89h	E	1	FIX32	VD	4	Ra/W	CINH
C0889	23686	5C86h	A	2	FIX32	VD	4	Ra	
C0890	23685	5C85h	E	1	FIX32	VD	4	Ra/W	CINH
C0891	23684	5C84h	E	1	FIX32	VD	4	Ra/W	CINH
C0892	23683	5C83h	E	1	FIX32	VD	4	Ra/W	CINH
C0893	23682	5C82h	E	1	FIX32	VD	4	Ra/W	CINH
C0894	23681	5C81h	E	1	FIX32	VD	4	Ra/W	CINH
C0895	23680	5C80h	E	1	FIX32	VD	4	Ra/W	CINH
C0896	23679	5C7Fh	E	1	FIX32	VD	4	Ra/W	CINH
C0897	23678	5C7Eh	E	1	FIX32	VD	4	Ra/W	CINH
C0898	23677	5C7Dh	E	1	FIX32	VD	4	Ra/W	CINH
C0899	23676	5C7Ch	E	1	FIX32	VD	4	Ra/W	CINH
C0900	23675	5C7Bh	E	1	FIX32	VD	4	Ra/W	CINH
C0901	23674	5C7Ah	E	1	FIX32	VD	4	Ra/W	CINH
C0902	23673	5C79h	E	1	FIX32	VD	4	Ra/W	CINH
C0903	23672	5C78h	E	1	FIX32	VD	4	Ra/W	CINH
C0906	23669	5C75h	A	9	FIX32	VD	4	Ra	
C0907	23668	5C74h	A	4	FIX32	VD	4	Ra	
C0908	23667	5C73h	E	1	I32	VH	4	Ra	

Code	Index		Data					Access	
	dec	hex	DS	DA	DT	Format	DL	LCM-R/W	Condition
C0909	23666	5C72h	E	1	FIX32	VD	4	Ra/Wa	
C0940	23635	5C53h	E	1	FIX32	VD	4	Ra/Wa	
C0941	23634	5C52h	E	1	FIX32	VD	4	Ra/Wa	
C0942	23633	5C51h	E	1	FIX32	VD	4	Ra/W	CINH
C0943	23632	5C50h	E	1	FIX32	VD	4	Ra	
C0945	23630	5C4Eh	E	1	FIX32	VD	4	Ra/Wa	
C0946	23629	5C4Dh	E	1	FIX32	VD	4	Ra/Wa	
C0947	23628	5C4Ch	E	1	FIX32	VD	4	Ra/W	CINH
C0948	23627	5C4Bh	E	1	FIX32	VD	4	Ra	
C0950	23625	5C49h	E	1	FIX32	VD	4	Ra/Wa	
C0951	23624	5C48h	E	1	FIX32	VD	4	Ra/Wa	
C0952	23623	5C47h	E	1	FIX32	VD	4	Ra/W	CINH
C0953	23622	5C46h	E	1	FIX32	VD	4	Ra	
C0955	23620	5C44h	E	1	FIX32	VD	4	Ra/Wa	
C0956	23619	5C43h	E	1	FIX32	VD	4	Ra/Wa	
C0957	23618	5C42h	E	1	FIX32	VD	4	Ra/W	CINH
C0958	23617	5C41h	E	1	FIX32	VD	4	Ra	
C0960	23615	5C3Fh	E	1	FIX32	VD	4	Ra/Wa	
C0961	23614	5C3Eh	E	1	FIX32	VD	4	Ra/Wa	
C0962	23613	5C3Dh	E	1	FIX32	VD	4	Ra/Wa	
C0963	23612	5C3Ch	E	1	FIX32	VD	4	Ra/Wa	
C0964	23611	5C3Bh	E	1	FIX32	VD	4	Ra/Wa	
C0965	23610	5C3Ah	E	1	FIX32	VD	4	Ra/Wa	
C0966	23609	5C39h	E	1	FIX32	VD	4	Ra/Wa	
C0967	23608	5C38h	E	1	FIX32	VD	4	Ra/W	CINH
C0968	23607	5C37h	E	1	FIX32	VD	4	Ra	
C0990	23585	5C21h	E	1	FIX32	VD	4	Ra/W	CINH
C0991	23584	5C20h	E	1	FIX32	VD	4	Ra/W	CINH
C0992	23583	5C1Fh	E	1	FIX32	VD	4	Ra	
C0993	23582	5C1Eh	E	1	FIX32	VD	4	Ra	
C0995	23580	5C1Ch	E	1	FIX32	VD	4	Ra/Wa	
C0996	23579	5C1Bh	E	1	FIX32	VD	4	Ra/W	CINH
C0997	23578	5C1Ah	E	1	I32	VH	4	Ra	
C1000	23575	5C17h	E	1	FIX32	VD	4	Ra/Wa	
C1001	23574	5C16h	E	1	FIX32	VD	4	Ra/W	CINH
C1002	23573	5C15h	E	1	I32	VH	4	Ra	
C1010	23565	5C0Dh	E	1	FIX32	VD	4	Ra/Wa	
C1011	23564	5C0Ch	A	2	FIX32	VD	4	Ra/W	CINH
C1012	23563	5C0Bh	A	2	I32	VH	4	Ra	
C1020	23555	5C03h	E	1	FIX32	VD	4	Ra/Wa	
C1021	23554	5C02h	A	2	FIX32	VD	4	Ra/W	CINH
C1022	23553	5C01h	A	2	I32	VH	4	Ra	
C1025	23550	5BFEh	E	1	FIX32	VD	4	Ra/Wa	
C1026	23549	5BFDh	A	2	FIX32	VD	4	Ra/W	CINH
C1027	23548	5BFCh	A	2	I32	VH	4	Ra	
C1090	23485	5BBDh	E	1	I32	VH	4	Ra	
C1091	23484	5BBCh	E	1	FIX32	VD	4	Ra/Wa	

Code	Index		Data					Access	
	dec	hex	DS	DA	DT	Format	DL	LCM-R/W	Condition
C1092	23483	5BBBh	E	1	FIX32	VD	4	Ra/Wa	
C1093	23482	5BBAh	E	1	FIX32	VD	4	Ra/Wa	
C1094	23481	5BB9h	E	1	FIX32	VD	4	Ra/Wa	
C1095	23480	5BB8h	E	1	I32	VH	4	Ra/Wa	
C1096	23479	5BB7h	E	1	FIX32	VD	4	Ra/W	CINH
C1097	23478	5BB6h	A	3	FIX32	VD	4	Ra/W	CINH
C1098	23477	5BB5h	E	1	FIX32	VD	4	Ra	
C1099	23476	5BB4h	A	3	FIX32	VD	4	Ra	
C1100	23475	5BB3h	E	1	FIX32	VD	4	Ra/Wa	
C1101	23474	5BB2h	A	2	FIX32	VD	4	Ra/W	CINH
C1102	23473	5BB1h	A	3	FIX32	VD	4	Ra/W	CINH
C1103	23472	5BB0h	A	2	FIX32	VD	4	Ra	
C1104	23471	5BAFh	A	3	FIX32	VD	4	Ra	
C1105	23470	5BAEh	E	1	FIX32	VD	4	Ra/Wa	
C1106	23469	5BADh	A	2	FIX32	VD	4	Ra/W	CINH
C1107	23468	5BACh	A	3	FIX32	VD	4	Ra/W	CINH
C1108	23467	5BABh	A	2	FIX32	VD	4	Ra	
C1109	23466	5BAAh	A	3	FIX32	VD	4	Ra	
C1110	23465	5BA9h	E	1	FIX32	VD	4	Ra/Wa	
C1111	23464	5BA8h	A	2	FIX32	VD	4	Ra/W	CINH
C1112	23463	5BA7h	A	3	FIX32	VD	4	Ra/W	CINH
C1113	23462	5BA6h	A	2	FIX32	VD	4	Ra	
C1114	23461	5BA5h	A	3	FIX32	VD	4	Ra	
C1120	23455	5B9Fh	E	1	FIX32	VD	4	Ra/Wa	
C1121	23454	5B9Eh	A	2	FIX32	VD	4	Ra/Wa	
C1122	23453	5B9Dh	E	1	FIX32	VD	4	Ra/Wa	
C1123	23452	5B9Ch	A	2	FIX32	VD	4	Ra/Wa	
C1124	23451	5B9Bh	E	1	FIX32	VD	4	Ra/W	CINH
C1125	23450	5B9Ah	E	1	FIX32	VD	4	Ra/W	CINH
C1126	23449	5B99h	E	1	FIX32	VD	4	Ra/W	CINH
C1127	23448	5B98h	E	1	I32	VH	4	Ra	
C1128	23447	5B97h	E	1	I32	VH	4	Ra	
C1129	23446	5B96h	E	1	I32	VH	4	Ra	
C1130	23445	5B95h	A	2	FIX32	VD	4	Ra/W	CINH
C1131	23444	5B94h	E	1	FIX32	VD	4	Ra/W	CINH
C1132	23443	5B93h	E	1	FIX32	VD	4	Ra/W	CINH
C1135	23440	5B90h	A	2	FIX32	VD	4	Ra	
C1136	23439	5B8Fh	E	1	FIX32	VD	4	Ra	
C1137	23438	5B8Eh	E	1	I32	VH	4	Ra	
C1160	23415	5B77h	A	2	FIX32	VD	4	Ra/W	CINH
C1161	23414	5B76h	E	1	FIX32	VD	4	Ra/W	CINH
C1162	23413	5B75h	A	2	FIX32	VD	4	Ra	
C1163	23412	5B74h	E	1	FIX32	VD	4	Ra	
C1165	23410	5B72h	A	2	FIX32	VD	4	Ra/W	CINH
C1166	23409	5B71h	E	1	FIX32	VD	4	Ra/W	CINH
C1167	23408	5B70h	A	2	FIX32	VD	4	Ra	
C1168	23407	5B6Fh	E	1	FIX32	VD	4	Ra	

Code	Index		Data					Access	
	dec	hex	DS	DA	DT	Format	DL	LCM-R/W	Condition
C1180	23395	5B63h	E	1	FIX32	VD	4	Ra/W	CINH
C1181	23394	5B62h	E	1	FIX32	VD	4	Ra	
C1182	23393	5B61h	E	1	FIX32	VD	4	Ra/Wa	
C1183	23392	5B60h	E	1	FIX32	VD	4	Ra/Wa	
C1184	23391	5B5Fh	E	1	FIX32	VD	4	Ra/Wa	
C1185	23390	5B5Eh	E	1	FIX32	VD	4	Ra/Wa	
C1186	23389	5B5Dh	E	1	FIX32	VD	4	Ra/Wa	
C1187	23388	5B5Ch	E	1	FIX32	VD	4	Ra/Wa	
C1188	23387	5B5Bh	E	1	FIX32	VD	4	Ra/Wa	
C1190	23385	5B59h	E	1	FIX32	VD	4	Ra/Wa	
C1191	23384	5B58h	A	2	FIX32	VD	4	Ra/Wa	
C1192	23383	5B57h	A	2	FIX32	VD	4	Ra/Wa	
C1195	23380	5B54h	E	1	FIX32	VD	4	Ra/W	CINH
C1196	23379	5B53h	E	1	I32	VH	4	Ra	
C1197	23378	5B52h	E	1	I32	VH	4	Ra	
C1202	23373	5B4Dh	E	1	FIX32	VD	4	Ra/W	CINH
C1203	23372	5B4Ch	E	1	FIX32	VD	4	Ra/W	CINH
C1204	23371	5B4Bh	E	1	FIX32	VD	4	Ra/W	CINH
C1205	23370	5B4Ah	E	1	FIX32	VD	4	Ra	
C1206	23369	5B49h	E	1	FIX32	VD	4	Ra/W	CINH
C1207	23368	5B48h	A	2	FIX32	VD	4	Ra/W	CINH
C1208	23367	5B47h	E	1	FIX32	VD	4	Ra/W	CINH
C1209	23366	5B46h	E	1	FIX32	VD	4	Ra/Wa	
C1210	23365	5B45h	E	1	FIX32	VD	4	Ra/Wa	
C1211	23364	5B44h	E	1	FIX32	VD	4	Ra/Wa	
C1212	23363	5B43h	E	1	FIX32	VD	4	Ra	
C1213	23362	5B42h	E	1	FIX32	VD	4	Ra/Wa	
C1214	23361	5B41h	E	1	FIX32	VD	4	Ra/Wa	
C1215	23360	5B40h	A	4	FIX32	VD	4	Ra/Wa	
C1216	23359	5B3Fh	E	1	FIX32	VD	4	Ra/Wa	
C1218	23357	5B3Dh	A	2	FIX32	VD	4	Ra/Wa	
C1220	23355	5B3Bh	A	15	FIX32	VD	4	Ra	
C1221	23354	5B3Ah	A	15	I32	VH	4	Ra	
C1223	23352	5B38h	E	1	FIX32	VD	4	Ra/W	CINH
C1224	23351	5B37h	E	1	FIX32	VD	4	Ra/W	CINH
C1225	23350	5B36h	E	1	FIX32	VD	4	Ra/Wa	
C1227	23348	5B34h	E	1	FIX32	VD	4	Ra/Wa	
C1240	23335	5B27h	E	1	FIX32	VD	4	Ra/Wa	
C1241	23334	5B26h	E	1	FIX32	VD	4	Ra/Wa	
C1242	23333	5B25h	E	1	FIX32	VD	4	Ra/Wa	
C1243	23332	5B24h	E	1	FIX32	VD	4	Ra/Wa	
C1245	23330	5B22h	A	3	FIX32	VD	4	Ra	
C1250	23325	5B1Dh	E	1	FIX32	VD	4	Ra/Wa	
C1251	23324	5B1Ch	E	1	FIX32	VD	4	Ra/Wa	
C1252	23323	5B1Bh	E	1	FIX32	VD	4	Ra/Wa	
C1253	23322	5B1Ah	E	1	FIX32	VD	4	Ra/Wa	
C1255	23320	5B18h	A	3	FIX32	VD	4	Ra	

Code	Index		Data					Access	
	dec	hex	DS	DA	DT	Format	DL	LCM-R/W	Condition
C1256	23319	5B17h	E	1	FIX32	VD	4	Ra/Wa	
C1257	23318	5B16h	E	1	FIX32	VD	4	Ra/Wa	
C1260	23315	5B13h	E	1	FIX32	VD	4	Ra/Wa	
C1261	23314	5B12h	A	16	FIX32	VD	4	Ra/Wa	
C1280	23295	5AFFh	E	1	B16	VH	2	Ra/Wa	
C1283	23292	5AFCh	E	1	FIX32	VD	4	Ra	
C1284	23291	5AFBh	E	1	FIX32	VD	4	Ra	
C1285	23290	5AFAh	A	4	FIX32	VD	4	Ra/Wa	
C1286	23289	5AF9h	A	2	FIX32	VD	4	Ra/Wa	
C1287	23288	5AF8h	E	1	FIX32	VD	4	Ra/Wa	
C1288	23287	5AF7h	E	1	FIX32	VD	4	Ra/Wa	
C1289	23286	5AF6h	A	2	FIX32	VD	4	Ra/Wa	
C1290	23285	5AF5h	E	1	FIX32	VD	4	Ra/Wa	
C1291	23284	5AF4h	A	3	FIX32	VD	4	Ra/Wa	
C1298	23277	5AEDh	E	1	FIX32	VD	4	Ra	
C1299	23276	5AECh	A	32	FIX32	VD	4	Ra	
C1301	23274	5AEAh	A	60	FIX32	VD	4	Ra/Wa	
C1302	23273	5AE9h	A	30	FIX32	VD	4	Ra/Wa	
C1303	23272	5AE8h	A	30	FIX32	VD	4	Ra/Wa	
C1304	23271	5AE7h	A	30	FIX32	VD	4	Ra/Wa	
C1305	23270	5AE6h	A	30	FIX32	VD	4	Ra/Wa	
C1311	23264	5AE0h	A	32	FIX32	VD	4	Ra/Wa	
C1312	23263	5ADFh	A	32	FIX32	VD	4	Ra/Wa	
C1313	23262	5ADEh	A	32	FIX32	VD	4	Ra/Wa	
C1314	23261	5ADDh	A	32	FIX32	VD	4	Ra/Wa	
C1315	23260	5ADCh	A	32	FIX32	VD	4	Ra/Wa	
C1316	23259	5ADBh	A	32	FIX32	VD	4	Ra/Wa	
C1318	23257	5AD9h	A	32	FIX32	VD	4	Ra/Wa	
C1319	23256	5AD8h	A	32	FIX32	VD	4	Ra/Wa	
C1320	23255	5AD7h	A	32	FIX32	VD	4	Ra/Wa	
C1321	23254	5AD6h	A	32	FIX32	VD	4	Ra/Wa	
C1322	23253	5AD5h	A	32	FIX32	VD	4	Ra/Wa	
C1323	23252	5AD4h	A	32	FIX32	VD	4	Ra/Wa	
C1324	23251	5AD3h	A	32	FIX32	VD	4	Ra/Wa	
C1325	23250	5AD2h	A	32	FIX32	VD	4	Ra/Wa	
C1326	23249	5AD1h	A	32	FIX32	VD	4	Ra/Wa	
C1327	23248	5AD0h	A	32	FIX32	VD	4	Ra/Wa	
C1328	23247	5ACFh	A	32	FIX32	VD	4	Ra/Wa	
C1329	23246	5ACEh	A	32	FIX32	VD	4	Ra/Wa	
C1330	23245	5ACDh	A	32	FIX32	VD	4	Ra/Wa	
C1331	23244	5ACCh	A	32	FIX32	VD	4	Ra/Wa	
C1333	23242	5ACAh	A	32	FIX32	VD	4	Ra/Wa	
C1334	23241	5AC9h	A	32	FIX32	VD	4	Ra/Wa	
C1335	23240	5AC8h	A	32	FIX32	VD	4	Ra/Wa	
C1336	23239	5AC7h	A	32	FIX32	VD	4	Ra/Wa	
C1349	23226	5ABAh	A	32	FIX32	VD	4	Ra/Wa	
C1350	23225	5AB9h	A	10	FIX32	VD	4	Ra/W	CINH

Code	Index		Data					Access	
	dec	hex	DS	DA	DT	Format	DL	LCM-R/W	Condition
C1351	23224	5AB8h	A	10	I32	VH	4	Ra	
C1352	23223	5AB7h	A	4	FIX32	VD	4	Ra/W	CINH
C1353	23222	5AB6h	A	4	I32	VH	4	Ra	
C1354	23221	5AB5h	A	4	FIX32	VD	4	Ra/W	CINH
C1355	23220	5AB4h	A	4	I32	VH	4	Ra	
C1356	23219	5AB3h	A	4	FIX32	VD	4	Ra/W	CINH
C1357	23218	5AB2h	A	4	FIX32	VD	4	Ra	
C1358	23217	5AB1h	A	4	FIX32	VD	4	Ra/Wa	
C1359	23216	5AB0h	A	4	FIX32	VD	4	Ra	
C1360	23215	5AAFh	A	22	FIX32	VD	4	Ra/W	CINH
C1361	23214	5AAEh	A	22	FIX32	VD	4	Ra	
C1362	23213	5AADh	A	8	FIX32	VD	4	Ra/W	CINH
C1363	23212	5AACh	A	8	FIX32	VD	4	Ra	
C1364	23211	5AABh	A	3	FIX32	VD	4	Ra/W	CINH
C1365	23210	5AAAh	A	3	I32	VH	4	Ra	
C1370	23205	5AA5h	A	32	FIX32	VD	4	Ra/W	CINH
C1371	23204	5AA4h	A	2	B16	VH	2	Ra	
C1372	23203	5AA3h	A	2	B16	VH	2	Ra	
C1380	23195	5A9Bh	A	104	FIX32	VD	4	Ra	
C1381	23194	5A9Ah	A	104	I32	VH	4	Ra	
C1382	23193	5A99h	A	34	FIX32	VD	4	Ra	
C1383	23192	5A98h	A	34	I32	VH	4	Ra	
C1384	23191	5A97h	A	34	FIX32	VD	4	Ra	
C1385	23190	5A96h	A	34	I32	VH	4	Ra	
C1386	23189	5A95h	A	34	FIX32	VD	4	Ra	
C1387	23188	5A94h	A	34	FIX32	VD	4	Ra	
C1400	23175	5A87h	A	4	FIX32	VD	4	Ra/W	CINH
C1401	23174	5A86h	E	1	FIX32	VD	4	Ra/W	CINH
C1402	23173	5A85h	A	4	FIX32	VD	4	Ra	
C1403	23172	5A84h	E	1	FIX32	VD	4	Ra	
C1404	23171	5A83h	E	1	I32	VH	4	Ra	
C1405	23170	5A82h	E	1	FIX32	VD	4	Ra/W	CINH
C1406	23169	5A81h	E	1	FIX32	VD	4	Ra	
C1500	23075	5A23h	E	1	I32	VH	4	Ra	
C1501	23074	5A22h	E	1	FIX32	VD	4	Ra/Wa	
C1502	23073	5A21h	E	1	FIX32	VD	4	Ra/Wa	
C1503	23072	5A20h	E	1	FIX32	VD	4	Ra/Wa	
C1504	23071	5A1Fh	E	1	FIX32	VD	4	Ra/Wa	
C1505	23070	5A1Eh	E	1	I32	VH	4	Ra/Wa	
C1506	23069	5A1Dh	E	1	FIX32	VD	4	Ra/W	CINH
C1507	23068	5A1Ch	A	3	FIX32	VD	4	Ra/W	CINH
C1508	23067	5A1Bh	E	1	FIX32	VD	4	Ra	
C1509	23066	5A1Ah	A	3	FIX32	VD	4	Ra	
C1510	23065	5A19h	E	1	I32	VH	4	Ra	
C1511	23064	5A18h	E	1	FIX32	VD	4	Ra/Wa	
C1512	23063	5A17h	E	1	FIX32	VD	4	Ra/Wa	
C1513	23062	5A16h	E	1	FIX32	VD	4	Ra/Wa	

Code	Index		Data					Access	
	dec	hex	DS	DA	DT	Format	DL	LCM-R/W	Condition
C1514	23061	5A15h	E	1	FIX32	VD	4	Ra/Wa	
C1515	23060	5A14h	E	1	I32	VH	4	Ra/Wa	
C1516	23059	5A13h	E	1	FIX32	VD	4	Ra/W	CINH
C1517	23058	5A12h	A	3	FIX32	VD	4	Ra/W	CINH
C1518	23057	5A11h	E	1	FIX32	VD	4	Ra	
C1519	23056	5A10h	A	3	FIX32	VD	4	Ra	
C1520	23055	5A0Fh	E	1	I32	VH	4	Ra	
C1521	23054	5A0Eh	E	1	FIX32	VD	4	Ra/Wa	
C1522	23053	5A0Dh	E	1	FIX32	VD	4	Ra/Wa	
C1523	23052	5A0Ch	E	1	FIX32	VD	4	Ra/Wa	
C1524	23051	5A0Bh	E	1	FIX32	VD	4	Ra/Wa	
C1525	23050	5A0Ah	E	1	I32	VH	4	Ra/Wa	
C1526	23049	5A09h	E	1	FIX32	VD	4	Ra/W	CINH
C1527	23048	5A08h	A	3	FIX32	VD	4	Ra/W	CINH
C1528	23047	5A07h	E	1	FIX32	VD	4	Ra	
C1529	23046	5A06h	A	3	FIX32	VD	4	Ra	
C1530	23045	5A05h	E	1	I32	VH	4	Ra	
C1531	23044	5A04h	E	1	FIX32	VD	4	Ra/Wa	
C1532	23043	5A03h	E	1	FIX32	VD	4	Ra/Wa	
C1533	23042	5A02h	E	1	FIX32	VD	4	Ra/Wa	
C1534	23041	5A01h	E	1	FIX32	VD	4	Ra/Wa	
C1535	23040	5A00h	E	1	I32	VH	4	Ra/Wa	
C1536	23039	59FFh	E	1	FIX32	VD	4	Ra/W	CINH
C1537	23038	59FEh	A	3	FIX32	VD	4	Ra/W	CINH
C1538	23037	59FDh	E	1	FIX32	VD	4	Ra	
C1539	23036	59FCh	A	3	FIX32	VD	4	Ra	
C1540	23035	59FBh	E	1	I32	VH	4	Ra	
C1541	23034	59FAh	E	1	FIX32	VD	4	Ra/Wa	
C1542	23033	59F9h	E	1	FIX32	VD	4	Ra/Wa	
C1543	23032	59F8h	E	1	FIX32	VD	4	Ra/Wa	
C1544	23031	59F7h	E	1	FIX32	VD	4	Ra/Wa	
C1545	23030	59F6h	E	1	I32	VH	4	Ra/Wa	
C1546	23029	59F5h	E	1	FIX32	VD	4	Ra/W	CINH
C1547	23028	59F4h	A	3	FIX32	VD	4	Ra/W	CINH
C1548	23027	59F3h	E	1	FIX32	VD	4	Ra	
C1549	23026	59F2h	A	3	FIX32	VD	4	Ra	
C1550	23025	59F1h	E	1	FIX32	VD	4	Ra/Wa	
C1551	23024	59F0h	A	2	FIX32	VD	4	Ra/W	CINH
C1552	23023	59EFh	A	2	I32	VH	4	Ra	
C1555	23020	59ECh	E	1	FIX32	VD	4	Ra/Wa	
C1556	23019	59EBh	A	2	FIX32	VD	4	Ra/W	CINH
C1557	23018	59EAh	A	2	I32	VH	4	Ra	
C1560	23015	59E7h	E	1	FIX32	VD	4	Ra/Wa	
C1561	23014	59E6h	A	2	FIX32	VD	4	Ra/W	CINH
C1562	23013	59E5h	A	2	I32	VH	4	Ra	
C1570	23005	59DDh	A	16	FIX32	VD	4	Ra/W	CINH
C1571	23004	59DCh	E	1	B16	VH	2	Ra	

Code	Index		Data					Access	
	dec	hex	DS	DA	DT	Format	DL	LCM-R/W	Condition
C1573	23002	59DAh	A	16	FIX32	VD	4	Ra/W	CINH
C1574	23001	59D9h	E	1	B16	VH	2	Ra	
C1576	22999	59D7h	A	16	FIX32	VD	4	Ra/W	CINH
C1577	22998	59D6h	E	1	B16	VH	2	Ra	
C1580	22995	59D3h	E	1	FIX32	VD	4	Ra/W	CINH
C1581	22994	59D2h	E	1	FIX32	VD	4	Ra	
C1582	22993	59D1h	E	1	FIX32	VD	4	Ra/W	CINH
C1583	22992	59D0h	E	1	FIX32	VD	4	Ra	
C1590	22985	59C9h	E	1	FIX32	VD	4	Ra/Wa	
C1591	22984	59C8h	E	1	FIX32	VD	4	Ra/Wa	
C1593	22982	59C6h	E	1	FIX32	VD	4	Ra/W	CINH
C1594	22981	59C5h	E	1	FIX32	VD	4	Ra	
C1595	22980	59C4h	E	1	FIX32	VD	4	Ra/Wa	
C1596	22979	59C3h	E	1	FIX32	VD	4	Ra/Wa	
C1598	22977	59C1h	E	1	FIX32	VD	4	Ra/W	CINH
C1599	22976	59C0h	E	1	FIX32	VD	4	Ra	
C1600	22975	59BFh	E	1	FIX32	VD	4	Ra/Wa	
C1601	22974	59BEh	E	1	FIX32	VD	4	Ra/Wa	
C1603	22972	59BCh	E	1	FIX32	VD	4	Ra/W	CINH
C1604	22971	59BBh	E	1	FIX32	VD	4	Ra	
C1610	22965	59B5h	E	1	FIX32	VD	4	Ra/Wa	
C1611	22964	59B4h	E	1	FIX32	VD	4	Ra/W	CINH
C1612	22963	59B3h	E	1	I32	VH	4	Ra	
C1615	22960	59B0h	E	1	FIX32	VD	4	Ra/Wa	
C1616	22959	59AFh	E	1	FIX32	VD	4	Ra/W	CINH
C1617	22958	59AEh	E	1	I32	VH	4	Ra	
C1640	22935	5997h	E	1	FIX32	VD	4	Ra/W	CINH
C1641	22934	5996h	A	16	FIX32	VD	4	Ra/Wa	
C1642	22933	5995h	E	1	FIX32	VD	4	Ra/W	CINH
C1643	22932	5994h	E	1	FIX32	VD	4	Ra	
C1644	22931	5993h	E	1	I32	VH	4	Ra	
C1645	22930	5992h	E	1	FIX32	VD	4	Ra/Wa	
C1650	22925	598Dh	E	1	FIX32	VD	4	Ra/W	CINH
C1651	22924	598Ch	A	16	FIX32	VD	4	Ra/Wa	
C1652	22923	598Bh	E	1	FIX32	VD	4	Ra/W	CINH
C1653	22922	598Ah	E	1	FIX32	VD	4	Ra	
C1654	22921	5989h	E	1	I32	VH	4	Ra	
C1655	22920	5988h	E	1	FIX32	VD	4	Ra/Wa	
C1657	22918	5986h	A	4	FIX32	VD	4	Ra/Wa	
C1658	22917	5985h	E	1	FIX32	VD	4	Ra/Wa	
C1659	22916	5984h	E	1	FIX32	VD	4	Ra/Wa	
C1660	22915	5983h	E	1	FIX32	VD	4	Ra	
C1661	22914	5982h	E	1	FIX32	VD	4	Ra/W	CINH
C1662	22913	5981h	A	8	FIX32	VD	4	Ra/W	CINH
C1663	22912	5980h	E	1	FIX32	VD	4	Ra	
C1664	22911	597Fh	A	8	I32	VH	4	Ra	
C1665	22910	597Eh	E	1	FIX32	VD	4	Ra	

Code	Index		Data					Access	
	dec	hex	DS	DA	DT	Format	DL	LCM-R/W	Condition
C1666	22909	597Dh	E	1	FIX32	VD	4	Ra/W	CINH
C1667	22908	597Ch	A	8	FIX32	VD	4	Ra/W	CINH
C1668	22907	597Bh	E	1	FIX32	VD	4	Ra	
C1669	22906	597Ah	A	8	I32	VH	4	Ra	
C1670	22905	5979h	E	1	FIX32	VD	4	Ra/Wa	
C1671	22904	5978h	E	1	I32	VH	4	Ra/Wa	
C1672	22903	5977h	E	1	I32	VH	4	Ra/Wa	
C1673	22902	5976h	A	2	FIX32	VD	4	Ra/W	CINH
C1674	22901	5975h	A	2	I32	VH	4	Ra	
C1675	22900	5974h	E	1	FIX32	VD	4	Ra/Wa	
C1676	22899	5973h	E	1	I32	VH	4	Ra/Wa	
C1677	22898	5972h	E	1	I32	VH	4	Ra/Wa	
C1678	22897	5971h	A	2	FIX32	VD	4	Ra/W	CINH
C1679	22896	5970h	A	2	I32	VH	4	Ra	
C1680	22895	596Fh	E	1	FIX32	VD	4	Ra/Wa	
C1681	22894	596Eh	E	1	I32	VH	4	Ra/Wa	
C1682	22893	596Dh	E	1	I32	VH	4	Ra/Wa	
C1683	22892	596Ch	A	2	FIX32	VD	4	Ra/W	CINH
C1684	22891	596Bh	A	2	I32	VH	4	Ra	
C1690	22885	5965h	A	10	FIX32	VD	4	Ra/W	CINH
C1691	22884	5964h	A	10	FIX32	VD	4	Ra	
C1692	22883	5963h	A	10	FIX32	VD	4	Ra	
C1693	22882	5962h	A	10	B16	VH	2	Ra	
C1695	22880	5960h	A	10	FIX32	VD	4	Ra/W	CINH
C1696	22879	595Fh	A	10	I32	VH	4	Ra	
C1700	22875	595Bh	A	2	I32	VH	4	Ra	
C1701	22874	595Ah	E	1	FIX32	VD	4	Ra/Wa	
C1702	22873	5959h	E	1	FIX32	VD	4	Ra/Wa	
C1703	22872	5958h	E	1	FIX32	VD	4	Ra/Wa	
C1704	22871	5957h	E	1	FIX32	VD	4	Ra/Wa	
C1705	22870	5956h	E	1	I32	VH	4	Ra/Wa	
C1706	22869	5955h	E	1	FIX32	VD	4	Ra/Wa	
C1707	22868	5954h	E	1	FIX32	VD	4	Ra/Wa	
C1708	22867	5953h	A	8	FIX32	VD	4	Ra/W	CINH
C1709	22866	5952h	A	8	FIX32	VD	4	Ra	
C1710	22865	5951h	A	2	I32	VH	4	Ra	
C1711	22864	5950h	E	1	FIX32	VD	4	Ra/Wa	
C1712	22863	594Fh	E	1	FIX32	VD	4	Ra/Wa	
C1713	22862	594Eh	E	1	FIX32	VD	4	Ra/Wa	
C1714	22861	594Dh	E	1	FIX32	VD	4	Ra/Wa	
C1715	22860	594Ch	E	1	I32	VH	4	Ra/Wa	
C1716	22859	594Bh	E	1	FIX32	VD	4	Ra/Wa	
C1717	22858	594Ah	E	1	FIX32	VD	4	Ra/Wa	
C1718	22857	5949h	A	8	FIX32	VD	4	Ra/W	CINH
C1719	22856	5948h	A	8	FIX32	VD	4	Ra	
C1720	22855	5947h	A	2	I32	VH	4	Ra	
C1721	22854	5946h	E	1	FIX32	VD	4	Ra/Wa	

Code	Index		Data					Access	
	dec	hex	DS	DA	DT	Format	DL	LCM-R/W	Condition
C1722	22853	5945h	E	1	FIX32	VD	4	Ra/Wa	
C1723	22852	5944h	E	1	FIX32	VD	4	Ra/Wa	
C1724	22851	5943h	E	1	FIX32	VD	4	Ra/Wa	
C1725	22850	5942h	E	1	I32	VH	4	Ra/Wa	
C1726	22849	5941h	E	1	FIX32	VD	4	Ra/Wa	
C1727	22848	5940h	E	1	FIX32	VD	4	Ra/Wa	
C1728	22847	593Fh	A	8	FIX32	VD	4	Ra/W	CINH
C1729	22846	593Eh	A	8	FIX32	VD	4	Ra	

9 Troubleshooting and fault elimination

Contents

9.1 Display of operating data, diagnostics 9.1-1
9.2 Troubleshooting 9.2-1
9.2.1 Status display via controller LEDs 9.2-1
9.2.2 Fault analysis with the history buffer 9.2-1
9.2.3 Fault analysis via LECOM status words (C0150/C0155) 9.2-3
9.3 System error messages 9.3-1
9.3.1 General error messages 9.3-1
9.3.2 Resetting system error messages 9.3-8

9.1 Display of operating data, diagnostics

The dialog box displays important operating parameters and supports you in diagnosing the drive controller.

► Open the **Diagnostics** dialog box in the parameter menu.

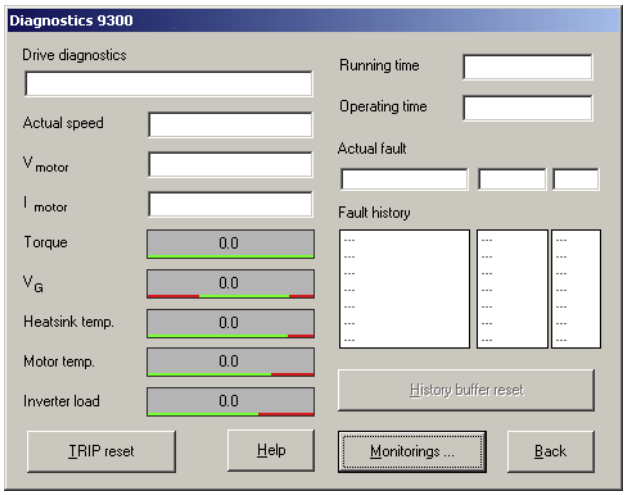

9300std230

Fig. 9.1-1 ”Diagnostics” dialog box

► You can recognise immediately that a fault has occurred from the display elements or status information.

► An error can be analysed with
- the history buffer in Global Drive Control (GDC) (📖 9.2-1) or
- the XT keypad
- and with the ”General error messages” table in the ”System error messages” chapter.

► The ”General error messages” table provides tips on how to eliminate an error.

9.2 Troubleshooting

Detecting breakdowns

A breakdown can be detected quickly via the LEDs at the controller or via the status information at the keypad.

Analysing errors

Analyse the error using the history buffer. The list of fault messages gives you advice how to remove the fault. (📖 9.3-1)

9.2.1 Status display via controller LEDs

During operation the operating status of the controller is shown by 2 LEDs.

LED		Operating status
Red ①	**Green** ②	
Off	On	Controller enabled
On	On	Mains switched on and automatic start inhibited
Off	Blinking slowly	Controller inhibited
Blinking quickly	Off	Undervoltage or overvoltage
Blinking slowly	Off	Fault active

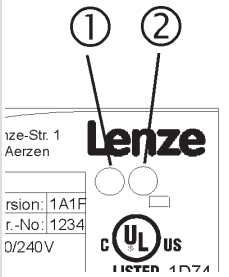

9.2.2 Fault analysis with the history buffer

The history buffer can be used to trace faults. The fault messages are stored in the 8 memory locations in the order of their occurrence.

► Open the **Diagnostics** dialog box in the parameter menu.

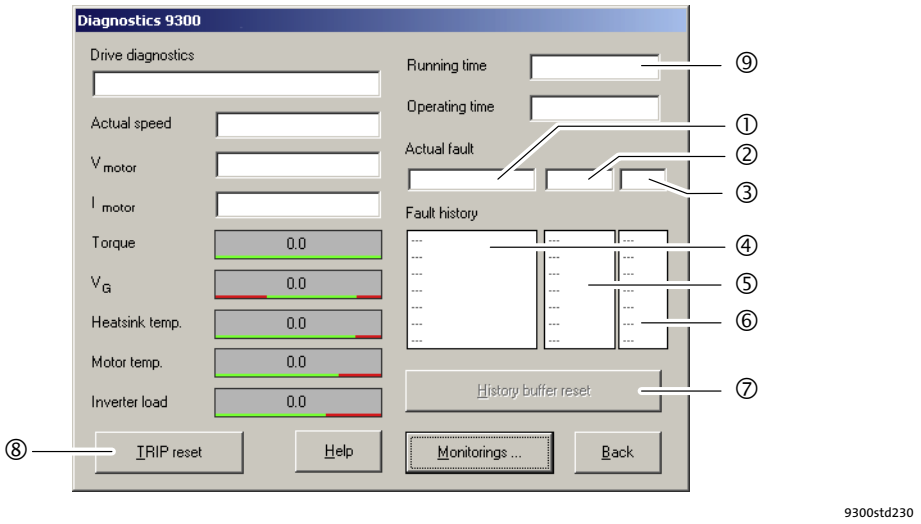

Fig. 9.2-1 ”Diagnostics” dialog box

Field	History buffer location	Entry	Note
① ② ③	1	Active fault	If the fault is no longer pending or has been acknowledged:
	2	Last fault	

Field			History buffer location	Entry	Note
④	⑤	⑥	3	Next to last fault	● The content of memory units 1 ... 7 is shifted "upwards" by one memory unit. ● The content of memory unit 8 is removed from the history buffer and can no longer be retrieved. ● Memory unit 1 is deleted (= no active fault).
			4	Third to last fault	
			5	Fourth to last fault	
			6	Fifth to last fault	
			7	Sixth to last fault	
			8	Seventh to last fault	

Explanations	
①, ④	**Fault indication and fault response (C0168)** ● The entry is effected as LECOM error number. ● If several faults with a different response occur at the same time: – Only the fault the response of which has the highest priority is entered (1. TRIP, 2. message, 3. warning). ● If faults with the same response occur (e. g. 2 messages) at the same time: – Only the fault that was triggered first is entered. – The OH7 and OH3 warnings are exceptions. If an OH7 warning is pending and the OH3 motor temperature threshold is reached, the OH7 warning is overwritten by the OH3 warning. If the motor temperature decreases again, the OH7 warning reappears.
②, ⑤	**Time of the fault (C0169)** ● Reference time is the content of the power-on time meter ⑨. ● If a fault is immediately followed by another fault for several times, only the time of the last occurrence is stored.
③, ⑥	**Frequency of occurrence of the fault (C0170)** ● The time of the last occurrence is stored.
⑦	Click on **Fault memory reset** to clear the history buffer. The history buffer can only be cleared if no fault is active.
⑧	Click on **TRIP reset** to reset the fault.

9.2.3 Fault analysis via LECOM status words (C0150/C0155)

The LECOM status words (C0150/C0155) are coded as follows:

Code		Possible settings			IMPORTANT
No.	Designation	Lenze/ {Appl.}	Selection		
C0150	Status word	0			Device status word for networking via automation interface (AIF) Read only
			0 {1} 65535		Controller evaluates information as 16 bits (binary-coded)
			Bit 0	Not assigned	
			Bit 1	Pulse inhibit (IMP)	
			Bit2	Not assigned	
			Bit3	Not assigned	
			Bit4	Not assigned	
			Bit5	Not assigned	
			Bit 6	n = 0	
			Bit 7	Controller inhibit (CINH)	
			Bit 8	Device status bit 1	
			Bit 9	Device status bit 2	
			Bit10	Device status bit 3	
			Bit11	Device status bit 4	
			Bit12	Warning	
			Bit13	Message	
			Bit14	Not assigned	
			Bit15	Not assigned	
C0155	Status word 2	0			Status word 2 (advanced status word) Display only
			0 {1} 65535		Controller interprets information as 16 bit (binary coded)
			Bit 0	Active fault	
			Bit 1	M_{max} reached	
			Bit 2	I_{max} reached	
			Bit 3	Pulse inhibit(IMP)	
			Bit 4	Ready for operation (RDY)	
			Bit 5	Controller inhibit (CINH)	
			Bit 6	TRIP active	
			Bit 7	Initialisation	
			Bit 8	Motor direction of rotation (Cw/CCw)	
			Bit 9	Not assigned	
			Bit 10	Not assigned	
			Bit 11	Not assigned	
			Bit 12	Not assigned	
			Bit 13	Not assigned	
			Bit 14	Not assigned	
			Bit 15	Not assigned	

9.3 System error messages

9.3.1 General error messages

Note!
In the case of a query via system bus (CAN), the fault messages are represented as numbers (see first column of the table).

Fault message		Description	Cause	Remedy
No.	Display			
---	---	No fault	-	-
0011	OC1	Short circuit of motor cable	Short circuit	• Search for cause of short circuit. • Check motor cable.
			Excessive capacitive charging current in the motor cable.	Use motor cable which is shorter or of lower capacitance.
0012	OC2	Motor cable earth fault	One of the motor phases has earth contact.	• Search for cause of short circuit. • Check motor cable.
0015	OC5	I x t overload	• Frequent and too long acceleration with overcurrent • Continuous overload with I_{motor} > 1.05 x $I_{rx.}$	Check drive dimensioning.
0016	OC6	I^2xt overload	• Frequent and too long acceleration processes with motor overcurrent. • Permanent motor overload with I_{motor}>I_{rmotor}	Check drive dimensioning.
x018	OC8	I^2xt overload advance warning	• Frequent and too long acceleration processes with motor overcurrent. • Permanent motor overload with I_{motor}>I_{rmotor}	Check drive dimensioning.
1020	OU	Overvoltage in DC bus	Braking energy is too high. (DC-bus voltage is higher than set in C0173.)	• Use braking unit or regenerative module. • Check dimensioning of the brake resistance.
1030	LU	Undervoltage in the DC bus	DC bus voltage is lower than specified in C0173.	• Check mains voltage • Check supply cable
x032	LP1	Motor phase failure	A current-carrying motor phase has failed.	• Check motor. • Check motor cable. • Switch off monitoring (C0597 = 3).
			The current limit value is set too low.	• Set higher current limit value via C0599.
0050	OH	Heatsink temperature > +90 °C	Ambient temperature T_u > +40 °C or > +50 °C	• Allow module to cool and ensure better ventilation. • Check ambient temperature in the control cabinet.
			Heatsink is very dirty.	Clean heatsink.
			Wrong mounting position	Change mounting position.

Fault message		Description	Cause	Remedy
No.	Display			
x053	OH3	Motor temperature > +150 °C threshold (temperature detection via resolver or incremental value encoder)	Motor is thermally overloaded due to: ● Impermissible continuous current ● Frequent or too long acceleration processes	● Check drive dimensioning. ● Switch off monitoring (C0583 = 3).
			No PTC/temperature contact connected.	Correct wiring.
x054	OH4	Heatsink temperature > C0122	Ambient temperature T_u > +40 °C or > +50 °C	● Allow module to cool and ensure better ventilation. ● Check ambient temperature in the control cabinet. ● Switch off monitoring (C0582 = 3).
			Heatsink is very dirty.	Clean heatsink
			Wrong mounting position	Change mounting position.
			The value specified under C0122 is set too low.	Enter a higher value under C0122.
x057	OH7	Motor temperature > C0121 (temperature detection via resolver or incremental value encoder)	Motor is thermally overloaded due to: ● Impermissible continuous current ● Frequent or too long acceleration processes	● Check drive dimensioning. ● Switch off monitoring (C0584 = 3).
			No PTC/temperature contact connected.	Correct wiring.
			The value specified under C0121 is set too low.	Enter a higher value in C0121.
x058	OH8	Motor temperature via inputs T1 and T2 is too high.	Motor is thermally overloaded due to: ● Impermissible continuous current ● Frequent or too long acceleration processes	● Check drive dimensioning. ● Switch off monitoring (C0585 = 3).
			Terminals T1 and T2 are not connected	Connect PTC/temperature contact.
x061	CE0	Automation interface (AIF) communication error	Faulty transfer of control commands via AIF.	● Plug in the communication module/keypad XT firmly, screw down, if necessary. ● Switch off monitoring (C0126 = 3).
x062	CE1	Communication error on the process data input object CAN1_IN	CAN1_IN object receives faulty data or communication is interrupted.	● Check wiring at X4. ● Check sender. ● Increase monitoring time under C0357/1, if necessary. ● Switch off monitoring (C0591 = 3).
x063	CE2	Communication error on the process data input object CAN2_IN	CAN2_IN object receives faulty data or communication is interrupted.	● Check wiring at X4. ● Check sender. ● Increase monitoring time under C0357/2, if necessary. ● Switch off monitoring (C0592 = 3).
x064	CE3	Communication error on the process data input object CAN3_IN	CAN3_IN object receives faulty data or communication is interrupted.	● Check wiring at X4. ● Check sender. ● Increase monitoring time under C0357/3, if necessary. ● Switch off monitoring (C0593 = 3).

Fault message		Description	Cause	Remedy
No.	Display			
x065	CE4	BUS-OFF state of system bus (CAN)	The controller has received too many faulty telegrams via the system bus (CAN) and has disconnected from the bus.	• Check wiring at X4: Is the bus correctly terminated? • Check shield connection of the cables. • Check PE connection. • Check bus load, reduce the baud rate if necessary. (Observe the cable length!) • Switch off the monitoring (C0595 = 3).
0071	CCr	System failure	Strong interference injection on the control cables	Screen control cables
			Ground or earth loops in the wiring	• Check wiring • Check PE connection
				After troubleshooting: Deenergise the device completely (disconnect 24 V supply, discharge DC bus)!
0072	PR1	Checksum error in parameter set 1 **CAUTION: The Lenze setting is loaded automatically!**	• Fault when loading a parameter set. • Interruption while transmitting the parameter set via keypad.	• Set the required parameters and store them under C0003 = 1. • As to PLC devices, check the use of pointers.
			The stored parameters are incompatible with the loaded software version.	Store the parameter set under C0003 = 1 first to allow for a faults reset.
0073	PR2	Checksum error in parameter set 2 **PLEASE NOTE: The Lenze setting is loaded automatically!**	• Fault while loading a parameter set. • Interruption during the transfer of the parameter set via keypad.	• Set the required parameters and save them with C0003 = 2.
			The parameters saved do not comply with the software version loaded.	In order to be able to acknowledge the error, first save the parameter set with C0003 = 2.
0074	PEr	Program error	Error in the program flow	Send the parameter set (on floppy disk/CD-ROM) with a detailed description of the problem to Lenze. **After troubleshooting: Deenergise the device completely (disconnect 24 V supply, discharge DC bus)!**
0075	PR0	Error in parameter set.	The operating system software has been updated.	Storage of the Lenze setting C0003 = 1.
				After troubleshooting: Deenergise the device completely (disconnect 24 V supply, discharge DC bus)!
0077	PR3	Checksum error in parameter set 3 **PLEASE NOTE: The Lenze setting is loaded automatically!**	• Fault while loading a parameter set. • Interruption during the transfer of the parameter set via keypad.	• Set the required parameters and save them with C0003 = 3.
			The parameters saved do not comply with the software version loaded.	In order to be able to acknowledge the error, first save the parameter set with C0003 = 3.
0078	PR4	Checksum error in parameter set 4 **PLEASE NOTE: The Lenze setting is loaded automatically!**	• Fault while loading a parameter set. • Interruption during the transfer of the parameter set via keypad.	• Set the required parameters and save them with C0003 = 4.
			The parameters saved do not comply with the software version loaded.	In order to be able to acknowledge the error, first save the parameter set with C0003 = 4.

Fault message		Description	Cause	Remedy
No.	Display			
0079	PI	Fault during parameter initialisation	● An error has been detected during the parameter set transfer between two devices. ● The parameter set does not match the controller, e.g. if data has been transferred from a higher-power controller to a lower-power controller.	● Correct parameter set. ● Send parameter set (on floppy disk/CD-ROM) and a detailed description of the problem to Lenze.
x082	Sd2	Resolver error at X7	Resolver cable interrupted.	● Check cable for open circuit. ● Check resolver. ● Switch off the monitoring (C0586 = 3).
x083	Sd3	Encoder error at X9	Cable interrupted.	Check cable for open circuit.
			Pin X9/8 not connected.	Apply 5 V to pin X9/8 or switch off monitoring (C0587 = 3).
x085	Sd5	Encoder error at X6/1 and X6/2 (C0034 = 1)	Current signal at X6/1 X6/2 < 2mA.	● Check cable for open circuit. ● Check current signal encoder. ● Switch off monitoring (C0598 = 3).
x086	Sd6	Motor temperature sensor error (X7 or X8)	Encoder for detecting the motor temperature at X7 or X8 indicates undefined values.	● Check cable for firm connection. ● Switch off the monitoring (C0594 = 3).
x087	Sd7	Selection of the feedback in C0025 as absolute value encoder or alteration of the encoder constant in C0420 for setting C0025 ≥ 309	The absolute value encoder must be initialised.	Save parameter set, then completely deenergise the device, and afterwards switch it on again.
		Initialisation error of absolute value encoder at X8	● Defect of the encoder electronics ● Absolute value encoder at X8 does not send data. **Tip:** The encoder must not rotate during mains switching.	● Make sure that the cable at X8 is tightened properly, and check it with regard to open circuit. ● Check absolute value encoder with regard to correct function. ● Set voltage supply via C0421 to 8.0 V. ● No Stegmann encoder connected. ● Replace defective encoder.
		Communication error of absolute value encoder at X8 during rotor position adjustment	A rotor position adjustment via C0095 = 1 could not be completed successfully.	Repeat rotor position adjustment. 📖 6.8-1 **Note:** After an Sd7 fault it is absolutely required to carry out another rotor position adjustment. Otherwise the drive may carry out uncontrolled movements after controller enable. The drive must not be commissioned without a successfully executed rotor position adjustment!
				After fault elimination: Completely deenergise device (switch off 24 V supply, discharge DC bus)!

Fault message		Description	Cause	Remedy
No.	Display			
x088	Sd8	SinCos encoder at X8 sends inconsistent data.	The tracks in the SinCos encoder are damaged.	Replace SinCos encoder.
			Interference level on the encoder cable is too high.	● Check correct shield connection of encoder cable. ● Where required, decelerate the actuation of the fault message via the filter time constant. Setting: – for ECSxS/P/M/A in C0559. – for 9300 servo cam in C0575.
		SinCos encoder at X8 does not send any data.	Open circuit.	Check cable for wire breakage.
			Incorrect encoder connected.	Connect SinCos encoder of the Stegmann company.
			SinCos encoder is defective.	Replace SinCos encoder.
			Supply voltage set incorrectly.	Set voltage supply in C0421.
				After fault correction: completely deenergise the device (switch off 24 V supply, discharge DC bus)!
x089	PL	Error during rotor position adjustment (the error is saved with mains failure protection)	● The rotor position adjustment was cancelled. ● During rotor position adjustment with an absolute value encoder the error Sd7 or SD8 occurred.	Repeat rotor position adjustment. 📖 6.8-1 **Note:** After an Sd7 fault it is absolutely required to carry out another rotor position adjustment. Otherwise the drive may carry out uncontrolled movements after controller enable. The drive must not be commissioned without a successfully executed rotor position adjustment!
x091	EEr	External monitoring has been triggered via **DCTRL**.	A digital signal assigned to the TRIP-SET function has been activated.	● Check external encoder. ● Switch off the monitoring (C0581 = 3).
0105	H05	Internal fault (memory)		Contact Lenze.
0107	H07	Internal fault (power stage)	During initialisation of the controller, an incorrect power stage was detected.	Contact Lenze.
x110	H10	Heatsink temperature sensor error	Sensor for detecting the heatsink temperature indicates undefined values.	● Contact Lenze. ● Switch off the monitoring (C0588 = 3).
x111	H11	Temperature sensor error: Temperature inside the controller	Sensor for detecting the internal temperature indicates undefined values.	● Contact Lenze. ● Switch off the monitoring (C0588 = 3).
x151	P01	Error ”negative limit switch”.	Negative limit switch was reached.	● Control drive in positive direction ● Check wiring at X5/E2.
x152	P02	Error ”positive limit switch”.	Positive limit switch was reached.	● Control drive in negative direction ● Check wiring at X5/E1.
x153	P03	Following error	The angle difference between set and actual position is larger than the following error limit set under C0255.	● Increase following error limit under C0255. ● Switch off the monitoring (C0589 = 3).
			Drive cannot follow the digital frequency (I_{max} limit).	Check drive dimensioning.

Fault message		Description	Cause	Remedy
No.	Display			
x154	P04	Error ”negative position limit”.	Negative position limit (C1224) was not reached.	Find out why the value was not reached (e.g. ”incorrect” position targets, set function position value) and adjust the position limit in C1224 if necessary.
x155	P05	Error ”positive position limit”.	Positive position limit (C1223) was exceeded.	Find out why the value was exceeded (e.g. ”incorrect” position targets, set function position value) and adjust the position limit in C1223 if necessary.
x156	P06	No reference.	The reference point is not known. In the case of absolute positioning, no homing was performed before the first positioning.	Perform one of the following functions and restart: ● Manual homing. ● Start homing in the program. ● Set reference.
x157	P07	Parameter set mode is absolute instead of relative.	An absolute parameter set (C1311) was performed during relative positioning (position mode C1210).	Perform one of the following functions and restart: ● Change the parameter set from absolute to relative. ● Change position mode.
x158	P08	Error ”actual reference dimension offset”.	Actual reference dimension offset (C1226) outside the position limits. Error of the program function ”set position value”.	If necessary, adapt the position limit values or check whether the program function ”set position value” is to be applied.
x159	P09	Error in positioning program.	Impermissible programming	Check position program: ● A parameter set with final speed must be followed by a parameter set with positioning; it is not permissible to wait for input.
x162	P12	Error in the range of the encoder.	The range of the absolute encoder was exceeded.	● Return drive by manual positioning. ● Check position limits and adjustment of the encoder. ● Design and mount the absolute encoder in a way that does not exceed the traversing range.
x163	P13	Angle overrun.	● Phase controller limit reached ● Drive cannot follow the digital frequency (I_{max} limit).	● Enable drive ● Check drive dimensioning.
x164	P14	1. Following error.	The drive cannot follow the setpoint. The following error is greater than the limit value in C1218/1.	● Increase current limit under C0022 (observe max. motor current). ● Reduce acceleration. ● Check drive dimensioning. ● Increase limit value under C1218/1
x165	P15	2. Following error.	The drive cannot follow the setpoint. The following error is greater than the limit value in C1218/2.	● Increase current limit C0022 (observe max. motor current). ● Reduce acceleration. ● Check drive dimensioning. ● Increase limit value under C1218/2

Fault message		Description	Cause	Remedy
No.	Display			
x166	P16	Faulty transfer of system bus (CAN) sync telegram.	The sync telegram from the master (PLC) is out of sync cycle.	● Set the ”sync cycle” to the transmission cycle of the master (PLC) under C1121. ● Note: – C0362 displays the time interval between 2 sync telegrams. – C0362 = 0: communication interrupted.
			The sync telegram of the master (PLC) is not received.	● Check communication channel. ● Check baud rate, controller address. ● Note: – C0362 displays the time interval between 2 sync telegrams. – C0362 = 0: communication interrupted.
			The controller is enabled too fast.	Delay the controller enable. The time delay required depends on the time interval between the sync telegrams.
x167	P17	Error ”touch probe control”.	Various function blocks use the touch probe input at the same time (e.g. FB DFSET and POS). A conflict arises.	● Configure another touch probe input for FB POS (not possible for FB DFSET). ● Switch off monitoring (C1289/1).
x168	P18	Internal limitation.	Arithmetic operation generated data cannot be varied arbitrarily. Wrongly specified values were automatically limited internally.	
			C1298 = 1: The negative position limit in C1223 is outside the possible display range of $1 \leq (C1223 \times C1205) \leq 1.07E9$ inc	Check the values in C1202/4, C1207/1, C1207/2. Read out the limited value in C1220/10 and enter it in C1223 if necessary.
			C1298 = 2: The positive position limit in C1224 is outside the possible display range of $1 \leq (C1224 \times C1205) \leq 1.07E9$ inc	Check the values in C1202/4, C1207/1, C1207/2. Read out the limited value in C1220/11 and enter it in C1224 if necessary.
			C1298 = 3: The maximum speed v_{max} in C1240 is outside the possible display range of $1 \leq (C1240 \times C1205 \times 16.384) \leq 2.14E9$ inc or v_{max} not $C1240 / C1204 \times 60 \leq 1.5 \times n_{max}$	Check the values in C0011, C1202/4, C1207/1, C1207/2. Read out the limited value in C1220/12 and enter it in C1240 or adjust the value in C1240 to C0011 if necessary.
			C1298 = 4: The maximum acceleration a_{max} in C1250 is outside the possible display range of $1 \leq (C1250 \times C1205 \times 16.384 / 1000) \leq 2.8634E7$ inc	Check the values in C1202/4, C1207/1, C1207/2. Read out the limited value in C1220/13 and enter it in C1250 if necessary.
			C1298 = 5: An internal value range has been exceeded for a speed standardisation. Valid range: $1 \leq (C0011 \times C1207/1 / C1207/2\ 65536 / 60000) \leq 32767$	Check the values in C0011, C1207/1, C1207/2 and correct them.

Fault message		Description	Cause	Remedy
No.	Display			
x169	P19	The input values at X9 are limited.	The function block DFIN limits the input values. This causes the loss of increments.	● Reduce the frequency on the digital frequency connection. ● Check the settings for the slave (C0425) and for the master (C0030). These settings must be identical.
x190	nErr	Speed control error (Speed out of tolerance margin (C0576))	● Active load (e.g. for hoists) is too high. ● Mechanical blockades on the load side	Check drive dimensioning.
x200	NMAX	Maximum system speed (C0596) has been exceeded.	● Active load (e.g. for hoists) is too high. ● Drive is not speed-controlled, torque is excessively limited.	● Check drive dimensioning. ● Increase torque limit, if necessary. ● Switch off monitoring (C0607 = 3).

Representation of the error number:
x 0 = TRIP, 1 = message, 2 = warning
E. g. ”2091”: An external monitoring function has triggered EEr warning

9.3.2 Resetting system error messages

Reaction	Measures to reset the fault message
TRIP/ FAIL-QSP	**Note!** If a TRIP/FAIL QSP source is still active, the pending TRIP/FAIL QSP cannot be reset. The TRIP/FAIL QSP can be reset by: ● pressing ⇨ STOP on keypad XT EMZ9371 BC. Then, press RUN to re-enable the controller. ● Set code C0043 = 0. ● Control word C0135, bit 11 ● Control word AIF ● Control word system bus (CAN) / MotionBus (CAN) at ECSxS/P/M After the reset of the TRIP/FAIL QSP, the drive remains at standstill.
Message	**Danger!** The fault message is reset automatically after the fault has been eliminated, and the drive restarts automatically.
Warning	After the fault has been eliminated, the fault message is reset automatically.

10 DC-bus operation

Contents

10.1 Function 10.1-1
10.2 Conditions for trouble-free DC-bus operation 10.2-1
10.3 Fuses and cable cross-sections 10.3-1
10.4 Distributed supply (several supply points) 10.4-1
10.5 Central supply (one supply point) 10.5-1

10.1 Function

- DC-bus connections of drive systems enable the exchange of energy between connected controllers.
- If one or more controllers operate in generator mode (braking operation), the energy will be fed into the shared DC-voltage bus. The energy will then be available to the controllers which operate in motor mode.
- The use of braking units and supply units can be reduced.
- The energy consumption from the three-phase AC mains can be reduced.
- The number of mains supplies and the related expenses (e.g. wiring) can be perfectly adapted to your application.

10.2 Conditions for trouble-free DC-bus operation

- ► Distributed supply (parallel mains supply):
  - – Always use the prescribed mains choke when connecting a controller to the mains.
  - – Controllers of the EVx9321 ... EVx9333, 8200 and 8200 vector series must not be connected to the mains if they are operated in a DC-bus connection with EVx9335 ... EVx9338 and EVx9381 ... EVx9383 controllers.
- ► Only controllers with identical mains voltage/DC bus voltage ranges can be operated in a DC-bus connection:
  - – Set the mains voltage/DC-bus voltage under C0173.
- ► 9340 regenerative power supply modules and 9360 DC input modules cannot be used together in the DC-bus connection.
- ► Read the documentation for the other controllers connected to the DC bus with regard to ”DC-bus operation”.

10.3 Fuses and cable cross-sections

Note!

- **All fuses specified here only have the purpose of disconnection after a short circuit.** For cable protection specific fuses must be used.
- In the following tables the rated currents of the Lenze fuses are listed. If other fuses are used, other fuse currents and cable cross-sections may result.
- We recommend using fuse holders with a signalling contact. Like this, the entire drive system can be switched off (inhibited) when a fuse fails.
- Always fuse DC cables using 2 poles ($+U_G$, $-U_G$).

Installation in accordance with EN 60204-1

Supply conditions	
Range	Description
Mains	DC 460 ... 740 V
Fuses	• Only semiconductor fuses. • If you are using fuses other than those indicated, other fuse currents and cable cross-sections may result.
Cables	• DC cables ($+U_G$, $-U_G$) must always have two-pole insulation. • Laying systems B2 and C: Use of PVC-insulated copper cables, conductor temperature < 70 °C, ambient temperature < 40 °C, no bundling of cables or cores, three loaded cores. The information is a recommendation. Other designs/laying systems are possible (e.g. according to VDE 0298-4).
Observe all national and regional regulations!	

Inverter		DC fuse 14 × 51 (EFSGR0xx0AYHx)	DC fuse 22 × 58 (EFSGR0xx0AYIx)	Installation in accordance with EN 60204-1	
Type	Mains	Rated current of fuse	Rated current of fuse	$+U_G$, $-U_G$ Laying system	
				B2	C
		[A]	[A]	[mm²]	[mm²]
EVS9321	3/PE 400 V	12	12	1.5	1.5
EVS9322		12	12	1.5	1.5
EVS9323		12	12	1.5	1.5
EVS9324		20	20	1.5	1.5
EVS9325		40	40	4.0	4.0
EVS9326		50	50	6.0 [1)]	4.0

1) Pin-end connector required, since a maximum cable cross-section of 4 mm² can be connected to the inverter.

Inverter		DC fuse NH1 (EFSGRxxx0ANVx)	DC fuse 22 × 58 (EFSGR0xx0AYIx)	Installation in accordance with EN 60204-1	
Type	Mains	Rated current of fuse	Rated current of fuse	$+U_G$, $-U_G$ Laying system	
				B2	C
		[A]	[A]	[mm²]	[mm²]
EVS9327	3/PE 400 V	100	100	-	25
EVS9328		100	100	-	25
EVS9329		200	-	-	25
EVS9330		200	-	-	50
EVS9331		200	-	-	50

Inverter		DC fuse NH2 (EFSGRxxx0ANWx)	DC fuse 22 × 58 (EFSGR0xx0AYIx)	Installation in accordance with EN 60204-1	
Type	Mains	Rated current of fuse	Rated current of fuse	$+U_G$, $-U_G$ Laying system	
				B2	C
		[A]	[A]	[mm²]	[mm²]
EVS9332	3/PE 400 V	250	-	-	95

10.4 Distributed supply (several supply points)

Basic circuit diagram

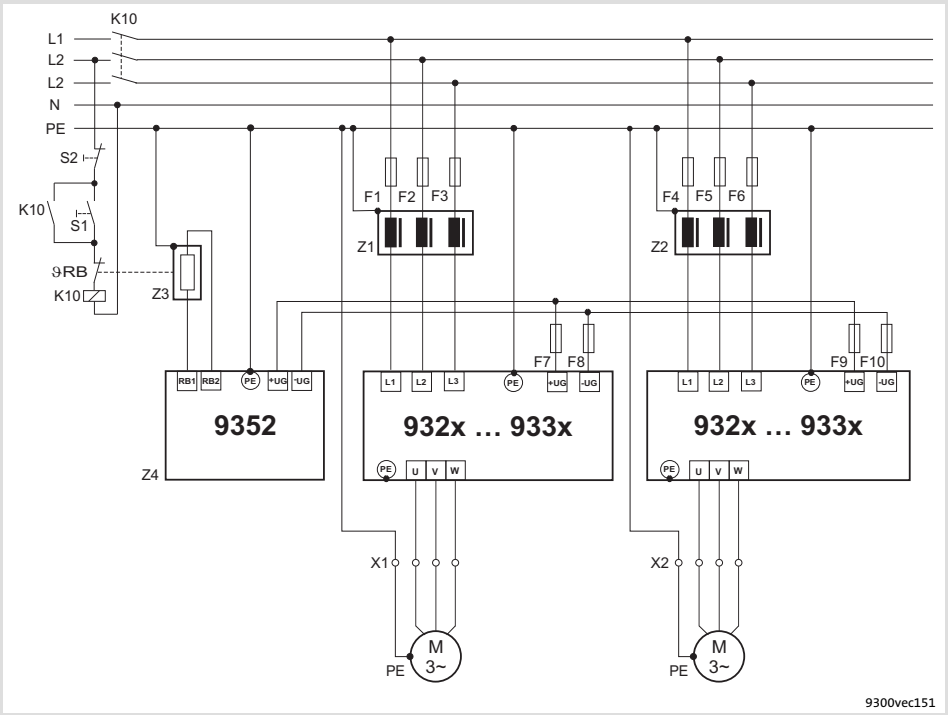

Fig. 10.4-1 Basic circuit diagram of a distributed supply with brake chopper

F1 ... F10	Fusing
K10	Mains contactor
Z1, Z2	Mains choke / mains filter
Z3	Brake resistor
Z4	Brake chopper
S1	Mains supply on
S2	Mains supply off

► Dimension the components according to the requirements of the DC-bus operation.

Stop!

Set the DC-bus voltage thresholds of the controller (C0173) and the brake chopper (see documentation of the brake chopper) to the same values.

10.5 Central supply (one supply point)

Basic circuit diagram

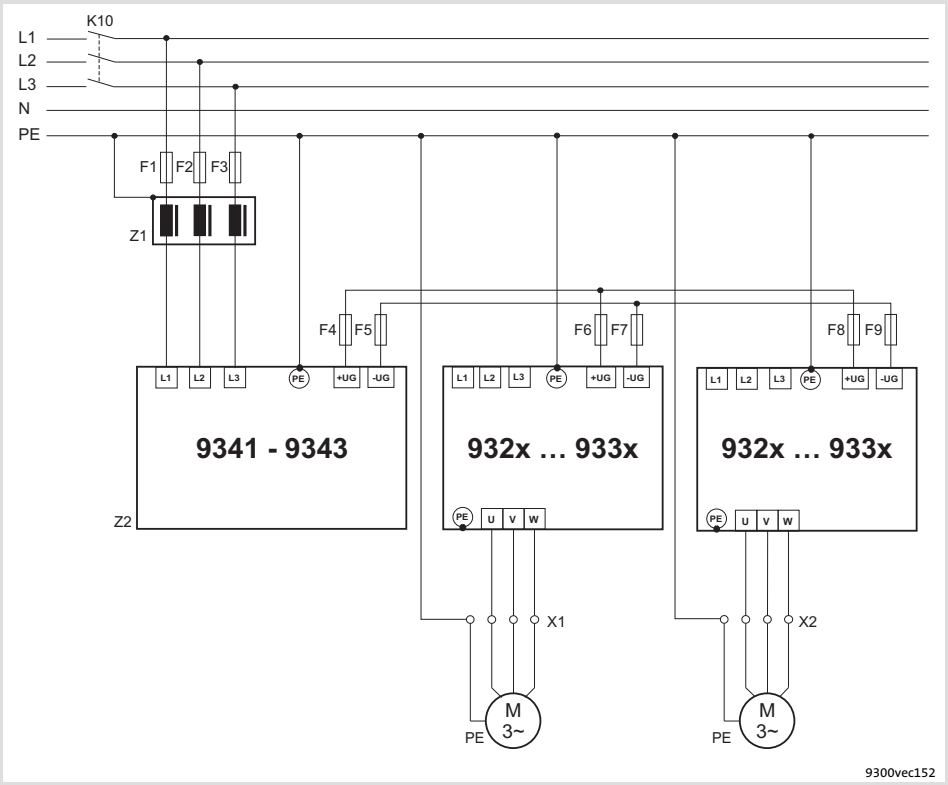

Fig. 10.5-1 Basic circuit diagram of a central supply with regenerative power supply module

F1 ... F9	Fusing
K10	Mains contactor
Z1	Mains choke / mains filter
Z2	Regenerative power supply module

► Dimension the components according to the requirements of the DC-bus operation.

Note!

► If the supply power of the regenerative power supply module is not sufficient, the system can be additionally supplied via the mains connection of further controllers.

► Before connecting the supply module and the controllers read the Operating Instructions of the regenerative power supply module.

11 Safety engineering

Contents

11.1 Important notes 11.1-1
11.2 Operating mode 11.2-1
11.3 Safety relay KSR 11.3-1
11.4 Wiring 11.4-1
11.5 Functional test 11.5-1
11.5.1 Important notes 11.5-1
11.5.2 Manual safety function check 11.5-2
11.5.3 Monitoring the safety function with a PLC 11.5-3

11.1 Important notes

The controllers support the safety functions ”Safe torque off” (former designation ”Safe standstill”), ”Protection against unexpected start-up”, in accordance with the requirements of control category 3 of ISO 13849-1 (former EN 954-1). Depending on the external interconnection, a standard up to ”category 3” in accordance with ISO 13849-1 is achieved.

Note!

In order to comply with control category 3 in accordance with ISO 13849-1 (former EN 954-1), the two methods ”Pulse inhibit via safety relay K_{SR}” **and** ”Controller inhibit”, which are independent of each other, have to be used.

- ► Only qualified personnel may install and commission the “Safe torque off” function.
- ► All control components (switches, relays, PLC, ...) and the control cabinet must comply with the requirements of EN ISO 13849-1 and EN ISO 13849-2. This includes among other things:
  - – Control cabinet, switches, relays in enclosure IP54!
  - – All other requirements can be found in EN ISO 13849-1 and EN ISO 13849-2!
- ► Wiring with insulated wire end ferrules or rigid cables is absolutely required.
- ► All safety-relevant cables (e.g. control cable for the safety relay, feedback contact) outside the control cabinet must be protected, e.g. by a cable duct. It must be ensured that short circuits between the individual cables cannot occur!
- ► With the “Safe torque off” function no emergency stop can be effected without additional measures:
  - – There is neither an electrical isolation between motor and controller nor a service or repair switch!
  - – An ”Emergency stop” requires the electrical isolation of the conductor to the motor, e.g. by means of a central mains contactor with emergency stop wiring.
- ► If in the case of the ”Safe torque off” a force effect is to be expected from outside, (e.g. sagging of hanging loads), additional measures are required (e.g. mechanical brakes).
- ► After the installation the operator has to check the function of the ”Safe torque off” circuit.
  - – The functional test must be repeated at regular intervals.
  - – Basically, the inspection intervals depend on the application, the related risk analysis, and the overall system. The inspection intervals must not be longer than 1 year.

11.2 Operating mode

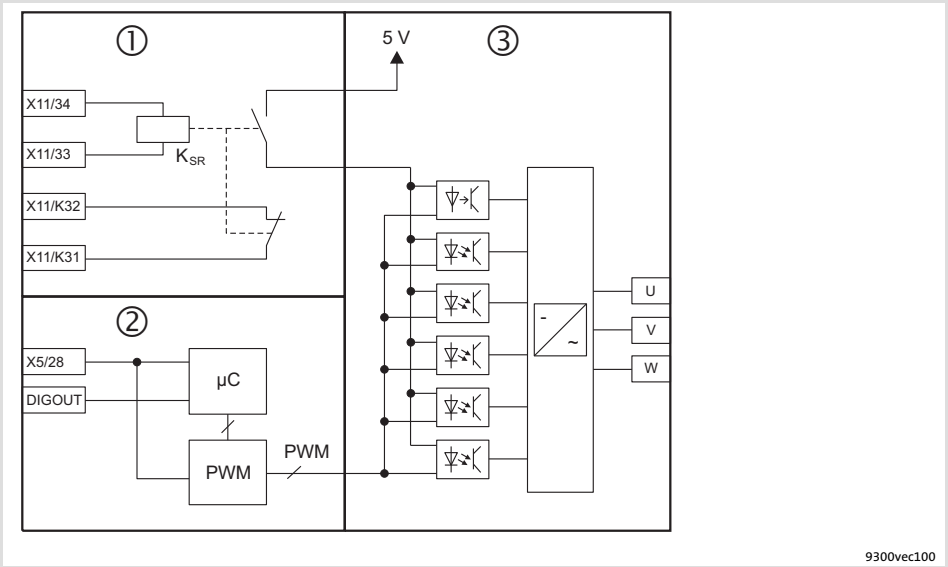

Fig. 11.2-1 Internal connection of the ”Safe torque off” function with 3 electrically isolated circuits

Area ①:	Pulse inhibit via safety relay K_{SR}; forcibly guided feedback for monitoring the safety relay
Area ②:	Controller inhibit (X5/28), optional feedback via a digital output (DIGOUT)
Area ③:	Power output stage

Activating ”Safe torque off”

The ”Safe torque off” status is activated via two different disconnecting paths which are independent of each other:

1. disconnecting path: Pulse inhibit via safety relay K_{SR} (terminal X11/33, X11/34)

► In the case of LOW level at terminals X11/33, X11/34, the safety relay K_{SR} is deactivated.The driver supply of the power section drivers is interrupted. The inverter no longer receives pulses.

► The disconnection of the safety relay K_{SR} has to be monitored externally, so that a failure of this disconnecting path can be detected. X11/K31, X11/K32 is a forcibly guided break contact, i. e. if the safety relay K_{SR} has been deactivated (”Safe torque off” activated), the contact is closed.

2. disconnecting path: Controller inhibit by input signal at terminal X5/28

► The input signal at X5/28 is fed to the microcontroller system and the PWM unit. In the case of LOW level at terminal X5/28, the output of pulses to the inverter is inhibited in the microcontroller system.

► The disconnecting path ”Controller inhibit” can be evaluated optionally via a digital output. Further information can be gathered from the chapter ”Functional test” (📖 11.5-1).

”Safe torque off” is activated if **both disconnecting paths are on LOW level**.

Deactivating ”Safe torque off”

An AND operation of the disconnecting paths prevents the drive from restarting if only one disconnecting path is enabled.

”Safe torque off” is deactivated if **both disconnecting paths are on HIGH level**.

11.3 Safety relay K_{SR}

Technical data

Terminal	Description	Field	Values
X11/K32 X11/K31 X11/33 X11/34	Safety relay K_{SR} 1st disconnecting path	Coil voltage at +20 °C	DC 24 V (20 ... 30 V)
		Coil resistance at +20 °C	823 Ω ±10 %
		Rated coil power	Approx. 700 mW
		Max. switching voltage	AC 250 V, DC 250 V (0.45 A)
		Max. AC switching capacity	1500 VA
		Max. switching current (ohmic load)	AC 6 A (250 V), DC 6 A (50 V)
		Recommended minimum load	> 50 mW
		Max. switching rate	6 switchings per minute
		Mechanical service life	10^7 switching cycles
		Electrical service life	
		at 250 V AC (ohmic load)	10^5 switching cycles at 6 A 10^6 switching cycles at 1 A 10^7 switching cycles at 0.25 A
		at 24 V DC (ohmic load)	6×10^3 switching cycles at 6 A 10^6 switching cycles at 3 A 1.5×10^6 switching cycles at 1 A 10^7 switching cycles at 0.1 A

11.4 Wiring

Wiring

Danger!

Faulty operation in case of earth faults possible

The correct functioning of the safety function is not ensured if an earth fault occurs.

Possible consequences:

► A failure of the safety function can lead to death, severe injuries or damage to material.

Protective measures:

The electrical reference point for the coil of the safety relay K_{SR} must be connected to the PE conductor system (EN 60204-1, paragraph 9.4.3)!

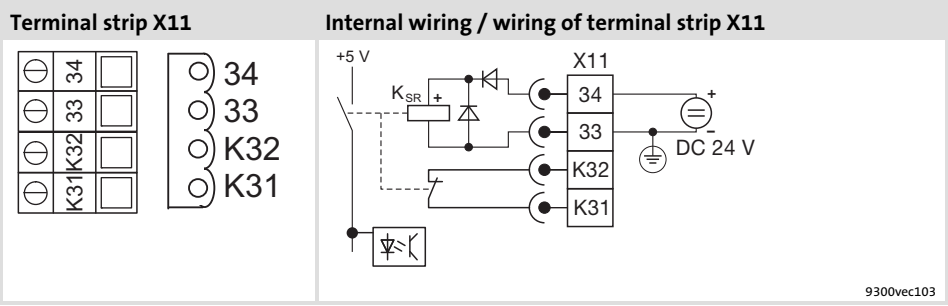

Fig. 11.4-1 Safety relay K_{SR}

Terminal		Function Bold print = **Lenze setting**	Level / state	Electrical data
X11/K32 X11/K31	Safety relay K_{SR} 1st disconnecting path	Feedback - pulse inhibit	Open contact: Pulse inhibit is inactive (operation) Closed contact: Pulse inhibit is active	See technical data of the safety relay K_{SR}
X11/33		– coil of safety relay K_{SR}	Coil is not carrying any current: pulse inhibit is active	
X11/34		+ coil of safety relay K_{SR}	Coil is carrying current: pulse inhibit is inactive (operation)	
X5/28	Controller inhibit (DCTRL-CINH) 2nd disconnecting path	Controller enable/inhibit	LOW: Controller inhibited HIGH: Controller enabled	LOW: 0 ... +3 V HIGH: +12 ... +30 V
				Input current at +24 V: 8 mA
				Reading and processing the input signals - 1/ms (mean value)

Terminal data

Wiring of the terminals X11/34, X11/33, X11/K32, X11/K31, X5/28:

Leitungstyp	Wire end ferrule	Cable cross-section	Tightening torque	Stripping length
Rigid	–	2,5 mm² (AWG 14)	0,5 ... 0,6 Nm (4.4 ... 5.3 lb-in)	5 mm
Flexible	With plastic sleeve	2,5 mm² (AWG 14)		

11.5 Functional test

11.5.1 Important notes

Danger!

Unexpected start-up of the machine possible

The ”Safe torque off” safety function provides protection against an unexpected start-up of the drive and therefore is an important item within the safety concept for a machine. It has to be ensured that this function works correctly.

Possible consequences:

► Death, severe injury, or damage to material assets, when the safety function fails.

Protective measures:

After the installation and at regular intervals, the operator has to check the function of the ”Safe torque off” circuit.

► When doing this, check both disconnecting paths separately with regard to their disconnection capability.

► The functional test can be carried out manually or automatically via the PLC.

► Basically the inspection interval depends on the application and the corresponding risk analysis, as well as on the system as a whole. It should not exceed 1 year.

► If the functional test shows impermissible states,
– the drive or the machine has to be shut down immediately.
– commissioning is not permitted until the safety function operates correctly.

11.5.2 Manual safety function check

For the functional test, check both disconnecting paths **separately**.

1. disconnecting path: Pulse inhibit via safety relay K_{SR}

How to proceed during the test:

1. Alternately apply LOW and HIGH level to input X11/34 and check the states given in the table below.

	Specification	Correct status
Individual test	**Input relay activation (X11/34)**	**Output feedback (X11/K31)**
Pulse inhibit	LOW	HIGH
Pulse enable	HIGH	LOW

The individual tests are passed if the correct states given in the table result.

2. disconnecting path: Controller inihibit

Requirement for the test:

► ”Quickstop” (QSP) function deactivated

► ”Automatic DC injection brake” deactivated (C0019 = 0)

► Pulses enabled by the safety relay K_{SR} (X11/34 = HIGH)

How to proceed during the test:

1. Set controller inhibit (X5/28 = LOW).
2. Define a setpoint n_{set} > 0.
3. Check that the motor is not rotating.

The individual test is passed if the motor does not rotate.

Functional test not passed

If an individual test results in an impermissible status, the functional test is not passed.

► The drive or machine has to be shut down immediately.

► Commissioning is not permitted until the safety function operates correctly.

11.5.3 Monitoring the safety function with a PLC

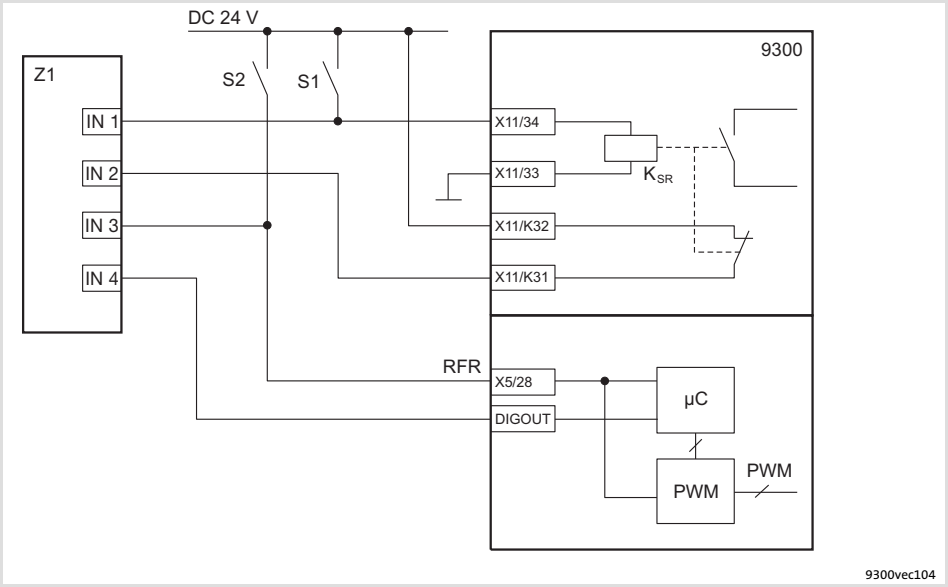

Fig. 11.5-1 Circuit diagram for monitoring the safety function with a PLC

S1, S2	Separate disconnection options of the two disconnecting paths
K_{SR}	Safety relay
X11/34	Safety relay control
X11/33	Safety relay control (GND)
X11/K32	Forcibly guided feedback contact (24 V)
X11/K31	Forcibly guided feedback contact
DIGOUT	Digital output for evaluating the motor current
X5/28	Controller inhibit
Z1	Programmable logic controller (PLC)
IN 1 - 4	Digital inputs

Requirements

The following conditions must be met:

- ► The PLC must be programmed such that the complete system is set to a safe state immediately when the function check leads to an impermissible state.
- ► The parameter setting of a digital output must be such that you can conclude to the output current I_{motor} of the drive (see parameterisation example).

Example: Parameterising a digital output

In the following we will show you a possibility of parameterising a digital output, so that a conclusion with regard to the motor current is provided.

Sequence		Parameter	Note
1.	Configure function block CMP3 (comparator)		
	● Connect CMP3-IN1 to MCTRL-IACT	C0693/1 = 5004	
	● Connect CMP3-IN2 to FCODE-472/1	C0693/2 = 19521	
	● Configure the function IN1 < IN2	C0690 = 3	
2.	Configure output signal of CMP3 ● Connect DIGOUT4 to CMP3-OUT	C0117/4 = 10660	
3.	Enter function block CMP3 in the processing table		
	● Select a free space in the processing table In the Lenze setting, for instance space 2 of the processing table is free	C0465/2 = 10660	
4.	Set the current threshold ● Set the current threshold for I_{rated_FI} to 2 %	C0472/1 = 2.00	$I_{Motor} = 0 \rightarrow$ DIGOUT4 = HIGH $I_{Motor} \neq 0 \rightarrow$ DIGOUT4 = LOW

Functional test within the inspection interval

For the functional test, check both disconnecting paths **separately**.

1. disconnecting path: Pulse inhibit via safety relay K_{SR}

The individual tests are passed if the correct states given in the table result.

	Specification	Correct status
Individual test	**Input relay activation (X11/34)**	**Output feedback (X11/K31)**
Pulse inhibit	LOW	HIGH
Pulse enable	HIGH	LOW

2. disconnecting path: Controller inihibit

Requirement for the test:

► ”Quickstop” (QSP) function deactivated

► ”Automatic DC injection brake” deactivated (C0019 = 0)

► Pulses enabled by the safety relay K_{SR} (X11/34 = HIGH)

The individual tests are passed if the correct states given in the table result.

	Specification		Correct status
Individual test	**X5/28**	**Setpoint**	**Output DIGOUT**
Controller inhibit	LOW	$n_{set} > 0$	HIGH
Controller enable	HIGH		LOW

Functional test not passed

If an individual test results in an impermissible status, the functional test is not passed.

► The drive or machine has to be shut down immediately.

► Commissioning is not permitted until the safety function operates correctly.

12 Accessories (overview)

Contents

12.1 General accessories 12.1-1
12.2 Type-specific accessories 12.2-1

12.1 General accessories

Accessories	Designation		Order number
Communication modules	LECOM-LI (optical fibre)		EMF2102IBCV003
	LECOM-B (RS485)		EMF2102IBCV002
	LECOM-A/B (RS232/485)		EMF2102IBCV001
	LON		EMF2141IB
	INTERBUS		EMF2113IB
	INTERBUS-Loop		EMF2112IB
	PROFIBUS-DP		EMF2133IB
	DeviceNet/CANopen		EMF2175IB
	Operating module keypad XT		EMZ9371BC
	Diagnosis terminal (keypad XT in handheld design, IP20) [1)]		E82ZBBXC
Other	Connecting cable	2.5 m	E82ZWL025
		5 m	E82ZWL050
		10 m	E82ZWL100
	Parameterisation/operating software »Global Drive Control« (GDC)		ESP-GDC2
	PC system bus adapter (Voltage supply via DIN connection)		EMF2173IB
	PC system bus adapter (Voltage supply via PS2 connection)		EMF2173IB-V002
	PC system bus adapter (Voltage supply via PS2 connection, electrical isolation)		EMF2173IB-V003
	PC system bus adapter USB		EMF2177IB
	CAN repeater		EMF2176IB
	PC system cable RS232	5 m	EWL0020
		10 m	EWL0021
	Optical fibre adapter (standard output power)		EMF2125IB
	Optical fibre adapter (increased output power)		EMF2126IB
	Power supply unit for optical fibre adapter		EJ0013
	Optical fibre, single-core, black PE sheath (basic protection), sold by the meter		EWZ0007
	Optical fibre, single-core, red PUR sheath (reinforced protection), sold by the meter		EWZ0006
	Setpoint potentiometer		ERPD0010k0001W
	Rotary knob for setpoint potentiometer		ERZ0001
	Scale for setpoint potentiometer		ERZ0002
	Digital display		EPD203
	Encoder cable	2.5 m	EWLE002GX-T
		5.0 m	EWLE005GX-T
		10.0 m	EWLE010GX-T
		15.0 m	EWLE015GX-T
		20.0 m	EWLE020GX-T
		25.0 m	EWLE025GX-T
		30.0 m	EWLE030GX-T
		35.0 m	EWLE035GX-T
		40.0 m	EWLE040GX-T
		45.0 m	EWLE045GX-T
		50.0 m	EWLE050GX-T

Accessories	Designation		Order number
	Connecting cable for digital frequency coupling	2.5 m	EWLD002GGBS93

1) Additional connecting cable required

Tip!

Information and auxiliary devices related to the Lenze products can be found in the download area at

http://www.Lenze.com

12.2 Type-specific accessories

9300	EVS9321	EVS9322	EVS9323	EVS9324
Accessories	Order No.			
Mains choke	EZN3A2400H002	EZN3A1500H003	EZN3A0900H004	EZN3A0500H007
Mains filter				
Category C2 EN 61800-3	EZN3A2400H002	EZN3A1500H003	EZN3A0900H004	EZN3A0500H007
Category C1 EN 61800-3	EZN3B2400H002	EZN3B1500H003	EZN3B0900H004	EZN3B0500H007
Brake chopper	EMB9352-E	EMB9352-E	EMB9352-E	EMB9352-E
Brake resistor	ERBD180R300W	ERBD180R300W	ERBD082R600W	ERBD068R800W
Shield mounting kit				
Control cable	EZZ0015	EZZ0015	EZZ0015	EZZ0015
Motor cable	EZZ0016	EZZ0016	EZZ0016	EZZ0016
Mounting kit for push-through technique	EJ0036	EJ0036	EJ0037	EJ0037

9300	EVS9325	EVS9326	EVS9327	EVS9328
Accessories	Order No.			
Mains choke	EZN3A0300H013	ELN3-0150H024-001	ELN3-0088H035-001	ELN3-0075H045
Mains filter				
Category C2 EN 61800-3	EZN3A0300H013	EZN3A0150H024	EZN3A0110H030 E82ZN22334B230 E82ZZ15334B230 1)	EZN3A0080H042 E82ZN22334B230
Category C1 EN 61800-3	EZN3B0300H013	EZN3B0150H024	E82ZN22334B230 E82ZZ15334B230 1) EZN3B0110H030U 2)	E82ZN22334B230 EZN3B0080H042
Brake chopper	EMB9352-E	EMB9352-E	EMB9352-E	EMB9352-E
Brake resistor	ERBD047R01k2	ERBD047R01k2	ERBD033R02k0	ERBD022R03k0
Shield mounting kit				
Control cable	EZZ0015	EZZ0015	EZZ0015	EZZ0015
Motor cable	EZZ0016	EZZ0016	EZZ0017	EZZ0017
Mounting kit for push-through technique	EJ0038	EJ0038	EJ0011	EJ0011

9300	EVS9329	EVS9330	EVS9331	EVS9332
Accessories	Order No.			
Mains choke	ELN3-0055H055	ELN3-0038H085	ELN3-0027H105	ELN3-0022H130
Mains filter				
Category C2 EN 61800-3	E82ZN30334B230 EZN3A0055H060	E82ZN55334B230 EZN3A0030H110 EZN3A0030H110N001 3)	E82ZN75334B230 EZN3A0022H150	E82ZN75334B230 EZN3A0022H150
Category C1 EN 61800-3	E82ZN30334B230 EZN3B0055H060	EZN3B0030H110	E82ZN75334B230 EZN3B0022H150	E82ZN75334B230 EZN3B0022H150
Brake chopper	EMB9352-E	2 × EMB9352-E	2 × EMB9352-E	3 × EMB9352-E
Brake resistor	ERBD018R03k0	2 × ERBD022R03k0	2 × ERBD022R03k0	3 × ERBD022R03k0
Shield mounting kit				
Control cable	EZZ0015	EZZ0015	EZZ0015	EZZ0015
Motor cable	EZZ0017	–	–	–
Mounting kit for push-through technique	EJ0011	EJ0010	EJ0010	EJ0009

13 Appendix

Contents

13.1 Glossary 13.1-1
13.1.1 Terminology and abbreviations used 13.1-1
13.2 Index 13.2-1

13.1 Glossary

13.1.1 Terminology and abbreviations used

🕮	Cross-reference to a chapter with the corresponding page number
AC	AC current or AC voltage
AIF	**Automation interface** AIF interface, interface for communication modules
CE	Communauté Européene
Controller	Any frequency inverter, servo inverter, or DC speed controller
Cxxxx/y	Subcode y of code Cxxxx (e. g. C0404/2 = subcode 2 of code C0404)
DC	DC current or DC voltage
DIN	Deutsches Institut für Normung(German Institute for Standardization)
Drive	Lenze controller in combination with a geared motor, a three-phase AC motor, and other Lenze drive components
EMC	Electromagnetic compatibility
EN	European standard
f_r [Hz]	Rated motor frequency
I_a [A]	Current output current
IEC	International Electrotechnical Commission
I_{mains} [A]	Mains current
I_{max} [A]	Maximum output current
IP	International Protection Code
IPC	Industrial PC
I_{PE} [mA]	Discharge current
I_r [A]	Rated output current
L [mH]	Inductance
M_r [Nm]	Rated motor torque
NEMA	National Electrical Manufacturers Association
P_{DC} [kW]	Power that can be additionally taken from the DC bus if a power-adapted motor is used for operation
PLC	Programmable control system
P_{loss} [W]	Power loss of inverter

P_r [kW]	Rated motor power
R [Ω]	Resistance
S_N [kVA]	Controller output power
U_{DC} [V]	DC supply voltage
UL	Underwriters Laboratories
U_M [V]	Output voltage
U_{mains} [V]	Mains voltage
VDE	Verband deutscher Elektrotechniker (Association of German Electrical Engineers)
Xk/y	Terminal y on terminal strip Xk (e. g. X5/28 = terminal 28 on terminal strip X5)

13.2 Index

A

Acceleration time, 8.5-2, 8.5-13

Accessories, 12-1
- General, 12.1-1
- Type-specific, 12.2-1

Activating the incremental encoder, 6.6-1

Actual motor current, 8.5-5

Actual motor voltage, 8.5-5

Actual speed value, 8.5-5

Additional setpoint, 8.5-4

Ambient conditions
- Climatic, 3.1-1
- electrical, 3.1-2
- Mechanical, 3.1-2

Analog inputs
- Configuration, 5.8-9
- Signals, 6.9-3
- terminal assignment, 5.8-9

Analog outputs
- Configuration, 6.9-4
- Signals, 6.9-4
- terminal assignment, 5.8-9

Application as directed, 1.2-1

B

Basic configuration, predefined, 8.5-2

Bus off, 8.2-3

C

Cable
- For control connections, 5.3-3
- for the motor connection, 5.2-8, 5.3-1

Cable cross-section, Motor cable, 5.2-9

Cable cross-sections, 10.3-1
- mains connection, 5.4-6, 5.5-5, 5.6-5, 5.7-5

CAN bus identifiers, 8.5-16

CE conformity, 1.2-1

CE-typical drive system, 5.4-1, 5.5-1, 5.6-1, 5.7-1

Central supply. ***Siehe DC-bus connection***

Changing parameters
- EMZ9371BC keypad, 7.2-7, 7.2-8
- Keypad EMZ9371BC, 7.2-4, 7.2-6, 7.2-9

Code, 7.1-1

Code table, 8.5-1

Commissioning, 6-1
- Before switching on, 6.2-1
- Entry of motor data, 6.5-3
- Setting of manual control (inching mode), Parameters, 6.10-1
- Switch on, 6.3-1

Commissioning steps, 6.16-3

Compensation equipment, Interaction with, 5.2-3

Configuration, 8-1
- Analog input signals, 6.9-3
- Analog output signals, 6.9-4
- Analog outputs, 6.9-4
- basic configurations, 8.5-1
- checking, 6.10-2
- Code table, 8.5-1
- Controller inhibit (DCTRL1-CINH), 6.4-1
- Digital input signals, 6.9-1
- Digital output signals, 6.9-2
- Digital outputs, 6.9-2
- Display functions, 9.1-1
- Monitoring
  Current load of controller (Ixt monitoring), 8.2-5
  DC-bus voltage, 8.2-11
  Heatsink temperature, 8.2-10
  Monitoring times for process data input objects, 8.2-3
- monitoring, 8.2-1
  bus off, 8.2-3
  current load of the motor (I2 x t monitoring), 2.2-1, 8.2-7
  motor temperature, 8.2-6
  reset node, 8.2-3
- Monitoring functions, Motor temperature, 2.2-1
- monitoring functions
  overview, 8.31
  responses, 8.2-1
- Relay output, 6.9-2
- Table of attributes, 8.7-1
- Thermal motor monitoring, 2.2-1

Conformity, 1.2-1

Control cable, 5.3-3

Control connections, Analog inputs, configuration, 5.8-9

Control parameter identification, automatic, 6.15-1

Control terminals, 5.8-1
- Changing the assignment of X5, 6.9-1
- Changing the assignment of X6, 6.9-1

Controller
- Adaptation to mains, 6.5-1
- Application as directed, 1.2-1
- Identification, 1.2-1

Controller inhibit
- Drive behaviour, 6.4-1
- Terminal assignment, 5.8-9

Current characteristics, current derating, 3.4-1

Current controller adjustment, 6.7-1

Current derating, 3.4-1

Current load of controller, Ixt monitoring, 8.2-5

Current load of the motor, I2 x t monitoring, 2.2-1, 8.2-7

D

DC supply, 5.3-1, 5.4-4, 5.5-3, 5.6-3, 5.7-3

DC-bus connection
- Central supply, 10.5-1
- Distributed supply, 10.4-1

DC-bus operation, 10-1
- Conditions, 10.2-1
- Several drives, 10-1

DC-bus voltage, 8.2-11, 8.5-5
- Monitoring, 8.2-11
- Overvoltage, 8.2-11
- Undervoltage, 8.2-11

Deceleration time, 8.5-2, 8.5-13

Definitions, Terms, 13.1-1

Device protection, 2.3-2

Diagnostics, 7.2-10, 9.1-1

Digital frequency input, connection to X9, 5.11-1

Digital frequency output, connection to X10, 5.11-1

Digital input signals, 6.9-1

Digital inputs, terminal assignment, 5.8-9

Digital inputs/outputs, Terminal assignment, 11.4-1

Digital output signals, 6.9-2

Digital outputs
- Configuration, 6.9-2
- terminal assignment, 5.8-9

Dimensions, 3.1-2, 4.1-3, 4.1-5, 4.2-3, 4.2-5, 4.3-3, 4.4-3

Discharge current, Mobile systems, 5.2-4

Display, operating status, 9.2-1

Display functions, 9.1-1

Disposal, 2.1-3

Distributed supply, *10.4-1*

Drive behaviour
- Controller inhibit, 6.4-1
- Influence of the motor cable length, 5.2-8

E

E.l.c.b., 5.2-3
- operation at, 5.2-3

Earth fault in motor cable (OC2), 8.2-4

Earth-leakage circuit breaker, 5.2-3
- operation at, 5.2-3

Electrical installation, system bus (CAN), 5.9-1

EMC, what to do in case of interferences, 5.3-6

Emergency-off, Controller inhibit, 6.4-1

EMZ9371BC keypad, changing parameters, 7.2-7, 7.2-8

EN 61000-3-2, 3.1-2, 5.2-1
- operation on public supply systems, 5.2-1

Entry of feed constants, 6.5-2

Entry of gearbox factors, 6.5-2

Entry of motor data, 6.5-3

Error analysis
- Via history buffer, 9.2-1
- via LECOM status word, 9.2-3

Error messages, 9.3-1
- causes and remedies, 9.3-1
- configuration, 8.31
- General, 9.3-1
- Resetting, 9.3-8

Exceeding of the maximum speed (NMAX), 8.2-4

Explanations, Code table, 8.5-1

External error (EEr), 8.2-11

F

FAIL-QSP, 8.2-1

Failure of a motor phase, 8.2-4

Fault analysis
- Via history buffer, 9.2-1
- via LECOM status word, 9.2-3

Fault messages
- causes and remedies, 9.3-1
- configuration, 8.31

Fault responses, 8.2-1

Feedback system, wiring, 5.10-1

Field controller, 8.5-6

Free spaces, 3.1-2

Function keys, keypad XT EMZ9371BC, 7.2-4

Functional test, safety function, 11.5-2, 11.5-5

Fuses, 10.3-1
- mains connection, 5.4-6, 5.5-5, 5.6-5, 5.7-5

G

General accessories, 12.1-1

General data, 3.1-1, 7.2-1

H

Harmonic currents
- Limitation according to EN 61000-3-2, 5.2-1
- limitation in accordance with EN 61000-3-2, 3.1-2

Heatsink temperature, monitoring, 8.2-10

History buffer, 9.2-1

Homing, 6.13-1
- manual, 6.13-3
- setting the parameters, 6.13-1

I

Identification, Controller, 1.2-1

Imax limit, 8.5-3

Incremental encoder
- At X8, 5.10-3, 6.6-1
- With TTL level, 5.10-3, 6.6-1

Input signals
- Analog, Configuration, 6.9-3
- Digital, Configuration, 6.9-1

Inputs
- Digital, Response times, 6.9-1
- KTY, 6.5-13
- PTC, 6.5-12

Installation
- Mechanical
  Cold plate technique, 4.1-4, 4.2-4
  Standard mounting 45 kW, 4.3-2
  Standard mounting 55 ... 75 kW, 4.4-2
  Thermally separated mounting (push-through technique) 45 kW, 4.3-3
  Thermally separated mounting (push-through technique) 55 ...75 kW, 4.4-3
- mechanical, thermally separated (push-through technique) 15 ... 30 kW, 4.2-3

Interaction with compensation equipment, 5.2-3

Interferences, eliminating EMC interferences, 5.3-6

IT system, 5.2-2

J

JOG setpoint, 8.5-4

K

Keypad EMZ9371BC, Changing parameters, 7.2-4, 7.2-6, 7.2-9

Keypad XT EMZ9371BC
- function keys, 7.2-4
- status display, 7.2-2

KSR safety relay, Terminal assignment, 5.8-9

KTY motor monitoring, 6.5-13

L

Leakage inductance, 8.5-6

LECOM, status word (C0150/C0155), 9.2-3

LED display, 9.2-1

Legal regulations, 1.2-1

Liability, 1.2-2

Light-emitting diodes, 9.2-1

Limit class C1/C2, 5.2-6

M

Main setpoint, 8.5-4

Mains, controller adaptation, 6.5-1

Mains choke, Assignment to standard device, 5.2-7, 5.4-7, 5.5-6, 5.6-6, 5.7-6

Mains connection, 5.3-1, 5.4-4, 5.5-3, 5.6-3, 5.7-3
- AC mains, 3.1-2
- DC mains, 3.1-2

Mains filter, Assignment to standard device, 5.2-7, 5.4-7, 5.5-6, 5.6-6, 5.7-6

Manufacturer, 1.2-1

Max. mains voltage range, 3.1-2

Maximum speed, 8.5-2

Mechanical installation
- Cold plate technique, 4.1-4, 4.2-4
- Standard mounting 45 kW, 4.3-2
- Standard mounting 55 ... 75 kW, 4.4-2
- thermally separated (push-through technique) 15 ... 30 kW, 4.2-3
- Thermally separated mounting (push-through technique) 45 kW, 4.3-3
- Thermally separated mounting (push-through technique) 55 ...75 kW, 4.4-3

Menu structure, XT EMZ9371BC keypad, 7.2-11

Message, 8.2-1

Mobile systems, 5.2-4

Monitoring, 8.2-1
- bus off, 8.2-3
- Current load of controller, Ixt monitoring, 8.2-5
- current load of the motor, I2 x t monitoring, 2.2-1, 8.2-7
- DC-bus voltage, 8.2-11
- Earth fault in motor cable (OC2), 8.2-4
- Exceeding of the maximum speed (NMAX), 8.2-4
- External error (EEr), 8.2-11
- Failure of a motor phase (LP1), 8.2-4
- Heatsink temperature, 8.2-10
- Monitoring times for process data input objects, 8.2-3
- motor cable overcurrent (OC1), 8.2-4
- motor temperature, 8.2-6
- reset node, 8.2-3
- responses, 8.2-1
  FAIL-QSP, 8.2-1
  message, 8.2-1
  TRIP, 8.2-1
  warning, 8.2-1

Monitoring functions
- Motor temperature, 2.2-1
- Overview, 8.31
- responses, 8.2-1

Monitoring times for process data input objects, 8.2-3

Monitorings
- configuration, 8.31
- possible fault responses, 8.31

Motor, thermal monitoring, with PTC thermistor, 6.5-12, 6.5-13

motor, Thermal monitoring, Sensorless, 2.2-1

Motor cable, 5.2-8, 5.3-1
- Cable cross-section, 5.2-9
- for trailing cable, 5.2-9
- Influence of the length, 5.2-8
- length, 3.1-2
- max. length, 5.2-7
- permanently installed, 5.2-9
- permissible length, 5.2-8
- Specification, 5.2-8

Motor cable overcurrent (OC1), 8.2-4

Motor connection, 3.1-2

Motor monitoring, 2.2-1

Motor potentiometer, 8.5-14

Motor protection, 2.3-2

Motor stator resistance, 8.5-6

Motor temperature, monitoring, 8.2-6

Mounting conditions
- Dimensions, 3.1-2
- Free spaces, 3.1-2
- Mounting place, 3.1-2
- Mounting position, 3.1-2
- Weights, 3.1-2

Mounting place, 3.1-2

Mounting position, 3.1-2

N

Nameplate, 1.1-3

Network of several drives, Function, 10.1-1

Noise-optimised operation, 8.5-3

O

Operating conditions, 3.1-1, 7.2-1
- Ambient conditions
  Climatic, 3.1-1
  Mechanical, 3.1-2
- ambient conditions, electrical, 3.1-2
- Mounting conditions
  Dimensions, 3.1-2
  Free space, 3.1-2
  Mounting place, 3.1-2
  Mounting position, 3.1-2
  Weight, 3.1-2

Operating mode of the motor control, 8.5-2

Operating status, display, 9.2-1

Operation, at earth-leakage circuit breaker, 5.2-3

Operation on public supply systems, EN 61000-3-2, 5.2-1

Optimisation of the controller and mains load, 5.2-5

Output signals
- Analog, Configuration, 6.9-4
- Digital, Configuration, 6.9-2

Outputs
- Analog, 6.9-4
- Digital, 6.9-2

Overview, Accessories, 12-1

Overvoltage threshold, DC-bus voltage, 8.2-11

P

Parameter sets, Management, 6.12-1

Parameter setting, 7-1
- code, 7.1-1
- with bus system, 7.1-2
- With XT EMZ9371BC keypad, 7.2-1

Parameters
- entering in the program set, 6.11-4
- for homing, 6.13-1
- for manual control (inching mode), 6.10-1
- travel profile, 6.11-1

Pollution, 3.1-1

Positioning program, processing a program set, 6.11-6

Power system, 3.1-2

Process input words, 8.5-40

Process output words, 8.5-40

Program set
- entering parameters, 6.11-4
- processing, 6.11-6

Protection against unexpected start-up, 11.1-1
- operating mode, 11.2-1
- safety relay, 11.3-1

Protection of persons, 2.3-1
- with earth-leakage circuit breaker, 5.2-3

PTC motor monitoring, 6.5-12

R

Rated motor power, 8.5-6

Rated motor voltage, 8.5-7

Reaction times of digital inputs, 6.9-1

Reduce noise emissions, 5.2-6

Relay output, Configuration, 6.9-2

Residual hazards, 2.3-1

Resolver, Connecting, 5.10-2, 6.6-1

Resolver polarity check, 6.8-2

Responses, 8.2-1
- FAIL-QSP, 8.2-1
- message, 8.2-1
- TRIP, 8.2-1
- warning, 8.2-1

Rotor position adjustment, 6.8-1, 6.8-2

S

Safe standstill, 11.1-1

Safe torque off, 11.1-1
- device variant with, 5.8-5
- device variant without, 5.8-4
- functional test, 11.5-2, 11.5-5
- operating mode, 11.2-1
- safety relay, 11.3-1

Safety, safety engineering, 11-1

Safety engineering, 11-1

Safety function
- functional test, 11.5-2, 11.5-5
- Safe torque off, 11.1-1

Safety instructions, 2-1

Safety relay, 11.3-1
- Connector X11
  Terminal assignment, 11.4-1
  Wiring, 11.4-1

Safety relay KSR, Terminal assignment, 11.4-1

Saving, parameter set, 6.12-1

Saving of parameter set, 6.12-1

Selection of motor type, 8.5-6

Selection of the feedback system, 8.5-3

Setting of manual control (inching mode), Parameters, 6.10-1

Setting the feedback system, 6.6-1

Setting the speed feedback, 6.6-1

Site altitude, 3.1-2

Status display, keypad XT EMZ9371BC, 7.2-2

Status word, 8.5-10
- LECOM (C0150/C0155), 9.2-3

Supply conditions, 5.4-6, 5.4-7, 5.5-5, 5.5-6, 5.6-5, 5.6-6, 5.7-5, 5.7-6, 10.3-1

Supply forms, IT system, 5.2-2

Supply forms / electrical supply conditions, 5.2-1

Switch on, 6.3-1

Switch-on, check before switching on, 6.2-1

System bus (CAN), wiring, 5.9-1

System error messages, 9.3-1
- General, 9.3-1
- Resetting, 9.3-8

T

Table of attributes, 8.7-1

Technical data, 3-1
- Current characteristics, device protection through current derating, 3.4-1
- General data, 3.1-1
- Operating conditions, 3.1-1

Terminal assignment
- analog inputs, 5.8-9
- analog ouputs, 5.8-9
- Controller inhibit, 5.8-9
- digital inputs, 5.8-9
- Digital inputs/outputs, 11.4-1
- digital outputs, 5.8-9
- KSR safety relay, 5.8-9
- Safety relay KSR, 11.4-1

Terminal data, 5.8-2, 11.4-1

Terms
- controller, 13.1-1
- Definitions, 13.1-1
- drive, 13.1-1

Thermal monitoring, motor
- Sensorless, 2.2-1
- with PTC thermistor, 6.5-12, 6.5-13

Tni current controller, 8.5-6

Tnn speed controller, 8.5-5

Travel profile
- entering parameters, 6.11-1
- structure, 6.11-1

TRIP, 8.2-1

Troubleshooting, 9.2-1

Troubleshooting and fault elimination, 9-1
- Monitoring, 8.2-1
  Current load of controller (Ixt monitoring), 8.2-5
  DC-bus voltage, 8.2-11
  Heatsink temperature, 8.2-10
  Monitoring times for process data input objects, 8.2-3
- monitoring
  bus off, 8.2-3
  current load of the motor (I2 x t monitoring), 2.2-1, 8.2-7
  motor temperature, 8.2-6
  reset node, 8.2-3
  responses, 8.2-1

Type-specific accessories, 12.2-1

U

Undervoltage threshold, DC-bus voltage, 8.2-11

V

Vpi current controller, 8.5-5

Vpn speed controller, 8.5-5

W

Warning, 8.2-1

Warranty, 1.2-2

Weights, 3.1-2

Wiring
- digital frequency input to X9, 5.11-1
- digital frequency output to X10, 5.11-1
- in the control cabinet, 5.3-4
- Mobile systems, 5.2-4
- outside of the control cabinet, 5.3-5
- system bus (CAN), 5.9-1

Wiring according to EMC, 5.4-1, 5.5-1, 5.6-1, 5.7-1

X

XT EMZ9371BC keypad, Menu structure, 7.2-11

© 07/2013

Lenze Automation GmbH
Hans-Lenze-Str. 1
D-31855 Aerzen
Germany

+49 (0)51 54 / 82-0

+49 (0)51 54 / 82 - 28 00

Lenze@Lenze.de

www.Lenze.com

Service

Lenze Service GmbH
Breslauer Straße 3
D-32699 Extertal
Germany

00 80 00 / 24 4 68 77 (24 h helpline)

+49 (0)51 54 / 82-11 12

Service@Lenze.de

EDSVS9332P ■ 13440811 ■ EN ■ 5.0-07/2013 ■ TD06

10 9 8 7 6 5 4 3 2 1